SHEET OF

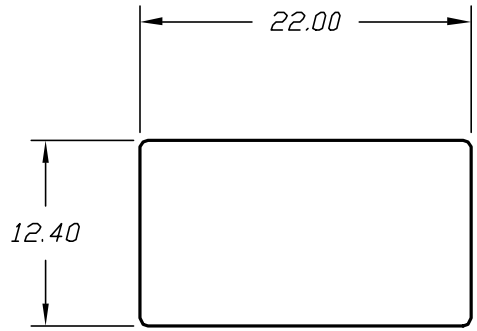

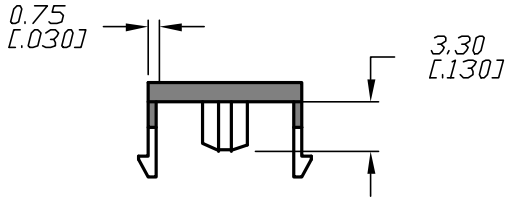

DETAIL A–A

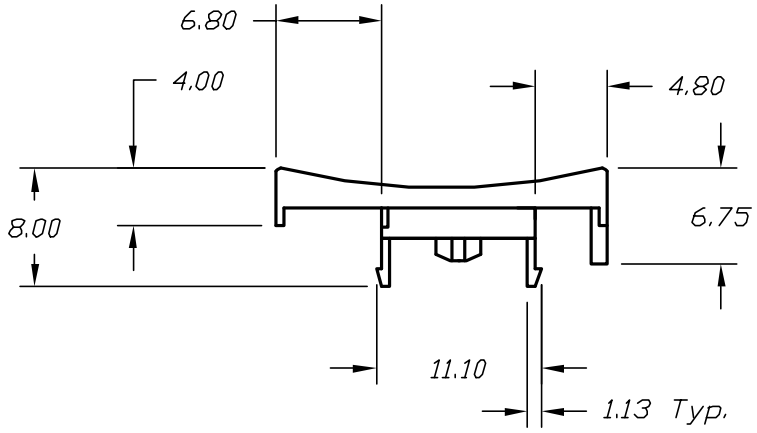

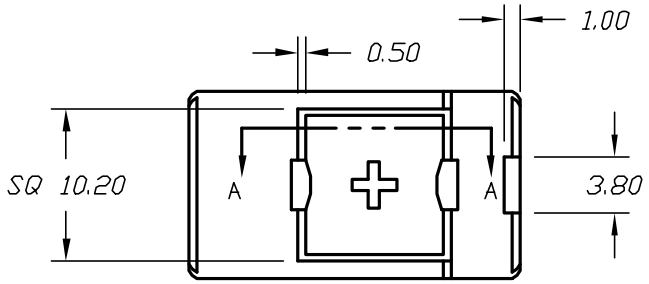

BOTTOM VIEW

NOTES:
1. ALL DIMENSIONS IN MM
2. GENERAL TOLERANCE:
   X.XX=±0.2
3. CAP MATERIAL: ABS
4. CAP COLOR: RED

REV.	ECN No.	DESCRIPTION	DATE	CHKD
B				
A	12767	RELEASED	2/4/03	CB

THE INFORMATION CONTAINED IN THIS DOCUMENT IS PROPRIETARY TO E-SWITCH AND IS NOT TO BE COPIED OR TRANSFERRED

E-SWITCH®

TITLE: 320,21 CAP RED

SCALE	DATE	DR	DWG	REV
2:1	--	--	B042103	A