B-233R 3PDT, 120 Amps, 115/200 VAC, 400 Hz



Features:
- 3PDT Main Contacts
- Mechanically Interlocked
- 115/200 VAC, 400 Hz
- 120 Amps
- High Reliability
- Meets many requirements of MIL-R-6106

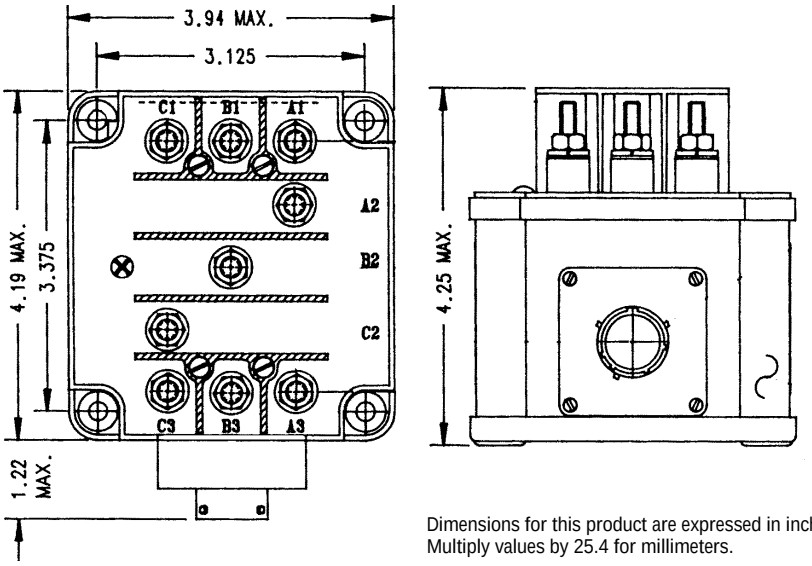

Dimensions for this product are expressed in inches.
Multiply values by 25.4 for millimeters.

CONTACTOR CONFIGURATION

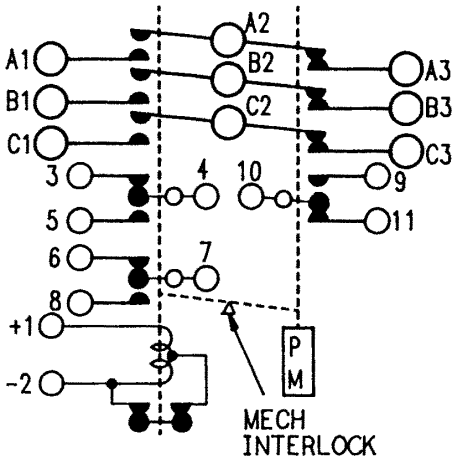

Notes:

PRODUCT SPECIFICATIONS	
Construction	Gasket Sealed, Vented
Main Contacts:	
Configuration	3PDT
Voltage (Nominal)	115/200 VAC, 400 Hz
Current (Resistive)	120 Amps
Auxiliary Contacts:	
Configuration	3-SPDT
Voltage (Nominal)	28 VDC
Current	
Resistive	5 Amps
Inductive	5 Amps
Lamp	2 Amps
Coil Data:	
Duty Cycle	Continuous
Voltage (Nominal)	28 VDC
Pick-Up Voltage	18 VDC Maximum
Drop-Out Voltage	1.5 - 7 VDC
Coil Current @ 28 VDC & +25°C	
In-Rush	2.5 Amps
Hold	0.25 Amps Maximum
Operating Temperature	-55°C to +71°C
Life:	
Electrical	50,000 Cycles
Mechanical	100,000 Cycles
Weight	3 Lbs. 3 Oz.

For factory-direct application assistance, contact the HARTMAN product team at (419) 521-9500, Fax (419) 526-2749.

© 2004 by Tyco Electronics Corporation. All Rights Reserved.
HARTMAN and TYCO are trademarks.