APPLICATION NOTE

AT15736: Atmel Smart Plug Getting Started Guide

ATSAMW25

Introduction

This application note aims to help users to get started with the Atmel® smart plug reference design kit.

Atmel smart plug is a highly integrated IoT solution featuring MCU, Wi-Fi® Connectivity, Security, and Sensing technology from Atmel.

The document also covers the usage of the accompanying Android app.

Features

- Get started with Atmel smart plug reference design kit
- Smart plug operation manual
- Smart plug Android app user manual

Figure 1. Atmel Smart Plug – US, CN, and EU Type

Table of Contents

Introduction **1**

Features **1**

1 Overview **3**

2 Smart Plug Setup **4**

2.1 Prerequisites 4

2.2 Setup Steps 4

3 Smart Plug Operation Maunal **5**

3.1 Smart Plug LED Indicators 5

3.2 Smart Plug Touch Button 5

4 Android App User Guide **6**

4.1 My Device Page 6

4.2 Add New Smart Plug 7

4.3 Add Shared Smart Plug 9

4.4 Smart Plug Control 9

4.4.1 Timing Setting 10

4.4.2 Historic Logs 11

4.4.3 Setting Page 11

4.4.4 Share Smart Plug 13

5 Revision History **15**

1 Overview

Atmel smart plug reference design is a turnkey solution with small form factor. There are three types of smart plugs available: US, CN, and EU type. The smart plug kits can be ordered from Atmel Store as other Atmel kits.

Atmel smart plug is an IoT edge node from an IoT system level of view. It acts as a Wi-Fi Access Point (AP) during initial setup by the Android app, and will afterwards act as a connected node on the home Wi-Fi network.

Figure 1-1. Smart Plug Work Flow

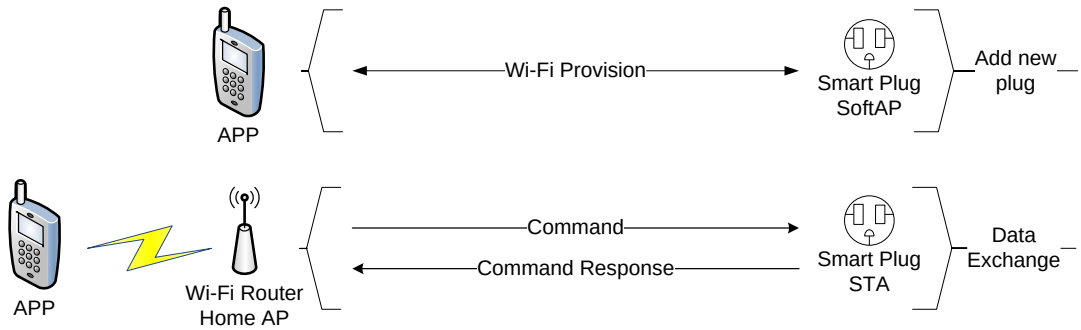

The block diagram of smart plug is shown in Figure 1-2 below.

Figure 1-2. Smart Plug Block Diagram

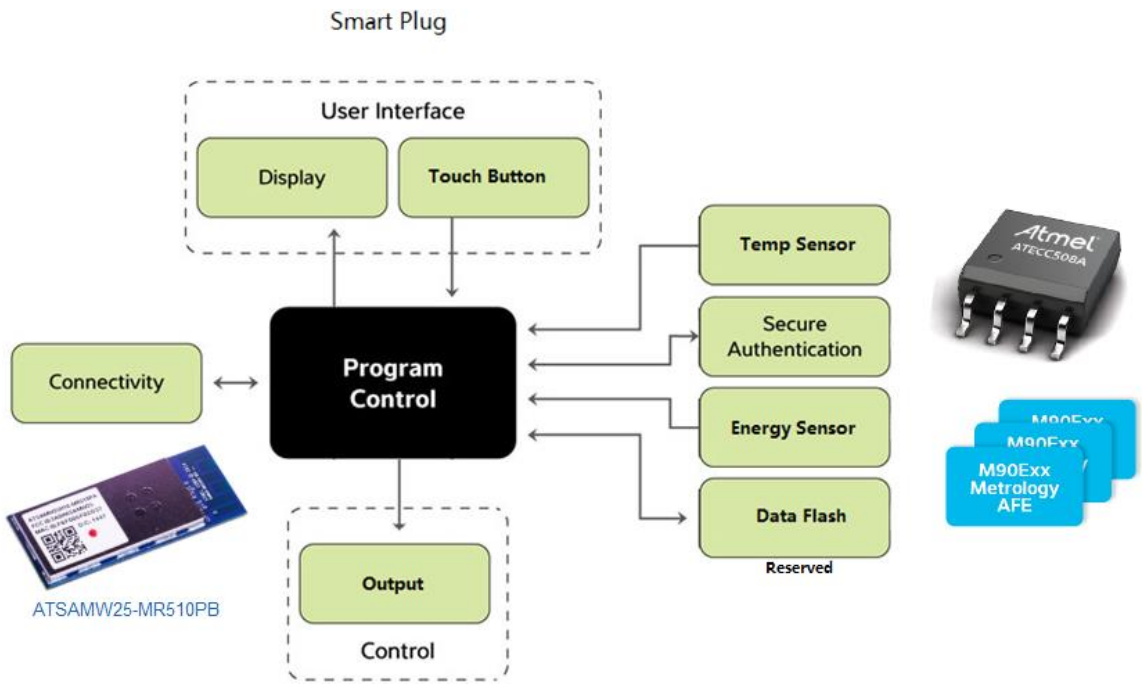

For more details about smart plug hardware design, refer to the Atmel application note AT16225: Atmel Smart Plug Hardware Design User Guide.

For more details about smart plug firmware design, refer to the Atmel application note AT15735: Atmel Smart Plug Firmware User Guide.

2 Smart Plug Setup

2.1 Prerequisites

To use this smart plug, the following prerequisites should be ready:

- Home Wi-Fi AP or Wi-Fi router
- Android device with Android 4.0 or higher
- Latest Atmel Smart Plug Android APK (download by scanning QR code or accessing web link below and install it on the Android phone

Figure 2-1. Atmel Smart Plug APK

To install from PC, access the following link:

https://play.google.com/store/apps/details?id=net.nanmu.atmel.smartplug

2.2 Setup Steps

Setting up the smart plug is easy. Before starting setup, we recommend reading chapters 3 and 4 to familiarize yourself with the operation of the smart plug and the Android app.

Here are the setup steps:

1. Plug the smart plug into an electrical socket.

   A factory new smart plug is working in SoftAP mode. When it is powered on for the first time, the Wi-Fi LED indicator will blink in yellow color. The output is off by default, and the output indicator will be red.

   The smart plug output can be controlled manually by the touch button on the smart plug. A single touch will toggle the output and a long touch (longer than 5s) will reset the smart plug to factory settings. To control the smart plug using the Android app, proceed with following steps.
2. Open the Atmel Smart Plug app installed on the Android device.
3. In the Android app, add the new device (Step-by-step instructions in Section 4.2).
4. After the smart plug is successfully added, the user can control the smart plug and check the smart plug status using the Android app.

3 Smart Plug Operation Maunal

Smart plug operation is easy and intuitive. The user interface consist of two LED indicators and a capacitive touch button. Atmel provides three types of smart plug to be used globally: US, CN, and EU type as shown in Figure 1.

3.1 Smart Plug LED Indicators

There are two indicators on the smart plug: the Wi-Fi indicator and the output indicator as shown in Figure 3-1 and Figure 3-2.

Wi-Fi indicator color codes:

- Yellow blink: Smart plug is in SoftAP mode, no device connected
- Yellow: Smart plug is in SoftAP mode, a device is connected
- Green blink: Smart plug is in STA mode, connecting to an Access Point (AP)
- Green: Smart plug is in STA mode, connected to an AP
- Red: Smart plug is in an error state

Smart plug output indicator color codes:

- Green: Output is on
- Red: Output is off

Figure 3-1. Wi-Fi Indicator on Smart Plug

Figure 3-2. Output Indicator on Smart Plug

3.2 Smart Plug Touch Button

There is a touch button on smart plug to manually control the output state. The touch button is integrated with the output indicator as shown in Figure 3-2. Touching the button will toggle the output. If the smart plug is in STA mode (connected to an AP), touching this button for longer than 5 seconds will reset the smart plug to factory settings.

4 Android App User Guide

The Atmel Smart Plug Android app is designed to work with the Atmel smart plug. In this chapter, the app usage will be described.

4.1 My Device Page

When opening the Atmel Smart Plug app you will be presented with the “My Devices” page. This page lists all your added Atmel smart plugs.

Figure 4-1. My Devices Page

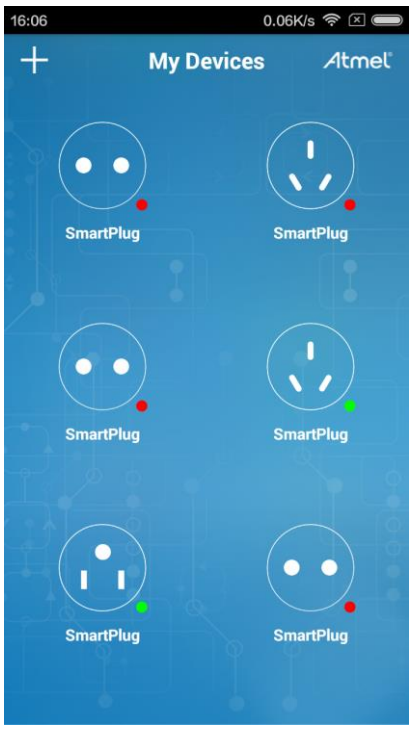

From the plug icon, it is easy to know the type of smart plug. As shown in Figure 4-2, the plug types from left to right are US, EU, and CN type.

Figure 4-2. Smart Plug Type

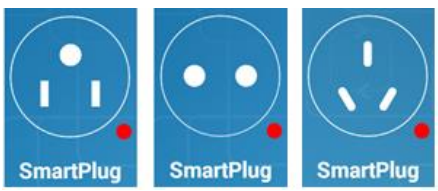

The colored dot at bottom right of each plug icon indicates online or offline status (Figure 4-3). A green dot means the smart plug is online while a red dot means the smart plug is currently offline. The online and offline status is automatically refreshed. It takes several seconds to refresh the status depending on the Wi-Fi network conditions.

Figure 4-3. Online/Offline Indicator

"My Devices" page is also the entry page of other function pages.

- To add a new smart plug, touch the "+" symbol at the top left of the page and select "Add Device". Refer to Section 4.2 for instructions on adding a new smart plug.
- To add a shared smart plug from other users, touch the "+" symbol at the top left of this page and select "Add Shared". Refer to Section 4.3 for instructions on adding a shared smart plug.
- For more details about a smart plug, touch the smart plug icon
- To show the APK information, touch "Atmel" logo at the top right of the page. The "About" page can also be opened in other pages by touching the "Atmel" logo.

Figure 4-4. About Page

4.2 Add New Smart Plug

Touching the "+" symbol at the top left in the "My Devices" page and select "Add Device". The app will scan and list new smart plugs nearby. If a new smart plug is found, it will be listed in "New Devices" page as shown in Figure 4-5. If no new smart plug is found, a message will be displayed.

Figure 4-5. New Devices Page

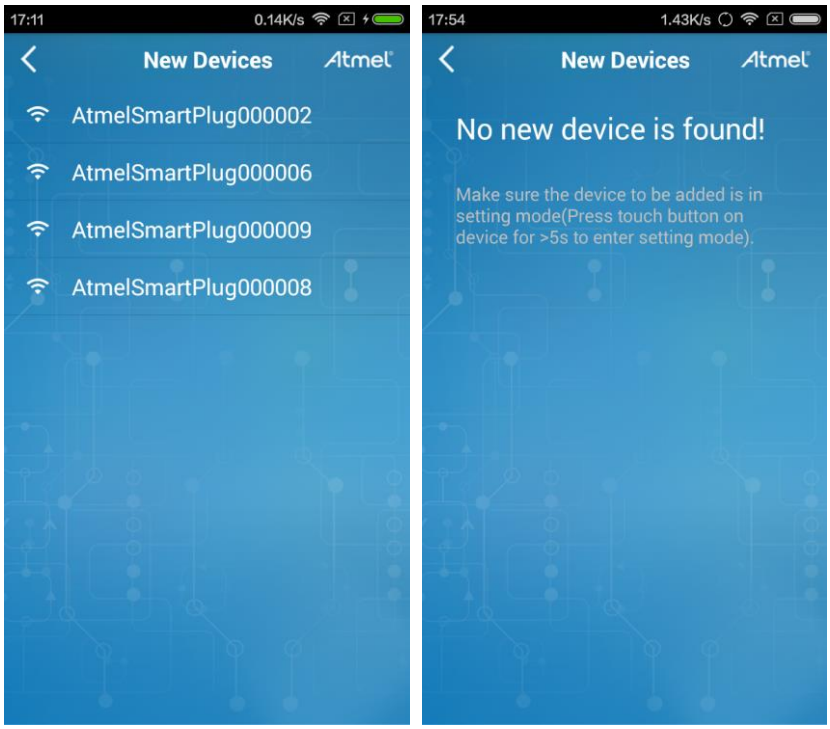

Selecting a smart plug from the list will disconnect the current Wi-Fi connection and connect to the SoftAP of the smart plug. After a successful connection to the smart plug SoftAP, the “Add New Device” page in Figure 4-6 will be shown.

Figure 4-6. Add New Device Page

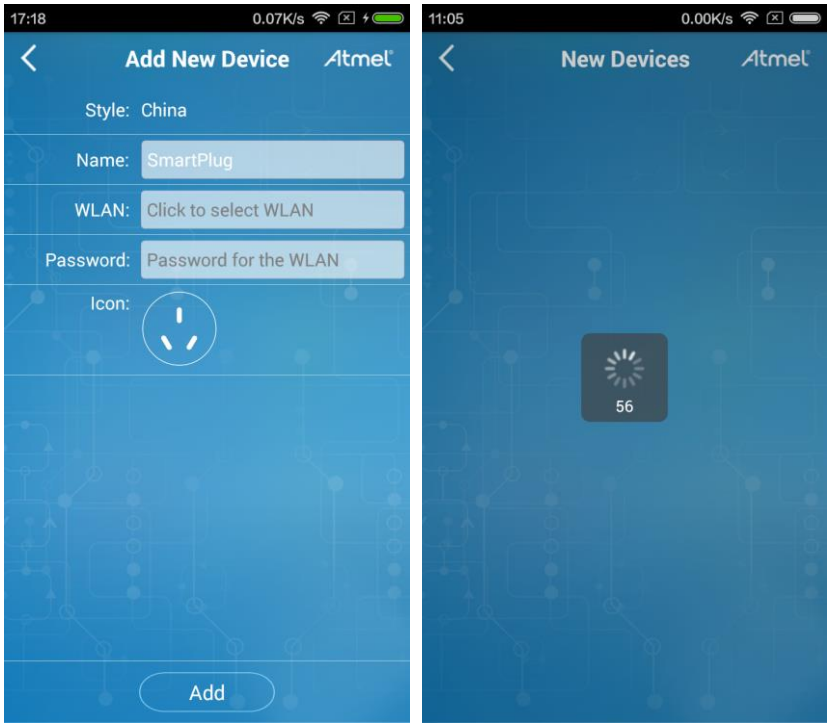

Touch the “WLAN” field and select the AP/Wi-Fi router to connect to. In the “Password” field, input the AP/Wi-Fi router password. Touch the “Add” button to write the configuration to the smart plug.

It will then return to “My Devices” page. The new smart plug icon will be displayed as shown in Figure 4-1 after it has finished connecting to the Wi-Fi and been discovered by the Android app. The adding new smart plug operation will fail if it exceeds a 60 seconds timeout. In this case, press the touch button on the smart plug for more than 5 seconds to reset the smart plug to SoftAP mode, and try adding it again.

4.3 Add Shared Smart Plug

Touch the “+” symbol at the top left in “My Devices” page and select “Add Shared”. This will use the device camera to scan a QR code generated by the sharing user. To generate a QR for sharing a smart plug, refer to Section 4.4.4.

When adding a new shared smart plug, make sure the phone is connected to the same network as the smart plug to be shared. Otherwise adding shared smart plug will fail.

Figure 4-7. Share Device Page

4.4 Smart Plug Control

Touching a smart plug icon in the “My Devices” page will enter the smart plug control page as shown in Figure 4-8.

The real-time output power (active power) is displayed at the top. By touching the “+” after “Active Power”, an extra line of the real-time output voltage, output current the accumulated energy figures will be displayed. Touching the “-” will collapse this extra line.

Smart plug on/off can be controlled by touching the power icon in the center. Green is ON and red is OFF - the same color scheme as the LED indicators on the smart plug.

At the bottom of the page, there are sub-pages of “Timing”, “History”, “Setting”, and “Share” functions, which are explained in the following sections.

Figure 4-8. Smart Plug Pages

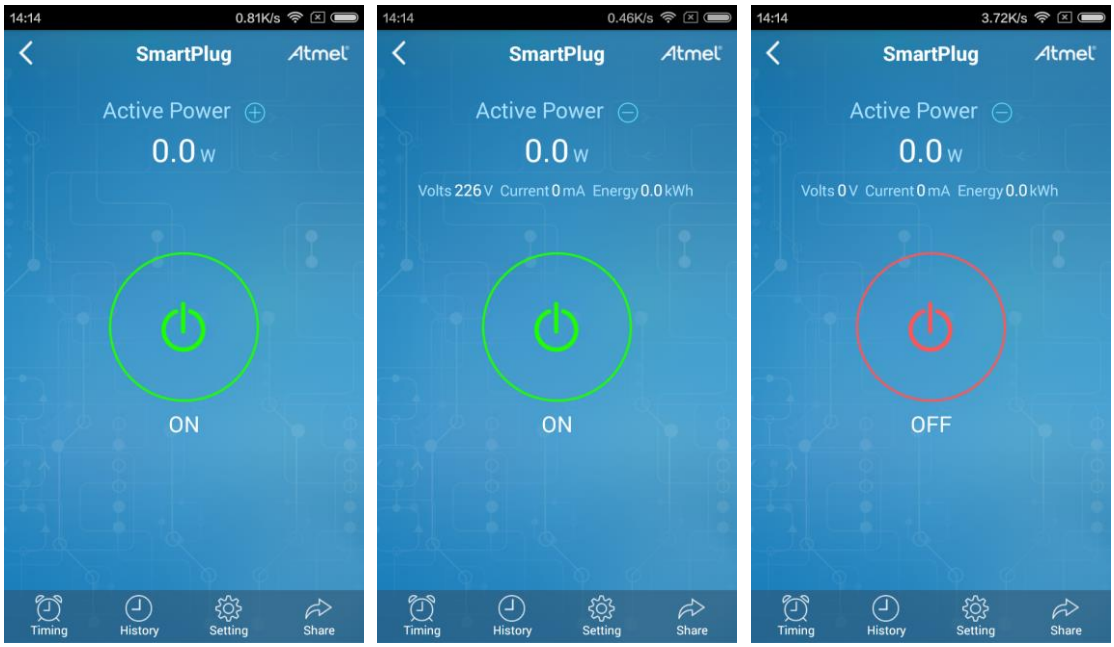

4.4.1 Timing Setting

Turning the smart plug ON/OFF can be scheduled in 7-day/24-hour format. There are totally 10 schedule settings that can be used. Touching the “Timing” menu in the “Smart Plug” page will enter the “Timing” page. Touching a schedule from the schedule list will show the “Timing Setting” page where a scheduled ON/OFF can be set. By touching “Repeat” in the “Timing Setting” page the action can be repeated on multiple days of the week. After setting up the schedule, touch “Save” to activate it. An example schedule is shown in Figure 4-9.

Figure 4-9. Timing Pages

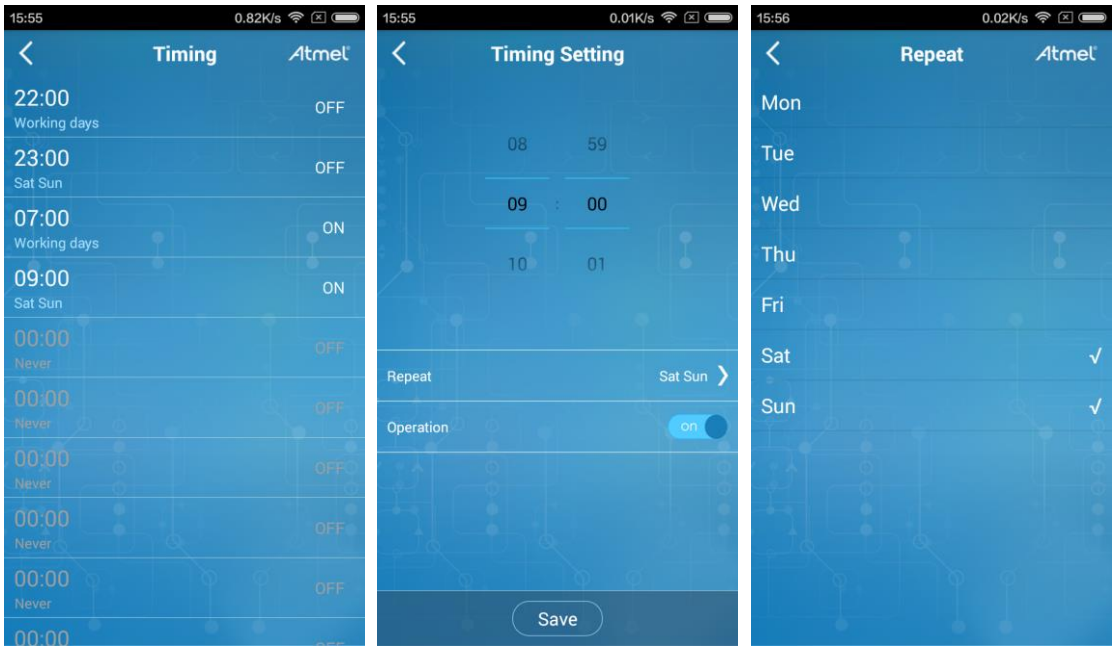

Note that the schedules will not be kept after the plug is powered off, so the user needs to set the schedule again if the smart plug has been disconnected from power.

When the Android app is connected to the smart plug, the calendar and time on the smart plug will be synchronized with the calendar and time of the Android device. This must be taken into consideration if a smart plug is shared between multiple devices with different calendar/time settings.

4.4.2 Historic Logs

There are two types of historic logs on the smart plug. One is the accumulated electrical energy, and the other is the ON/OFF operation. Touching the “History” menu on the “Smart Plug” page will show “History” page. On this page there are three columns: “Year Energy”, “Day Energy”, and “ON/OFF”. Figure 4-10 below shows an example log.

Figure 4-10. Historic Logs

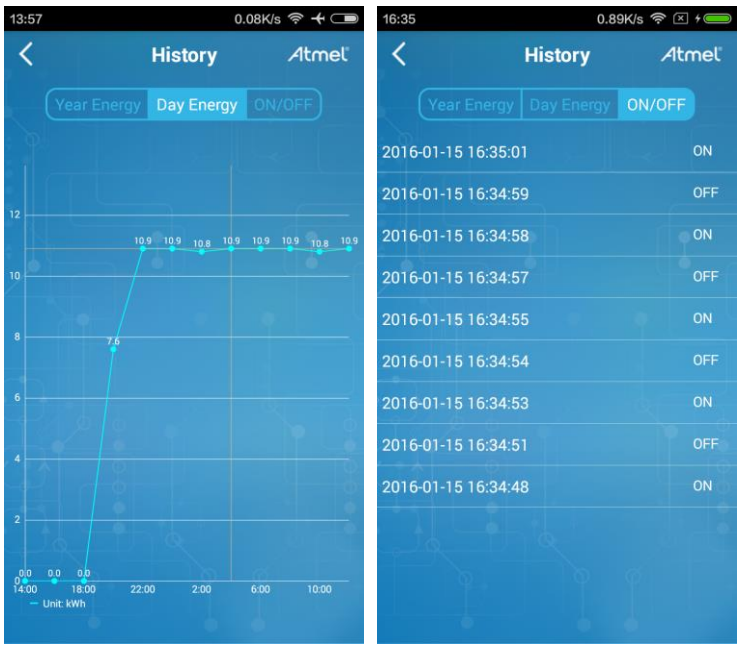

The “Year Energy” and “Day Energy” shows a graph of the electric energy consumption during the year (with month resolution) and in a day (2 hour resolution) respectively. The “ON/OFF” page records ON/OFF operations and the time of the operation.

4.4.3 Setting Page

The page shows the basic information of the smart plug. Refer to Figure 4-11 for an example of the Setting Page.

- Style (Plug Type): US, EU, or CN.
- Version: Host MCU firmware version in (major version).(minor version)(a/b) format.

The “a/b” shows the current application firmware area. Refer to the Atmel application note AT15735: Atmel Smart Plug Firmware User Guide to understand the MCU memory map and application firmware areas.

- SN: Smart plug serial number.

The second and third blocks of numbers from the end of the serial number are printed on the label on the back side of smart plug case.

Figure 4-11. Setting Page

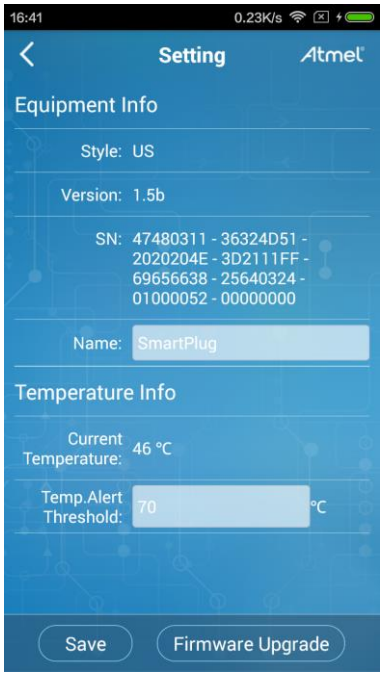

- Name: Smart plug name. Change the name by touching the field.
- Current Temperature: Temperature inside the smart plug measured by MCU on-chip temperature sensor.
- Temp. Alert Threshold: Temperature alert threshold.

Here the threshold can be changed to evaluate the temperature alert function. When the temperature exceeds this value, the smart plug will notify Android app (as shown in Figure 4-12) and shut the output off.

Figure 4-12. Over Temperature Alert

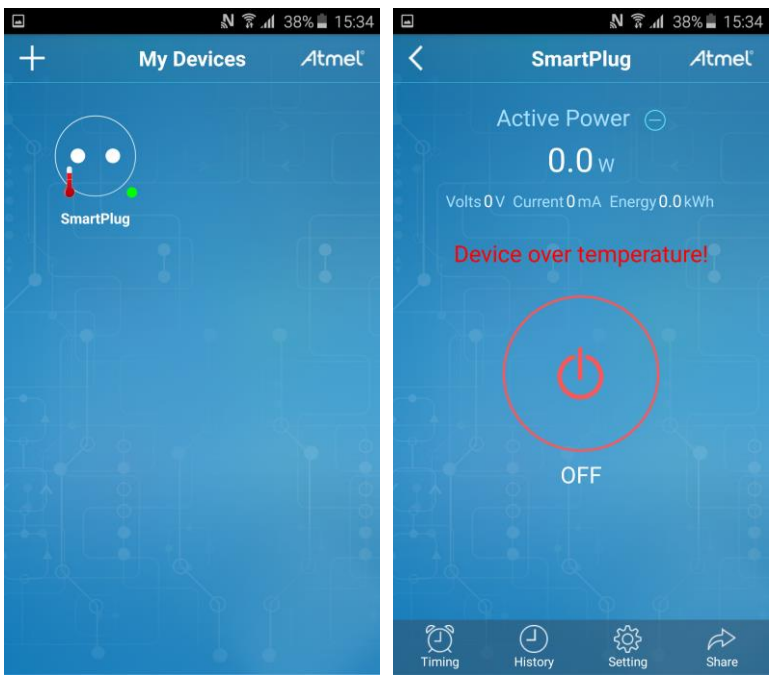

Over the air update (OTAU) can also be triggered from this page. By touching “Firmware Upgrade” in the bottom of this page, an Android system menu will pop up to choose the binary file used for OTAU. If the correct file is loaded, the OTAU will start and the progress of OTAU will be displayed in percentage as shown in Figure 4-13. After the OTAU is completed successfully the smart plug will do a warm reset and go online again. Compare the “Version” field before and after the OTAU to verify that the update completed successfully. The OTAU is designed for upgrade only – downgrading the firmware is not supported.

Figure 4-13. OTAU

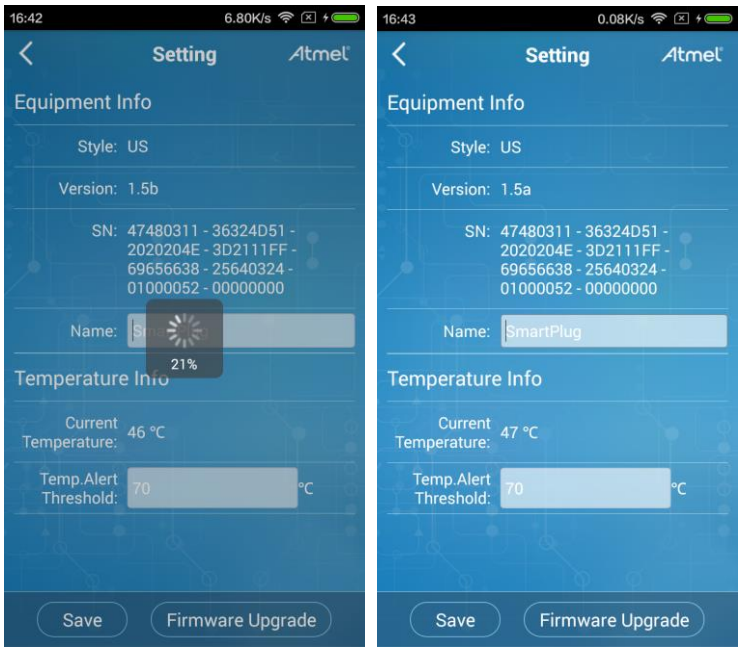

4.4.4 Share Smart Plug

The “Share” button on the “Smart Plug” page can be used to share the smart plug to other users. After entering the “Share Device” page as shown in Figure 4-14, the list of sharing records will be shown. In this reference design a smart plug can be shared by up to five users. A sharing record can be removed by sliding the record to the left and then selecting the delete icon. To easily remember the sharing record, it can be renamed by touching the record and filling the “Remark” field in the “Record Edit” page.

Figure 4-14. Sharing Device Pages

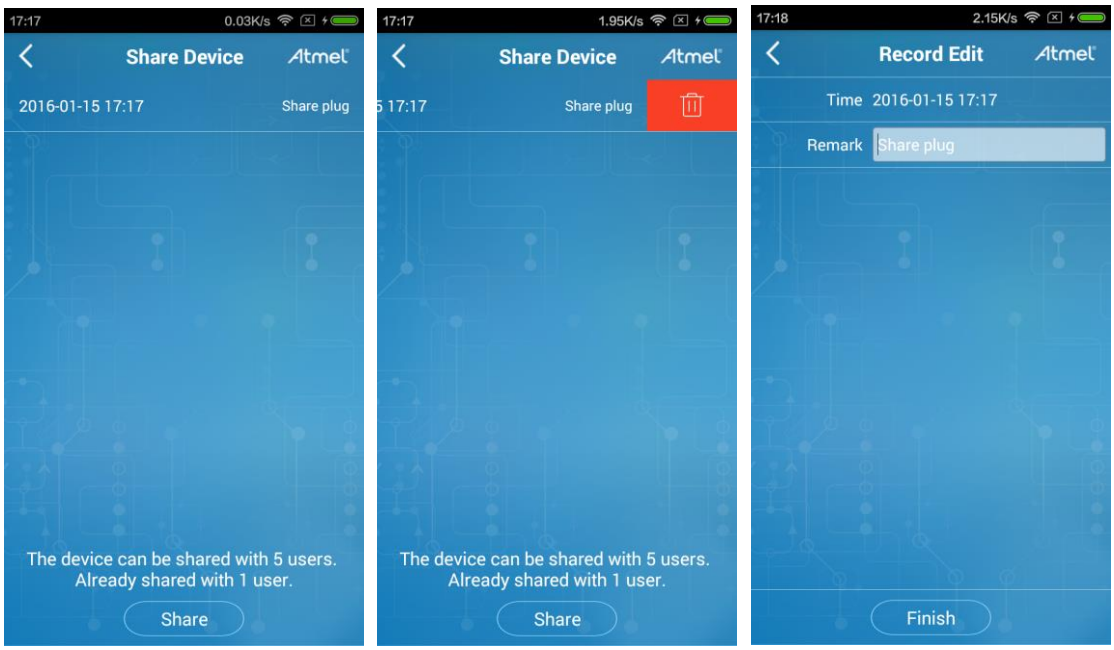

Touching the “Share” button will generate a unique QR sharing code. Refer to Section 4.3 for instructions on adding a shared smart plug on the Android app using the QR code.

Note that when leaving the QR code page, the same QR code will not be available again. For each touch of the “Share” button a unique QR code is generated. When the number of sharing codes reaches 5 the smart plug cannot be shared any more. To share with new users the sharing records have to be deleted to make the total number less than 5.

Figure 4-15. QR Code for Smart Plug Sharing

5 Revision History

Doc Rev.	Date	Comments
42686A	02/2016	Initial document release.

Enabling Unlimited Possibilities®

Atmel Corporation 1600 Technology Drive, San Jose, CA 95110 USA **T:** (+1)(408) 441.0311 **F:** (+1)(408) 436.4200 | **www.atmel.com**

© 2016 Atmel Corporation. / Rev.: Atmel-42686A-Atmel-Smart-Plug-Getting-Started-Guide_ApplicationNote_022016.

Atmel®, Atmel logo and combinations thereof, Enabling Unlimited Possibilities®, and others are registered trademarks or trademarks of Atmel Corporation in U.S. and other countries. ARM®, ARM Connected® logo, and others are the registered trademarks or trademarks of ARM Ltd. Other terms and product names may be trademarks of others.

DISCLAIMER: The information in this document is provided in connection with Atmel products. No license, express or implied, by estoppel or otherwise, to any intellectual property right is granted by this document or in connection with the sale of Atmel products. EXCEPT AS SET FORTH IN THE ATMEL TERMS AND CONDITIONS OF SALES LOCATED ON THE ATMEL WEBSITE, ATMEL ASSUMES NO LIABILITY WHATSOEVER AND DISCLAIMS ANY EXPRESS, IMPLIED OR STATUTORY WARRANTY RELATING TO ITS PRODUCTS INCLUDING, BUT NOT LIMITED TO, THE IMPLIED WARRANTY OF MERCHANTABILITY, FITNESS FOR A PARTICULAR PURPOSE, OR NON-INFRINGEMENT. IN NO EVENT SHALL ATMEL BE LIABLE FOR ANY DIRECT, INDIRECT, CONSEQUENTIAL, PUNITIVE, SPECIAL OR INCIDENTAL DAMAGES (INCLUDING, WITHOUT LIMITATION, DAMAGES FOR LOSS AND PROFITS, BUSINESS INTERRUPTION, OR LOSS OF INFORMATION) ARISING OUT OF THE USE OR INABILITY TO USE THIS DOCUMENT, EVEN IF ATMEL HAS BEEN ADVISED OF THE POSSIBILITY OF SUCH DAMAGES. Atmel makes no representations or warranties with respect to the accuracy or completeness of the contents of this document and reserves the right to make changes to specifications and products descriptions at any time without notice. Atmel does not make any commitment to update the information contained herein. Unless specifically provided otherwise, Atmel products are not suitable for, and shall not be used in, automotive applications. Atmel products are not intended, authorized, or warranted for use as components in applications intended to support or sustain life.

SAFETY-CRITICAL, MILITARY, AND AUTOMOTIVE APPLICATIONS DISCLAIMER: Atmel products are not designed for and will not be used in connection with any applications where the failure of such products would reasonably be expected to result in significant personal injury or death ("Safety-Critical Applications") without an Atmel officer's specific written consent. Safety-Critical Applications include, without limitation, life support devices and systems, equipment or systems for the operation of nuclear facilities and weapons systems. Atmel products are not designed nor intended for use in military or aerospace applications or environments unless specifically designated by Atmel as military-grade. Atmel products are not designed nor intended for use in automotive applications unless specifically designated by Atmel as automotive-grade.