AZ695

SENSITIVE SUBMINIATURE RELAY

FEATURES

- Extremely small footprint utilizing only 0.18 square inch of PCB area
- Thin vertical profile only 0.256" wide
- 1 Form A contact with up to 5 Amp switching capability
- High sensitivity, 100 mW pickup
- Dielectric strength 3000 Vrms contact to coil
- Coils to 24 VDC
- Epoxy sealed for automatic wave soldering and cleaning
- UL file E44211; CSA file 74461



CONTACTS

Arrangement	SPST (1 Form A)
Ratings	Resistive load: Max. switched power: 150 W or 1250 VA Max. switched current: 5 A Max. switched voltage: 150* VDC or 250 VAC Inductive load (p.f. = 0.40, L/R = 7 ms) 2 A at 250 VAC, 30 VDC
UL/CSA Ratings	5 A at 30 VDC resistive 5 A at 250 VAC general use 1/10 HP 120 VAC Note: If switching voltage is greater than 30 VDC, special precautions must be taken. Please contact the factory.
Material	Options: Silver cadmium oxide Silver cadmium oxide with gold plating
Resistance	< 30 milliohms initially (6 V, 1 A, voltage drop method)

COIL

Power	
At Pickup Voltage (typical)	100 mW
Max. Continuous Dissipation	550 mW at 20°C (68°F) ambient 420 mW at 40°C (104°F) ambient
Temperature Rise	25°C (45°F) at nominal coil voltage
Temperature	Max. 105°C (221°F)

NOTES

1. All values at 20°C (68°F).
2. Relay may pull in with less than “Must Operate” value.
3. Minimum permissible contact load:
   SCO contact: 100 mA at 5 VDC
   SCO contact with gold plating: 10 mA at 5 VDC
4. Specifications subject to change without notice.

GENERAL DATA

Life Expectancy **Mechanical** **Electrical**	Minimum operations 20 million operations 1 X 10^5 at 5 A, 30 VDC or 250 VAC Res.
Operate Time (typical)	6 ms at nominal coil voltage
Release Time (typical)	3 ms at nominal coil voltage (with no coil suppression)
Dielectric Strength (at sea level for 1 min.)	750 Vrms between open contacts 3000 Vrms contact to coil
Insulation Resistance	100 megohms min. at 20°C, 500 VDC, 50% RH
Dropout	Greater than 10% of nominal coil voltage
Ambient Temperature **Operating** **Storage**	At nominal coil voltage -40°C (-40°F) to 70°C (158°F) -40°C (-40°F) to 105°C (221°F)
Vibration	0.062" DA at 10–55 Hz
Shock	10 g
Enclosure	P.B.T. polyester
Terminals	Tinned copper alloy, P.C.
Max. Solder Temp.	270°C (518°F)
Max. Solder Time	5 seconds
Max. Solvent Temp.	80°C (176°F)
Max. Immersion Time	30 seconds
Weight	3 grams

AMERICAN ZETTLER, INC. www.azettler.com
75 COLUMBIA • ALISO VIEJO, CA 92656 • PHONE: (949) 831-5000 • FAX: (949) 831-8642 • E-MAIL: SALES@AZETTLER.COM
7/12/01W

AZ695

RELAY ORDERING DATA

COIL SPECIFICATIONS				ORDER NUMBER	
Nominal Coil VDC	Max. Continuous VDC	Coil Resistance ± 10%	Must Operate VDC	SCO Contact	SCO with Gold Plating Contact
5	8.4	125	3.5	AZ695–5	AZ695–5G
6	10.1	180	4.2	AZ695–6	AZ695–6G
9	15.2	405	6.3	AZ695–9	AZ695–9G
12	20.2	720	8.4	AZ695–12	AZ695–12G
18	29.5	1,620	12.6	AZ695–18	AZ695–18G
24	40.5	2,880	16.8	AZ695–24	AZ695–24G

MECHANICAL DATA

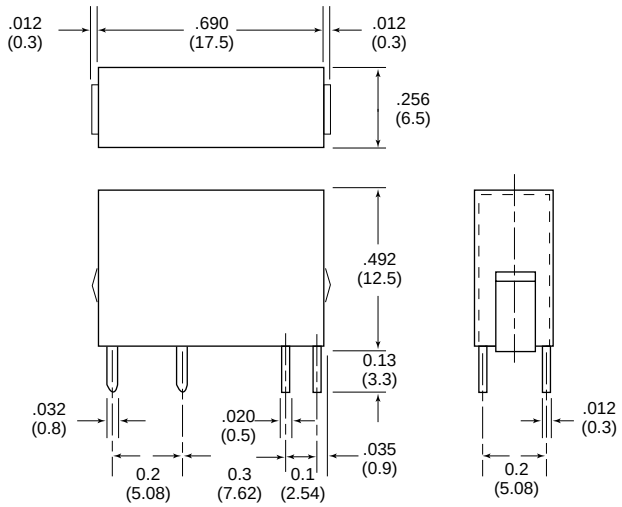

PC BOARD LAYOUT

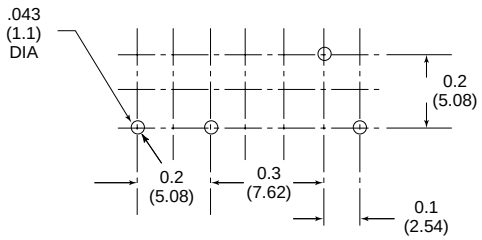

Viewed toward terminals

WIRING DIAGRAM

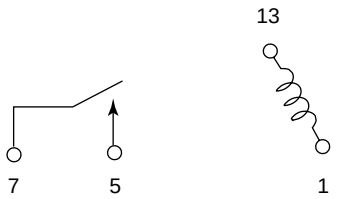

Viewed toward terminals

Dimensions in inches with metric equivalents in parentheses. Tolerance: ± .010"

AMERICAN ZETTLER, INC. www.azettler.com

75 COLUMBIA • ALISO VIEJO, CA 92656 • PHONE: (949) 831-5000 • FAX: (949) 831-8642 • E-MAIL: SALES@AZETTLER.COM