Features

- ESD protection for one line with bi-direction
- Provide transient protection for one line to
  IEC 61000-4-2 (ESD) ±25kV (air/contact)
  IEC 61000-4-4 (EFT) 60A (5/50ns)
  IEC 61000-4-5 (Lightning) 2A (8/20μs)
- Suitable for, **36V** and below, operating voltage applications
- Fast turn-on and low clamping voltage
- Solid-state silicon-avalanche and active circuit triggering technology
- ***Green part***

Applications

- Chip-On-Glass (COG) panels
- Power line protection
- Control signal lines protection
- Monitors and flat panel displays
- OLED panels
- Industrial system
- Set-Top box

Description

AZ4836-01L is a design which includes a bi-directional ESD rated clamping cell to protect one power line, or one control line, or one low-speed data line in an electronic system. The AZ4836-01L has been specifically designed to protect sensitive components which are connected to power and control lines from over-voltage damage caused by Electrostatic Discharging (ESD), Electrical Fast Transients (EFT), Lightning, and Cable Discharge Event (CDE).

AZ4836-01L is a unique design which includes proprietary clamping cell in a single package. During transient conditions, the proprietary clamping cell prevents over-voltage on the power line or control/data lines, protecting any downstream components.

AZ4836-01L may be used to meet the ESD immunity requirements of IEC 61000-4-2, Level 4 (±15kV air, ±8kV contact discharge).

Circuit Diagram / Pin Configuration

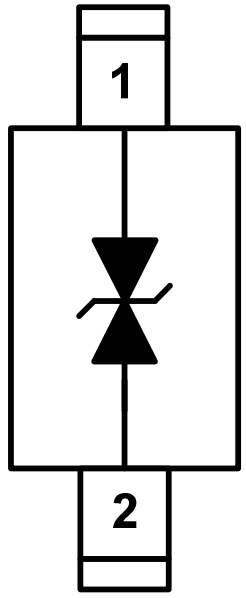

SOD323-2L (Top View)

SPECIFICATIONS

ABSOLUTE MAXIMUM RATINGS (T_A= 25°C, unless otherwise specified)			
PARAMETER	**SYMBOL**	**RATING**	**UNIT**
Peak Pulse Current (tp=8/20μs)	I_{PP}	2	A
Operating Voltage	V_{DC}	±39.6	V
ESD per IEC 61000-4-2 (Air) ESD per IEC 61000-4-2 (Contact)	V_{ESD-1} V_{ESD-2}	±25 ±25	kV
Lead Soldering Temperature	T_{SOL}	260 (10 sec.)	°C
Operating Temperature	T_{OP}	-55 to +125	°C
Storage Temperature	T_{STO}	-55 to +150	°C

ELECTRICAL CHARACTERISTICS						
PARAMETER	**SYMBOL**	**CONDITION**	**MIN**	**TYP**	**MAX**	**UNIT**
Reverse Stand-Off Voltage	V_{RWM}	T = 25°C.	-36		36	V
Reverse Leakage Current	I_{Leak}	V_{RWM} = ±36V, T = 25°C.			1	μA
Reverse Breakdown Voltage	V_{BV}	I_{BV} = 1mA, T = 25°C.	40			V
ESD Clamping Voltage (Note 1)	V_{CL-ESD}	IEC 61000-4-2, +8kV (I_{TLP} = 16A), contact mode, T = 25°C.		47		V
Channel Input Capacitance	C_{IN}	V_{IN} = 0V, f = 1MHz, T = 25°C.		13	15	pF

Note 1: ESD Clamping Voltage was measured by Transmission Line Pulsing (TLP) System.

TLP conditions: Z_0= 50Ω, t_p= 100ns, t_r= 1ns.

Typical Characteristics

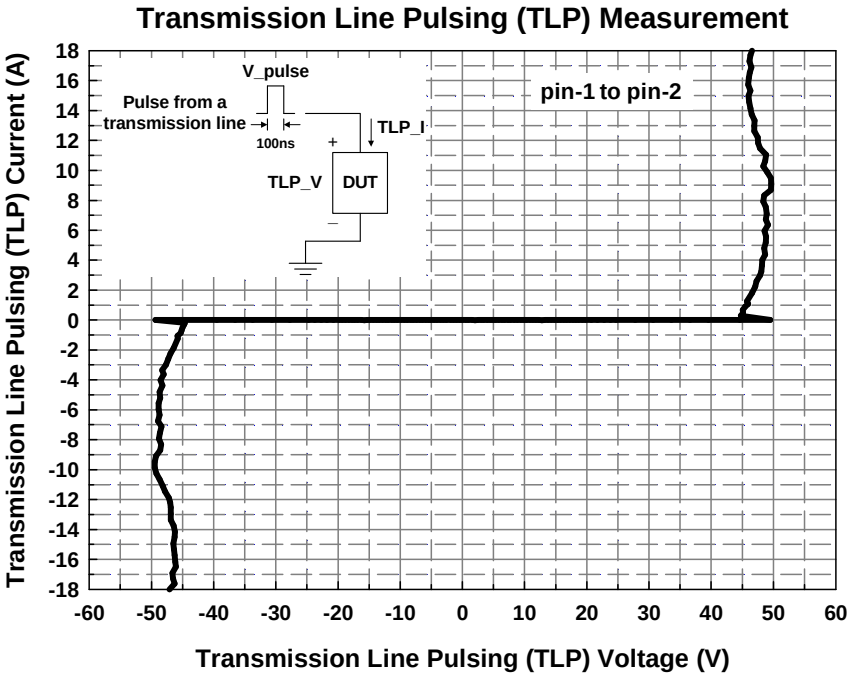

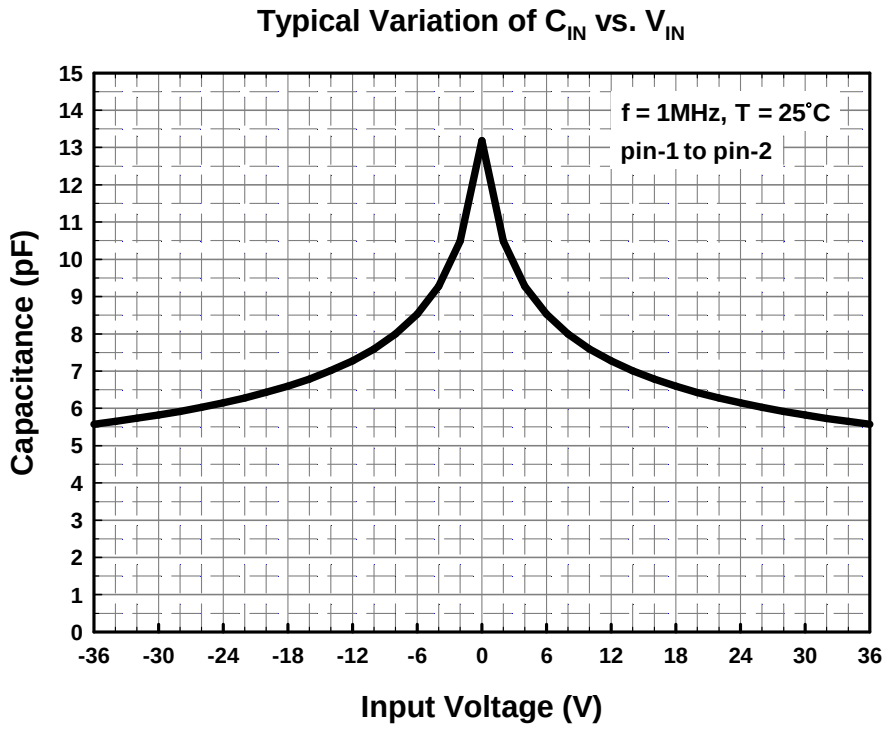

Application Information

The AZ4836-01L is designed to protect one line against system ESD/EFT/Lightning pulses by clamping it to an acceptable reference. It provides bi-directional protection.

The usage of the AZ4836-01L is shown in Fig. 1. Protected line, such as data line, control line, or power line, is connected at pin 1. The pin 2 is connected to a ground plane on the board. In order to minimize parasitic inductance in the board traces, all path lengths connected to the pins of AZ4836-01L should be kept as short as possible.

In order to obtain enough suppression of ESD induced transient, a good circuit board is critical. Thus, the following guidelines are recommended:

- Minimize the path length between the protected lines and the AZ4836-01L.
- Place the AZ4836-01L near the input terminals or connectors to restrict transient coupling.
- The ESD current return path to ground should be kept as short as possible.
- Use ground planes whenever possible.
- NEVER route critical signals near board edges and near the lines which the ESD transient easily injects to.

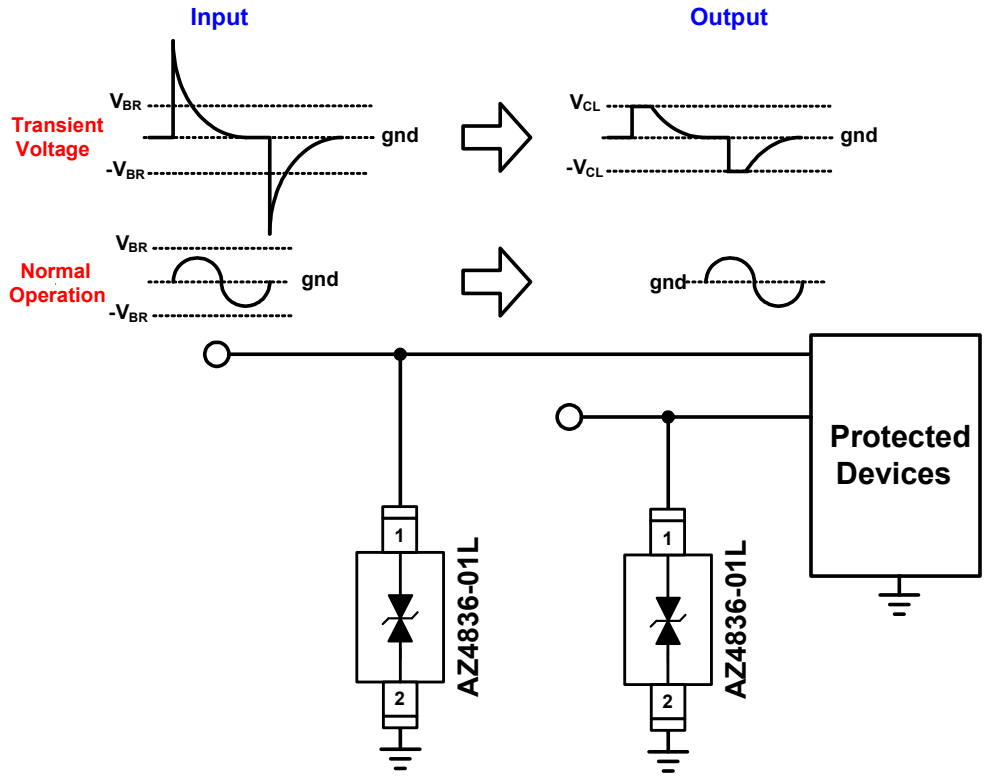

Fig. 1 ESD protection scheme by using AZ4836-01L.

Mechanical Details

SOD323-2L

PACKAGE DIAGRAMS

TOP VIEW

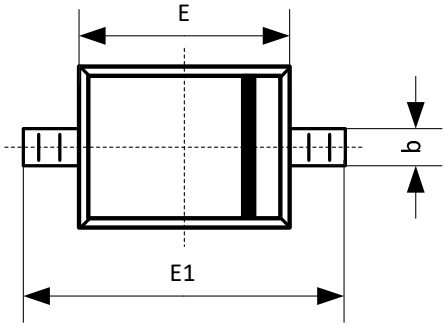

SIDE VIEW

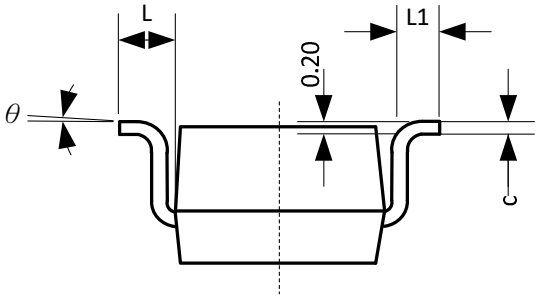

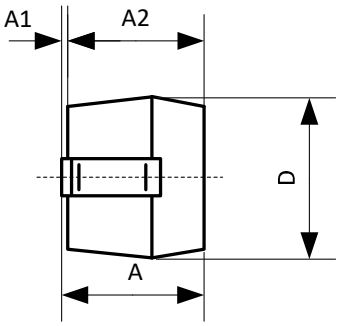

PACKAGE DIMENSIONS

SYMBOL	MILLIMETERS	
	MIN.	MAX.
A	0.80	1.00
A1	0.00	0.10
A2	0.80	0.90
b	0.25	0.35
c	0.08	0.15
D	1.20	1.40
E	1.60	1.80
E1	2.50	2.70
L	0.475REF	
L1	0.25	0.40
θ	0	8

LAND LAYOUT

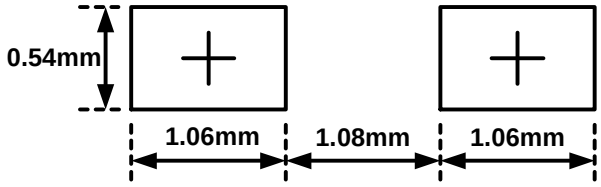

Notes:

This LAND LAYOUT is for reference purposes only. Please consult your manufacturing partners to ensure your company's PCB design guidelines are met.

MARKING CODE

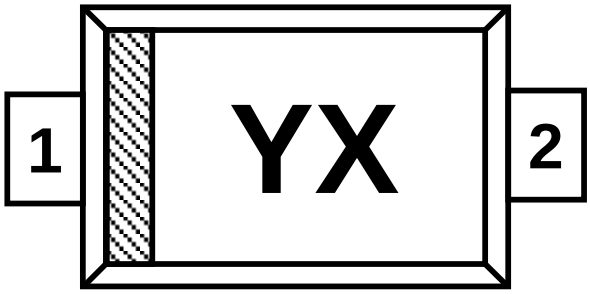

TOP View

Part Number	Marking Code
AZ4836-01L.R7G (Green Part)	YX

Note. Green means Pb-free, RoHS, and Halogen free compliant.

Y = Device Code
X = Date Code

Ordering Information

PN#	Material	Type	Reel size	MOQ	MOQ/internal box	MOQ/carton
AZ4836-01L.R7G	Green	T/R	7 inch	3,000/reel	4 reels=12,000/box	6 boxes=72,000/carton

Revision History

Revision	Modification Description
Revision 2019/08/27	Formal Release.