AXTAL ADVANCED XTAL PRODUCTS

Specification	AXX5032	Issue: 02	Date: 2006-03-18

Oscillator type : Quartz Crystal Unit in SMD package 5.0x3.2 mm 4pad

RoHS compliant

Parameter	min.	typ.	max.	Unit	Condition
Frequency range	10		50	MHz	
Actual frequency f_0				MHz	
Crystal cut / Vibration mode		AT			
Load capacitance C_L		8 pF, 10 pF or Series			
Overtone		1			
Adjustment tolerance		±10 / ±30 / ±50/ ±100		ppm	@ 25°C +-5°C
Frequency stability				ppm	Overall (Note 1)
Frequency stability over temperature range		± 10 ~ ± 100		ppm	See table below
operating temperature range (steady state)	0 -10 -20 -40		+50 +60 +70 +85	°C °C °C °C	
long term (aging)			±5	ppm	
Resonance resistance R_r			150 100 70 50	Ω Ω Ω Ω	@ 10 ~ 12 MHz @ >12 ~ 16 MHz @ >16 ~ 30 MHz @ >30 ~ 50 MHz
Motional capacitance C_1				fF	
Static capacitance C_0			7	pF	
Drive level		50	500	µW	
Insulation resistance	500			MΩ	100 V DC
Storage temperature range	-40		+85	°C	
Enclosure (see drawing)		5.0 x 3.2 x 1.1			IEC 61637
marking		Frequency (MHz) + Date Code			
Packing		Tape & Reel			IEC 60286-3

Notes:

1. Overall frequency stability = initial tolerance + temp. stability + aging (1st year)
2. Terminology and test conditions are according to IEC standard IEC60122-1, unless otherwise stated
3. Measurement technique according to IEC 60444-5 or equivalent

Frequency vs. Temperature Stabilities

0° ~ +50°C	-10° ~ +60°C	-20° ~ +70°C	-40 ~ +85°C
± 10 ppm	± 15 ppm	± 20 ppm	± 30 ppm
± 30 ppm	± 30 ppm	± 30 ppm	± 50 ppm
± 50 ppm	± 50 ppm	± 50 ppm	± 100 ppm
± 100 ppm	± 100 ppm	± 100 ppm	

Enclosure drawing

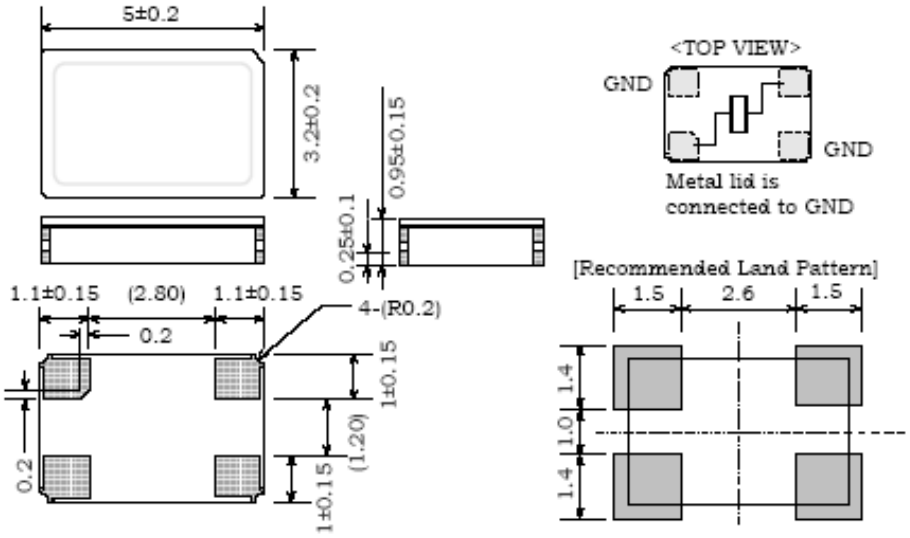

Environmental conditions

Test	IEC 60068 Part ...	IEC 61178-1 clause ...	Test conditions
Visual inspection, dimensions		4.5 4.6	Enclosure styles as in IEC 60122-3, if applicable
Sealing tests	2-17	4.8.2	Gross leak: Test Qc, Fine leak: Test Qk
Solderability Resistance to soldering heat	2-20	4.8.3	Test Ta (235 ± 5)°C Method 1 Test Tb Method 1A, 5s
Shock	2-27	4.8.8	Test Ea, 3 x per axes 100g, 6 ms half-sine pulse
Bump	2-29	4.8.6	Test Eb, 4000 bumps per Axes, 40g, 6 ms
Free fall	2-32	4.8.9	Test Ed procedure 1, 2 drops from 1m height
Vibration, sinusoidal	2-6	4.8.7	Test Fc, 30 min per axes, 10 Hz - 55 Hz 0,75mm; 55 Hz - 1 kHz, 10g
Rapid change of temperature	2-14	4.8.5	Test Na, 10 cycles at extremes of operating temperature range
Dry heat	2-2	4.8.11	Test Ba, 16 h at upper temperature indicated by climatic category
Damp heat, cyclic	2-30	4.8.12	Test Db variant 1 severity b), 55°C/95% r.H., 6 cycles
Cold	2-1	4.8.13	Test Aa, 2 h at lower temperature indicated by climatic category
Climatic sequence	1-7	4.8.14	Sequence of 4.8.11, 4.8.12 (1st cycle), 4.8.13, 4.8.12 (5 cycles)
Damp heat, steady state	2-3	4.8.15	Test Ca, 56 days
Endurance tests - ageing - extended aging		 4.9.1 4.9.2	 30 days @ 85°C 1000h, 2000h, 8000h @85°C