AXTAL ADVANCED XTAL PRODUCTS

| Specification | AXQCM500-Ag-Al | Rev.: 3 | Date: 2014-06-02 |
|---|---|---|---|

**Type : Quartz Crystal Microbalance Element (Monitor Crystal)**

**(Electrodes Maxtek Style)**

| Parameter | min. | typ. | max. | Unit | Condition |
|---|---|---|---|---|---|
| **Nominal frequency** | | 5.000 | | MHz | |
| **Adjustment frequency** | | 4.960 | | MHz | |
| **Crystal cut** | | AT | | | |
| **Overtone** | | 1 | | | |
| **Adjustment tolerance** | -7 | | +7 | kHz | @ 25°C |
| **Frequency stability** | | | | | |
| | | | | | |
| **Resonance resistance $R_r$** | | | 15 | Ω | |
| **Motional capacitance $C_1$** | | | | fF | |
| **Shunt capacitance $C_0$** | | | 7 | pF | |
| **Drive level** | | 100 | | µW | |
| **Operating temperature range** | 0 | | +70 | °C | |
| **Storage temperature range** | -40 | | +105 | °C | |
| **QCM diameter** | | 13.97+0-0.03 | | mm | |
| **Blank surface quality** | | Fine lapped | | | |
| **Electrode diameter Side A** | | 13.3 ± 0.1 | | mm | Fully plated |
| **Electrode material Side A** | | Cr-Ag-Al | | | |
| **Electrode diameter Side B** | | 6.0 ± 0.05 | | mm | See drawing |
| **Electrode material Side B** | | Cr-Ag-Al | | | |

**Side A (Plane)**

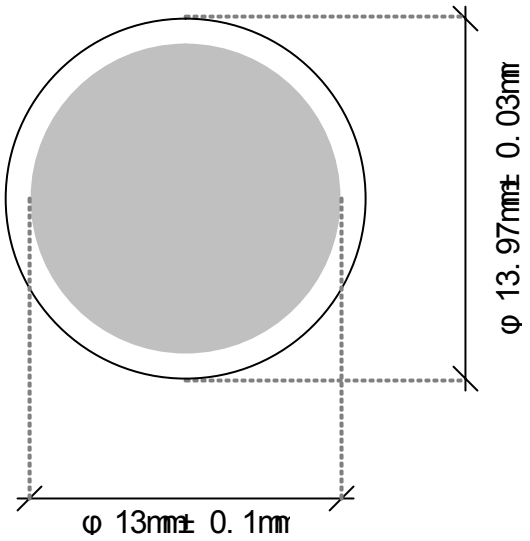


**Side B ( Convex)**

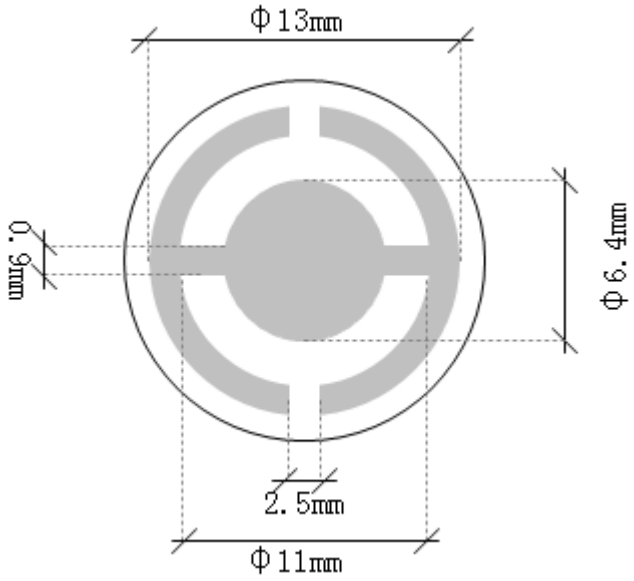


**Ordering Code:**

| Model (Specification) | Frequency [MHz] |
|---|---|
| AXQCM500-Ag-Al | 4.960 |


AXTAL GmbH & Co. KG
Roemerring 9
D-74821 Mosbach
Germany





www.axtal.com
fon: +49 (6261) 939834
fax: +49 (6261) 939836
E-mail: info@axtal.com

## Revision History

| Rev. | Drawing | Date [dd.mm.yyyy] | Remarks | Author | Checked |
|---|---|---|---|---|---|
| 2.1 | D0 | 16.10.2013 | | EP | BN |
| 3 | D1 | 02.06.2014 | Editorial changes | BN | BN |