AWT6241

HELP3™ UMTS/TD-SCDMA
Linear Power Amplifier Module
Data Sheet - Rev 2.4

FEATURES

- InGAP HBT Technology
- Single mode control input
- Internal Voltage Regulator eliminates need for external Reference Voltage (V_{REF})
- Low Leakage Current in Shutdown Mode: <1 μA
- Optimized for a 50 Ω System
- Low Profile RoHS Compliant Package, 250 °C MSL-3

UMTS/WCDMA

- 42% @ P_{OUT} = +28.5 dBm
- 26% @ P_{OUT} = +17 dBm (without DC/DC Converter)
- Low Quiescent Current: 8 mA (in low power mode)
- HSDPA Compliant (no backoff required)

TD-SCDMA MODE

- 38% @ P_{OUT} = +27.5 dBm
- 22% @ P_{OUT} = +16 dBm (without DC/DC Converter)

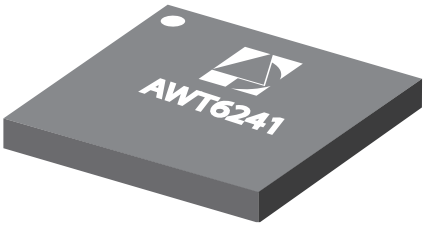

M27 Package
10 Pin 3 mm x 3 mm x 1 mm
Surface Mount Module

APPLICATIONS

- Wireless Handsets and Data Devices for
  - UMTS/WCDMA IMT 2.1 GHz band
  - TD-SCDMA 1.8/2.0 GHz bands

PRODUCT DESCRIPTION

The AWT6241 HELP3™ PA is a next generation product for UMTS handsets. This PA incorporates ANADIGICS' HELP3™ technology to provide low power consumption without the need for an external voltage regulator or DC/DC Converter. The AWT6241 is manufactured on an advanced InGaP HBT MMIC technology offering state-of-the-art reliability, temperature stability, and ruggedness. There are two operating modes for optimum efficiency at high and medium/low power output levels with a single mode input. A shutdown mode with low leakage current increases handset talk and standby-time. The self-contained 3 mm x 3 mm x 1 mm surface mount package incorporates matching networks optimized for output power, efficiency, and linearity in a 50 Ω system.

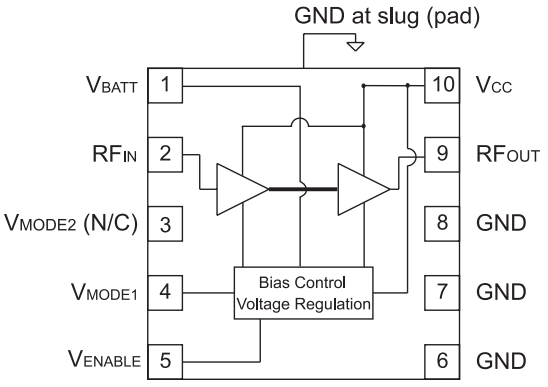

Figure 1: Block Diagram

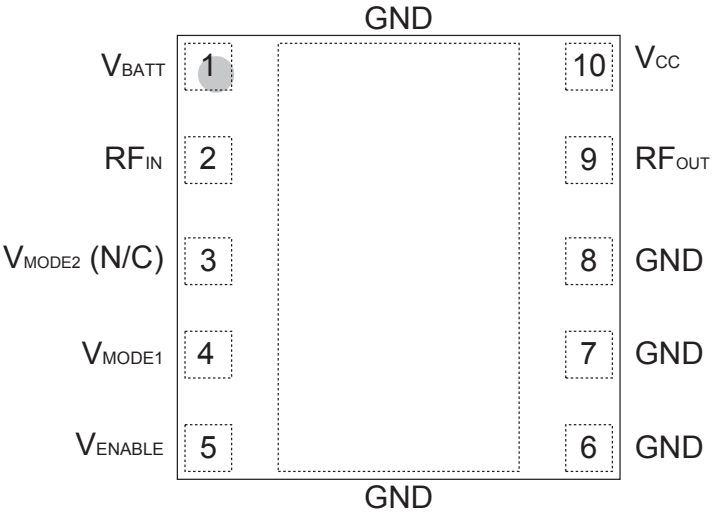

Figure 2: Pinout (X-ray Top View)

Table 1: Pin Description

PIN	NAME	DESCRIPTION
1	V_{BATT}	Battery Voltage
2	RF_{IN}	RF Input
3	V_{MODE2} (N/C)	No Connection
4	V_{MODE1}	Mode Control Voltage 1
5	V_{ENABLE}	PA Enable Voltage
6	GND	Ground
7	GND	Ground
8	GND	Ground
9	RF_{OUT}	RF Output
10	V_{CC}	Supply Voltage

ELECTRICAL CHARACTERISTICS

Table 2: Absolute Minimum and Maximum Ratings

PARAMETER	MIN	MAX	UNIT
Supply Voltage (V_{CC})	0	+5	V
Battery Voltage (V_{BATT})	0	+6	V
Control Voltages (V_{MODE1}, V_{ENABLE})	0	+3.5	V
RF Input Power (P_{IN})	-	+10	dBm
Storage Temperature (T_{STG})	-40	+150	°C

Stresses in excess of the absolute ratings may cause permanent damage. Functional operation is not implied under these conditions. Exposure to absolute ratings for extended periods of time may adversely affect reliability.

Table 3: Operating Ranges

PARAMETER	MIN	TYP	MAX	UNIT	COMMENTS
Operating Frequency (f)	1920 1880 2010	- - -	1980 1920 2025	MHz	UMTS Band 1 TD-SCDMA Band TD-SCDMA Band
Supply Voltage (V_{CC})	+3.2	+3.4	+4.2	V	$P_{OUT} \leq$ +28.5 dBm
Enable Voltage (V_{ENABLE})	+2.15 0	+2.4 -	+3.1 +0.5	V	PA "on" PA "shut down"
Mode Control Voltage (V_{MODE1})	+2.15 0	+2.4 -	+3.1 +0.5	V	Low Bias Mode High Bias Mode
RF Output Power (P_{OUT}), UMTS R99 WCDMA, HPM HSPA (MPR=0), HPM R99 WCDMA, LPM HSPA (MPR=0), LPM	 28(1) 27(1) 16.5(1) 15.5(1)	 28.5 27.5 17 16	 28.5 27.5 17 16	dBm	3GPP TS 34.121-1, Rel 7 Table C.11.1.3
RF Output Power (P_{OUT}), TD-SCDMA TD-SCDMA (HPM) TD-SCDMA (LPM)	 27 15.5	 27.5 16.0	 27.5 16.0	dBm	3GPP TS 25.102 Section 6.2.1
Case Temperature (T_C)	-20	-	+90	°C	

The device may be operated safely over these conditions; however, parametric performance is guaranteed only over the conditions defined in the electrical specifications.

Notes:
(1) For operation at V_{CC} = +3.2 V, P_{OUT} is derated by 0.5 dB.

Table 4: Electrical Specifications - UMTS/WCDMA Mode
(T_C = +25 °C, V_{CC} = +3.4 V, V_{BATT} = +3.4 V, V_{ENABLE} = +2.4 V, 50 Ω system)

PARAMETER	MIN	TYP	MAX	UNIT	COMMENTS	
					P_{OUT}	V_{MODE1}
Gain	25.0 12.0	27.5 14.0	30.0 16.5	dB	+28.5 dBm +17 dBm	0 V 2.4 V
ACLR1 at 5 MHz offset (1)	- -	-41 -42	-38 -37.5	dBc	+28.5 dBm +17 dBm	0 V 2.4 V
ACLR2 at 10 MHz offset	- -	-55 -55	-48 -48	dBc	+28.5 dBm +17 dBm	0 V 2.4 V
Power-Added Efficiency (1) (without DC/DC Converter)	39 23	42 26	- -	%	+28.5 dBm +17 dBm	0 V 2.4 V
Quiescent Current (Icq) Low Bias Mode	-	8	13	mA	V_{MODE1} = +2.4 V	
Mode Control Current	-	0.3	0.8	mA	through V_{MODE} pin, V_{MODE1} = +2.4 V	
Enable Current	-	0.3	0.8	mA	through V_{ENABLE} pin, V_{EN} = +2.4 V	
BATT Current	-	3.0	5	mA	through V_{BATT} pin, V_{MODE1} = +2.4 V	
Leakage Current	-	<1	5	µA	V_{BATT} = +4.3 V, V_{CC} = +4.3 V, V_{ENABLE} = 0 V, V_{MODE1} = 0 V	
Noise in Receive Band (2)	-	-137	-135	dBm/Hz	$P_{OUT} \leq$ +28.5 dBm, V_{MODE} = 0 V	
	-	-143	-138	dBm/Hz	$P_{OUT} \leq$ 17 dBm, V_{MODE} = +2.4 V	
Harmonics 2fo 3fo, 4fo	- -	-42 -52	-35 -35	dBc	$P_{OUT} \leq$ +28.5 dBm	
Input Impedance	-	-	2:1	VSWR		
Spurious Output Level (all spurious outputs)	-	-	-70	dBc	$P_{OUT} \leq$ +28.5 dBm In-band load VSWR < 5:1 Out-of-band load VSWR < 10:1 Applies over all operating conditions	
Load mismatch stress with no permanent degradation or failure	8:1	-	-	VSWR	Applies over full operating range	

Notes:
(1) ACLR and Efficiency measured at 1950 MHz.
(2) Noise measured at 2110 to 2170 MHz.
3. POUT ≤ +28.5 dBm; In-band load VSWR < 5:1; Out-of-band load VSWR < 10:1; Applies over all operating conditions.

Table 5: Electrical Specifications - TD-SCDMA Mode
(T_C = +25 °C, V_{CC} = +3.4 V, V_{BATT} = +3.4 V, V_{ENABLE} = +2.4 V, 50 Ω system)

PARAMETER	MIN	TYP	MAX	UNIT	COMMENTS	
					P_{OUT}	V_{MODE1}
Gain	24.0 11.5	27 13.5	30.0 16.5	dB	+27.5 dBm +16 dBm	0 V 2.4 V
ACLR1 at 1.6 MHz offset	- -	-42 -42	-38 -38	dBc	+27.5 dBm +16 dBm	0 V 2.4 V
ACLR2 at 3.2 MHz offset	- -	-55 -55	-48 -48	dBc	+27.5 dBm +16 dBm	0 V 2.4 V
Power-Added Efficiency (without DC/DC Converter)	35 18	38 22	- -	%	+27.5 dBm +16 dBm	0 V 2.4 V
Quiescent Current (Icq) Low Bias Mode	-	8	13	mA	V_{MODE1} = +2.4 V	
Mode Control Current	-	0.3	0.8	mA	through V_{MODE} pin, V_{MODE1} = +2.4 V	
Enable Current	-	0.3	0.8	mA	through V_{ENABLE} pin, V_{EN} = +2.4 V	
BATT Current	-	3.0	5	mA	through V_{BATT} pin, V_{MODE1} = +2.4 V	
Leakage Current	-	<1	5	µA	V_{BATT} = +4.3 V, V_{CC} = +4.3 V, V_{ENABLE} = 0 V, V_{MODE1} = 0 V	
Noise Figure	-	TBD	-	dB	$P_{OUT} \leq$ +27.5 dBm, V_{MODE} = 0 V	
	-	TBD	-	dB	$P_{OUT} \leq$ 16 dBm, V_{MODE} = +2.4 V	
Harmonics 2fo 3fo, 4fo	- -	- -	-35 -35	dBc	$P_{OUT} \leq$ +27.5 dBm	
Input Impedance	-	-	2:1	VSWR		
Load mismatch stress with no permanent degradation or failure	8:1	-	-	VSWR	Applies over full operating range	

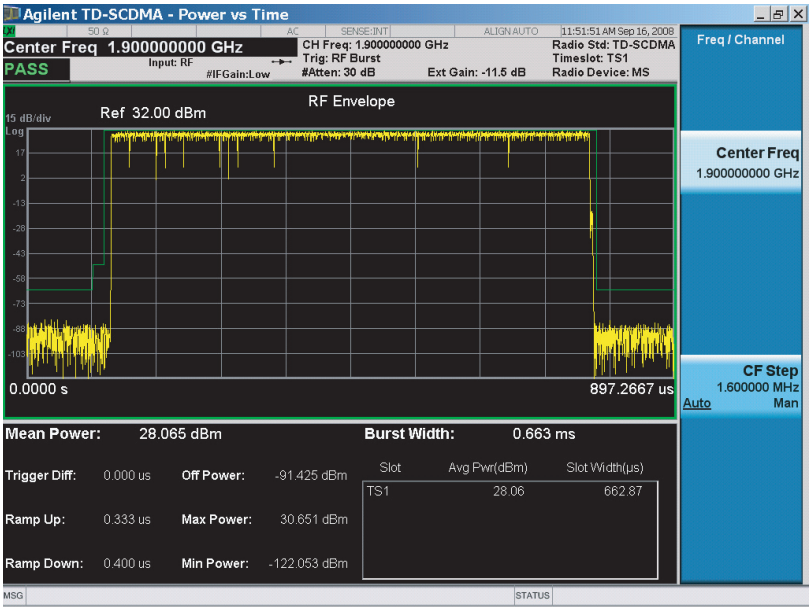

Notes:
- *Transmit off Power: -91 dBm*
- *Dynamic Range: 122 dB*

Fig 3: Transmit off power @ 1.9GHz
(Freq = 1900 MHz, POUT = 28 dBm, Vcc = 3.4 V, Tc = 25 °C)

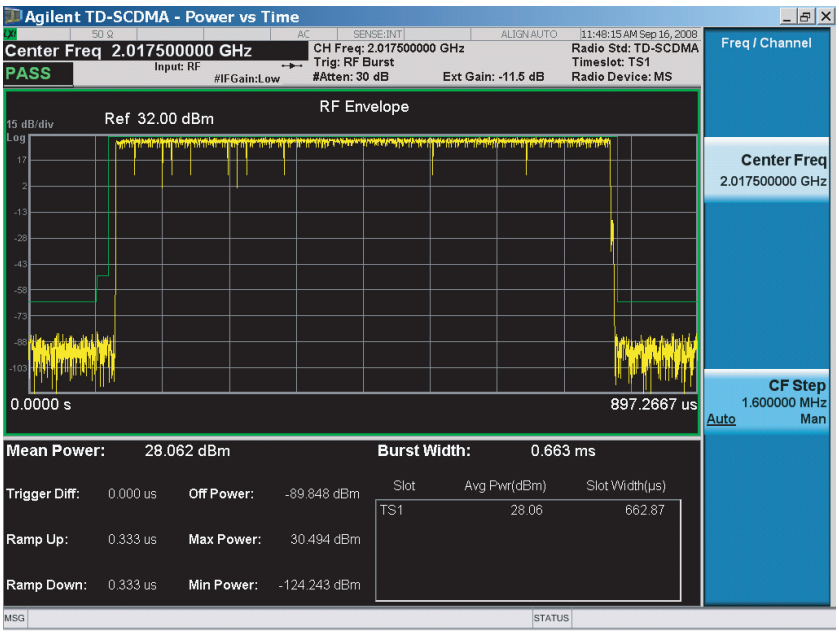

Notes:
- *Transmit off Power: -89 dBm*
- *Dynamic Range: 124 dB*

Fig 4: Transmit off power @ 2.01GHz
(Freq = 2017.5 MHz, POUT = 28 dBm, Vcc = 3.4 V, Tc = 25 °C)

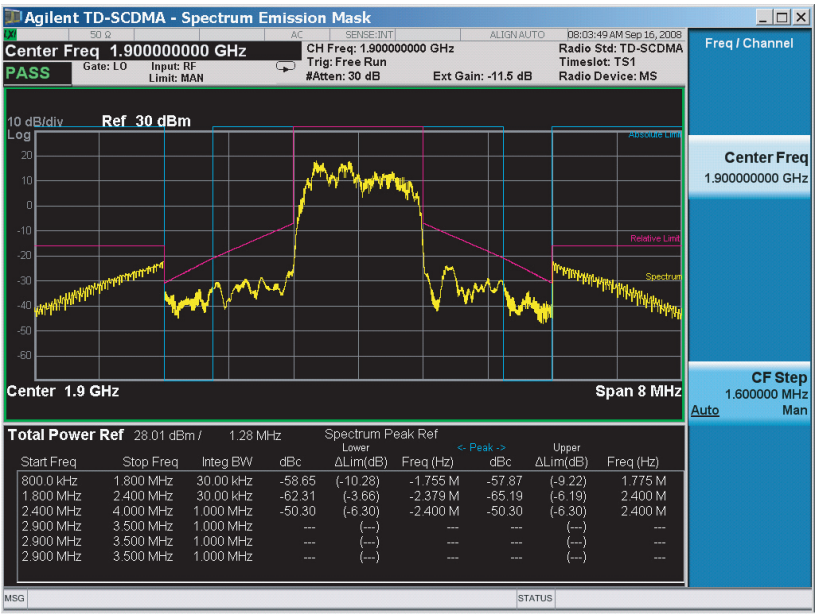

Fig 5: Spectrum Emission Mask @ 2.01GHz
(Freq = 1900 MHz, POUT = 28 dBm, Vcc = 3.4 V, Tc = 25 °C)

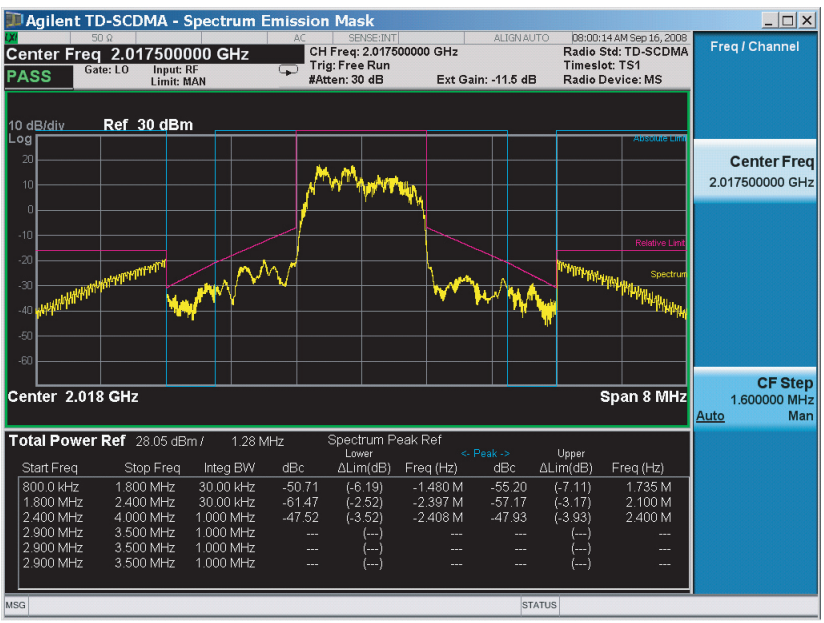

Fig 6: Spectrum Emission Mask @ 1.9GHz
(Freq = 2017.5 MHz, POUT = 28 dBm, Vcc = 3.4 V, Tc = 25 °C)

APPLICATION INFORMATION

To ensure proper performance, refer to all related Application Notes on the ANADIGICS web site: http://www.anadigics.com

Shutdown Mode

The power amplifier may be placed in a shutdown mode by applying logic low levels (see Operating Ranges table) to the V_{ENABLE} and V_{MODE1} voltages.

Bias Modes

The power amplifier may be placed in either a Low Bias mode or a High Bias mode by applying the appropriate logic level (see Operating Ranges table) to V_{MODE1}. The Bias Control table lists the recommended modes of operation for various applications. V_{MODE2} is not necessary for this PA.

Two operating modes are available to optimize current consumption. High Bias/High Power operating mode is for P_{OUT} levels $\geq$ 16 dBm. At around 16 dBm output power, the PA should be "Mode Switched" to Medium/Low power mode for lowest quiescent current consumption.

Table 6: Bias Control (UMTS)

APPLICATION	P_{OUT} LEVELS	BIAS MODE	V_{ENABLE}	V_{MODE1}	V_{CC}	V_{BATT}
UMTS - med/low power (Low Bias Mode)	$\leq$ +17 dBm	Low	+2.4 V	+2.4 V	3.2 - 4.2 V	$\geq$ 3.2 V
UMTS - high power (High Bias Mode)	> +16 dBm	High	+2.4 V	0 V	3.2 - 4.2 V	$\geq$ 3.2 V
Optional lower V_{CC} in low power mode	$\leq$ +7 dBm	Low	+2.4 V	+2.4 V	1.5 V	$\geq$ 3.2 V
Shutdown	-	Shutdown	0 V	0 V	3.2 - 4.2 V	$\geq$ 3.2 V

Table 7: Bias Control (TD-SCDMA)

APPLICATION	P_{OUT} LEVELS	BIAS MODE	V_{ENABLE}	V_{MODE1}	V_{CC}	V_{BATT}
TD-SCDMA - med/low power (Low Bias Mode)	$\leq$ +16 dBm	Low	+2.4 V	+2.4 V	3.2 - 4.2 V	$\geq$ 3.2 V
TD-SCDMA - high power (High Bias Mode)	> +15 dBm	High	+2.4 V	0 V	3.2 - 4.2 V	$\geq$ 3.2 V
Shutdown	-	Shutdown	0 V	0 V	3.2 - 4.2 V	$\geq$ 3.2 V

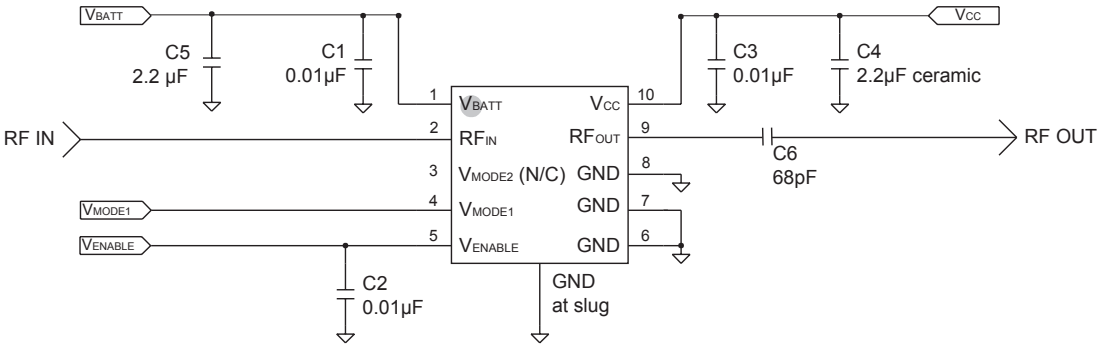

Figure 7: Application Circuit Schematic

PACKAGE OUTLINE

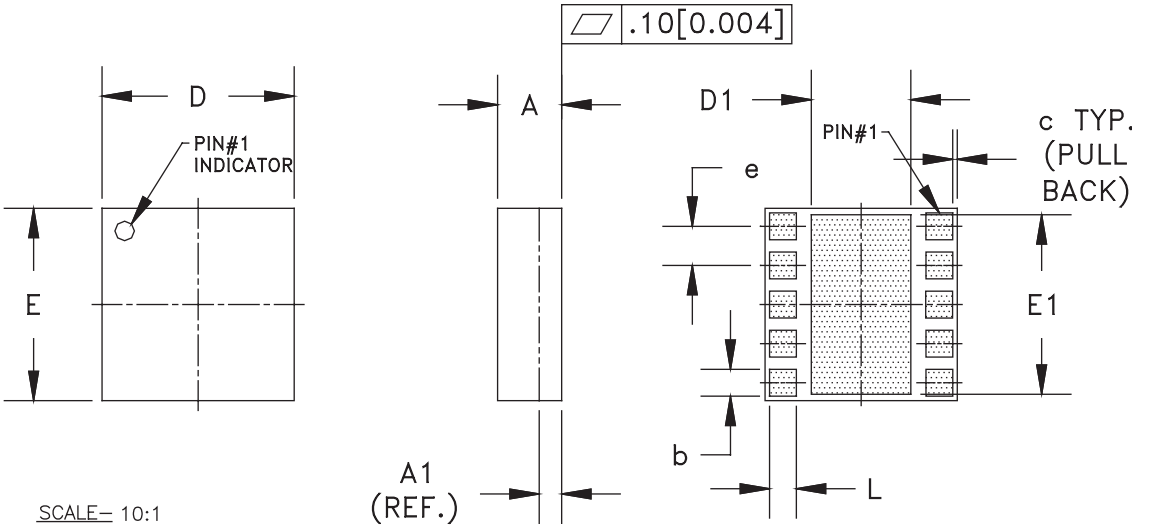

SYMBOL	MILLIMETERS			INCHES			NOTE
	MIN.	NOM.	MAX.	MIN.	NOM.	MAX.	
A	0.91	1.01	1.11	0.035	0.039	0.043	–
A1	0.35 (REF.)			0.014 (REF.)			–
b	0.33	–	0.52	0.013	–	0.020	3
c	–	0.10	–	–	0.004	–	–
D	2.88	3.00	3.12	0.113	0.118	0.123	–
D1	1.57	–	1.82	0.062	–	0.072	3
E	2.88	3.00	3.12	0.113	0.118	0.123	–
E1	2.75	–	2.85	0.108	–	0.112	3
e	0.61			0.024			3
L	0.33	–	0.52	0.013	–	0.020	3

NOTES:

1. CONTROLLING DIMENSIONS: MILLIMETERS
2. UNLESS SPECIFIED TOLERANCE=±0.076[0.003].
3. PADS (INCLUDING CENTER) SHOWN UNIFORM SIZE FOR REFERENCE ONLY. ACTUAL PAD SIZE AND LOCATION WILL VARY WITHIN MIN. AND MAX. DIMENSIONS ACCORDING TO SPECIFIC LAMINATE DESIGN.
4. UNLESS SPECIFIED DIMENSIONS ARE SYMMETRICAL ABOUT CENTER LINES SHOWN.

Figure 8: M27 Package Outline - 10 Pin 3 mm x 3 mm x 1 mm Surface Mount Module

TOP BRAND



NOTES:

1. ANADIGICS LOGO SIZE: NONE
2. PART NUMBER: 6241R
3. WAFER LOT NUMBER: LLLL = FOUR DIGIT LOT NUMBER
   NN = TWO DIGIT WAFER NUMBER
4. PIN 1 INDICATOR: LASER DOT
5. B.O.M. # 092
6. COUNTRY CODE: CC = TH -for- THAILAND, TW -for- TAIWAN, PH -for- PHILLIPINES, CH -for- CHINA, ID -for- INDONESIA, HK -for- HONG KONG
7. TYPE : ARIAL
   SIZE : 1.5-POINT
   COLOR : LASER

Figure 9: Branding Specification - M27 Package

COMPONENT PACKAGING

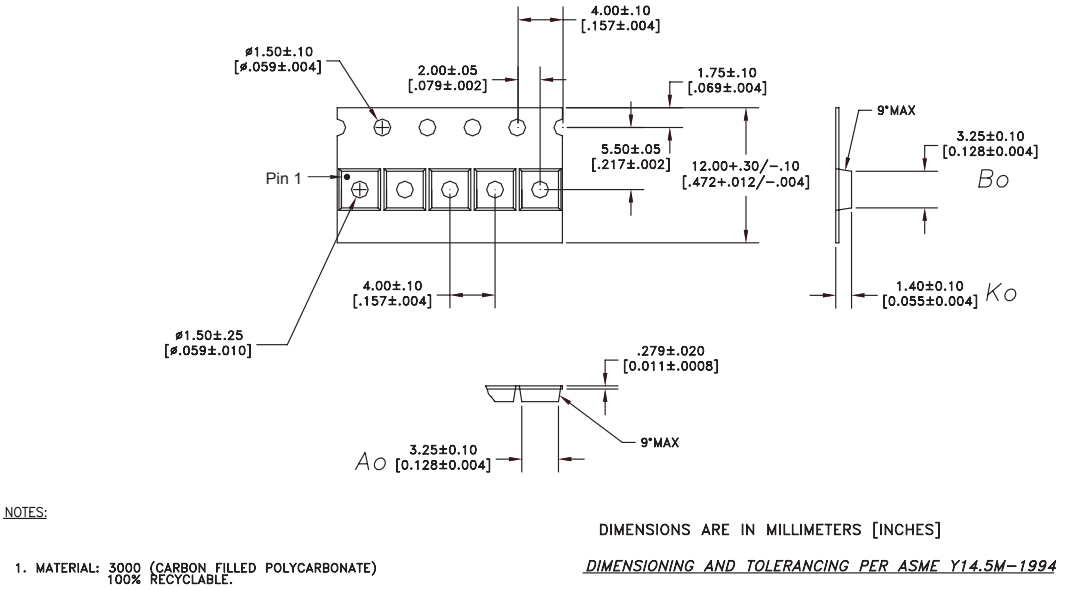

Figure 10: Tape & Reel Packaging

Table 7: Tape & Reel Dimensions

PACKAGE TYPE	TAPE WIDTH	POCKET PITCH	REEL CAPACITY	MAX REEL DIA
3 mm x 3 mm x 1 mm	12 mm	4 mm	2500	7"

ORDERING INFORMATION

ORDER NUMBER	TEMPERATURE RANGE	PACKAGE DESCRIPTION	COMPONENT PACKAGING
AWT6241RM27Q7	-20 °C to +90 °C	RoHS Compliant 10 Pin 3 mm x 3 mm x 1 mm Surface Mount Module	Tape and Reel, 2500 pieces per Reel
AWT6241RM27P9	-20 °C to +90 °C	RoHS Compliant 10 Pin 3 mm x 3 mm x 1 mm Surface Mount Module	Partial Tape and Reel

ANADIGICS, Inc.
141 Mount Bethel Road
Warren, New Jersey 07059, U.S.A.
Tel: +1 (908) 668-5000
Fax: +1 (908) 668-5132

URL: http://www.anadigics.com
E-mail: Mktg@anadigics.com

IMPORTANT NOTICE

ANADIGICS, Inc. reserves the right to make changes to its products or to discontinue any product at any time without notice. The product specifications contained in Advanced Product Information sheets and Preliminary Data Sheets are subject to change prior to a product's formal introduction. Information in Data Sheets have been carefully checked and are assumed to be reliable; however, ANADIGICS assumes no responsibilities for inaccuracies. ANADIGICS strongly urges customers to verify that the information they are using is current before placing orders.

WARNING

ANADIGICS products are not intended for use in life support appliances, devices or systems. Use of an ANADIGICS product in any such application without written consent is prohibited.