AWT6146

GSM850/GSM900/DCS/PCS
Quad Band Power Amplifier Module
With Integrated Power Control

ADVANCED PRODUCT INFORMATION - Rev 0.5

FEATURES

- InGaP HBT Technology
- Integrated Power Control (CMOS)
- Quad Band Applications
- +35 dBm GSM Output Power at 3.5 V
- +33 dBm DCS/PCS Output Power at 3.5 V
- 55% GSM850/900 PAE
- 50% DCS/PCS PAE
- Small Footprint 7mm x 7mm
- Low Profile 1.3mm
- Power Control Range >50 dB
- GPRS Capable (class 12)

APPLICATIONS

- GSM850/GSM900/DCS/PCS Handsets
- Dual/Tri/Quad Band PDA

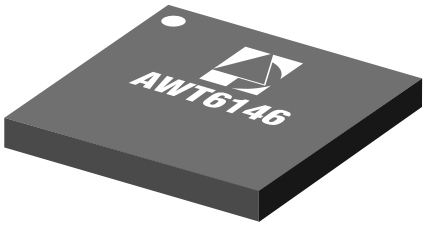

18 Pin
7mm x 7mm
Amplifier Module

PRODUCT DESCRIPTION

This quad band power amplifier module is designed to support dual, tri and quad band applications. The module includes an integrated power control scheme that facilitates fast and easy production calibration and reduces the number of external components required to complete a power control function.

The amplifier's power control range is typically 55 dB, with the output power set by applying an analog voltage to V_{RAMP}. The logical control inputs, TX_EN and BS, are both 1.8 V and 3 V logic compliant. The TX_EN is used to enable the amplifier typically with the TX burst. The BS is used to select which amplifier is enabled.

There are two amplifier chains, one to support GSM850/900 bands, the other for DCS/PCS bands. All of the RF ports for this device are internally matched to 50 Ω. Internal DC blocks are provided at the RF ports.

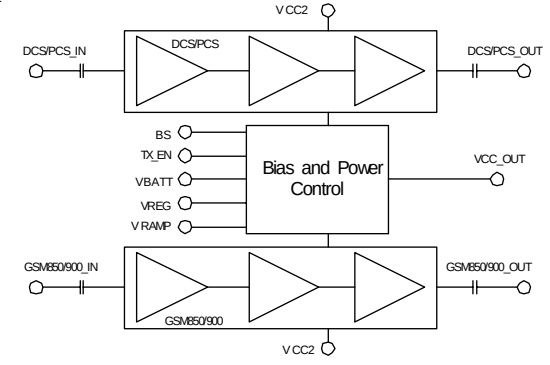

Figure 1: Block Diagram

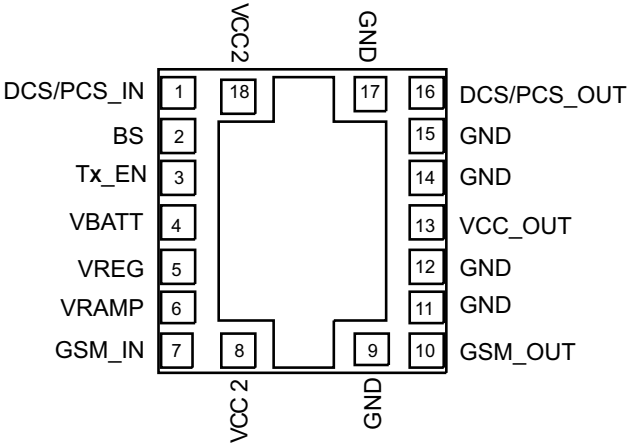

Figure 2: Pinout (X- ray Top View)

Table 1: Pin Description

PIN	NAME	DESCRIPTION	PIN	NAME	DESCRIPTION
1	DCS/PCS_IN	DCS/PCS RF Input	10	GSM_OUT	GSM850/900 RF Output
2	BS	Band Select Logic Input	11	GND	Ground
3	TX_EN	TX Enable Logic Input	12	GND	Ground
4	VBATT	Battery Supply Connection	13	VCC_OUT	Control Voltage Output which must be connected to VCC2, no decoupling
5	VREG	Regulated Supply Connection	14	GND	Ground
6	VRAMP	Analog Signal used to control the output power	15	GND	Ground
7	GSM_IN	GSM850/900 RF Input	16	DCS/PCS_OUT	DCS/PCS RF Output
8	VCC2	VCC Control Input for GSM850/900 Pre-amplifier	17	GND	Ground
9	GND	Ground	18	VCC2	VCC Control Input for DCS/PCS Pre-amplifier

ELECTRICAL CHARACTERISTICS

Table 2: Absolute Minimum and Maximum Ratings

PARAMETER	MIN	MAX	UNIT
Supply Voltage (V_{BATT})	-	+7	V
RF Input Power (RF_{IN})	-	11	dBm
Control Voltages (V_{RAMP})	-0.3	1.8	V
Storage Temperature (T_{STG})	- 55	150	°C

Stresses in excess of the absolute ratings may cause permanent damage. Functional operation is not implied under these conditions. Exposure to absolute ratings for extended periods of time may adversely affect reliability.

Table 3: ESD Ratings

PARAMETER	METHOD	RATINGS	UNIT
ESD Threshold Voltage (RF ports)	HBM	>250	V
ESD Threshold Voltage (control inputs)	HBM	>2.5	kV

Although protection circuitry has been designed into this device, proper precautions should be taken to avoid exposure to electrostatic discharge (ESD) during handling and mounting. Human body model HBM employed is resistance = 1500 Ω, capacitance = 100 pF.

Table 4: Operating Ranges

PARAMETER	MIN	TYP	MAX	UNIT	COMMENTS
Case Temperature (T_C)	-20	-	85	°C	
Supply Voltage (V_{BATT})	3.0	3.5	4.8	V	
Regulated Voltage (V_{REG})	2.7	2.8	2.9	V	
Regulated Current (I_{REG})	-	6	-	mA	TX_EN = HIGH
Regulated Current (I_{REG})	-	10	30	µA	TX_EN = LOW
Control Voltage for Maximum Power (V_{RAMP_MAX})	-	-	1.6	V	
Control Voltage for Minimum Power (V_{RAMP_MIN})	-	0.2	0.25	V	
Power Supply Leakage Current	-	1	10	µA	V_{BATT} = 4.8 V, V_{REG} = 0 V, V_{RAMP} = 0 V, TX_EN = LOW, No RF applied
V_{RAMP} Input Capacitance	-	3	-	pF	
V_{RAMP} Input Current	-	-	10	µA	
Turn ON/OFF Time	-	1	2	µs	V_{RAMP} = 0.2 V to V_{RAMP_MAX}
Duty Cycle	-	-	50	%	

The device may be operated safely over these conditions; however, parametric performance is guaranteed only over the conditions defined in the electrical specifications.

Table 5: Digital Inputs

PARAMETER	MIN	TYP	MAX	UNIT
Logic High Voltage (V_{IH})	1.2	-	V_{REG}	V
Logic Low Voltage (V_{IL})	-	-	0.5	V
Logic High Current (I_{IH})	-	-	30	µA
Logic Low Current (I_{IL})	-	-	30	µA

Table 6: Electrical Characteristics for GSM850

(V_{BATT} = 3.5 V, V_{REG} = 2.8 V, P_{IN} = 3.0 dBm, Pulse Width =1154 µs, Duty 25%, Z_{IN} = Z_{OUT} = 50 Ω, T_C = 25 °C, V_{RAMP} = 1.6 V, BS = LOW, TX_EN = HIGH)

PARAMETER	MIN	TYP	MAX	UNIT	COMMENTS
Operating Frequency (F_O)	824	-	849	MHz	
Input Power	0	3.0	5	dBm	
Output Power, P_{MAX}	34.5	35	-	dBm	Freq = 824 to 849 MHz
Degraded Output Power	-	33	-	dBm	V_{BATT} = 3.0 V, T_C = 85 °C, V_{REG} = 2.7 V, P_{IN} = 0 dBm
PAE @ P_{MAX}	-	55	-	%	Freq = 824 to 849 MHz
Forward Isolation 1	-	-35	-	dBm	TX_EN = LOW, P_{IN} = 5 dBm
Forward Isolation 2	-	-25	-	dBm	TX_EN = HIGH, V_{RAMP} = 0.2 V, P_{IN} = 5 dBm
Cross Isolation ($2F_O$ @ DCS/PCS port)	-	-30	-	dBm	V_{RAMP} = 0.2 V to V_{RAMP_MAX}
Harmonics 2fo 3fo	 - -	 -15 -30	 - -	dBm	Over all output power levels
Stability	VSWR = 8:1 All Phases, $P_{OUT} \leq$ 34.5 dBm				
	-	-	-36	dBm	F_{OUT} < 1 GHz
	-	-	-30	dBm	F_{OUT} > 1 GHz
Ruggedness	-	-	10:1		All load phases, $P_{OUT} \leq$ 34.5 dBm
RX Noise Power	-	-86	-	dBm	F_{TX} = 849 MHz, RBW = 100 kHz, F_{RX} = 869 to 894 MHz, $P_{OUT} \leq$ 34.5 dBm
Input VSWR	-	-	2.5:1		Over all output power levels

Table 7: Electrical Characteristics for GSM900

(V_{BATT} = 3.5 V, V_{REG} = 2.8 V, P_{IN} = 3.0 dBm, Pulse Width =1154 µs, Duty 25%, Z_{IN} = Z_{OUT} = 50 Ω, T_C = 25 °C, V_{RAMP} = 1.6 V, BS = LOW, TX_EN = HIGH)

PARAMETER	MIN	TYP	MAX	UNIT	COMMENTS
Operating Frequency (F_O)	880	-	915	MHz	
Input Power	0	3.0	5	dBm	
Output Power, P_{MAX}	34.5	35	-	dBm	Freq = 880 to 915 MHz
Degraded Output Power	-	33	-	dBm	V_{BATT} = 3.0 V, T_C = 85 °C, V_{REG} = 2.7 V, P_{IN} = 0 dBm
PAE @ P_{MAX}	-	55	-	%	Freq = 880 to 915 MHz
Forward Isolation 1	-	-35	-	dBm	TX_EN = LOW, P_{IN} = 5 dBm
Forward Isolation 2	-	-25	-	dBm	TX_EN = HIGH, V_{RAMP} = 0.2 V, P_{IN} = 5 dBm
Cross Isolation ($2F_O$ @ DCS/PCS port)	-	-30	-	dBm	V_{RAMP} = 0.2 V to V_{RAMP_MAX}
Harmonics 2fo 3fo	- -	-17 -30	- -	dBm	Over all output power levels
Stability	VSWR = 8:1 All Phases, $P_{OUT} \leq$ 34.5 dBm				
	-	-	-36	dBm	F_{OUT} < 1 GHz
	-	-	-30	dBm	F_{OUT} > 1 GHz
Ruggedness	-	-	10:1		All load phases, $P_{OUT} \leq$ 34.5 dBm
RX Noise Power	-	-81	-	dBm	F_{TX} = 915 MHz, RBW = 100 kHz, F_{RX} = 925 to 935 MHz, $P_{OUT} \leq$ 34.5 dBm
	-	-86	-	dBm	F_{TX} = 915 MHz, RBW = 100 kHz, F_{RX} = 935 to 960 MHz, $P_{OUT} \leq$ 34.5 dBm
Input VSWR	-	-	2.5:1		Over all output power levels

Table 8: Electrical Characteristics for DCS

(V_{BATT} = 3.5 V, V_{REG} = 2.8 V, P_{IN} = 3.0 dBm, Pulse Width =1154 μs, Duty 25%, Z_{IN} = Z_{OUT} = 50 Ω, T_C = 25 °C, V_{RAMP} = 1.6 V, BS = HIGH, TX_EN = HIGH)

PARAMETER	MIN	TYP	MAX	UNIT	COMMENTS
Operating Frequency	1710	-	1785	MHz	
Input Power	0	3.0	5	dBm	
Output Power, P_{MAX}	32	33	-	dBm	
Degraded Output Power	-	31	-	dBm	V_{BATT} = 3.0 V, T_C = 85 °C, V_{REG} = 2.7 V, P_{IN} = 0 dBm
PAE @ P_{MAX}	-	50	-	%	Freq = 1710 to 1785 MHz
Forward Isolation 1	-	-37	-	dBm	TX_EN = LOW, V_{RAMP} = 0.2 V, P_{IN} = 5 dBm
Forward Isolation 2	-	-15	-	dBm	TX_EN = HIGH, V_{RAMP} = 0.2 V, P_{IN} = 5 dBm
Harmonics 2fo 3fo	 - -	 -17 -30	 - -	dBm	Over all output power levels
Stability	VSWR = 8:1 All Phases, P_{OUT} ≤ 32 dBm				
	-	-	-36	dBm	F_{OUT} < 1 GHz
	-	-	-30	dBm	F_{OUT} > 1 GHz
Ruggedness	-	-	10:1		All load phases, P_{OUT} ≤ 32 dBm
RX Noise Power	-	-86	-	dBm	F_{TX} = 1785 MHz, RBW = 100 kHz, F_{RX} = 1805 to 1880 MHz, P_{OUT} ≤ 32 dBm
Input VSWR	-	-	2.5:1		Over all output power levels

Table 9: Electrical Characteristics for PCS

(V_{BATT} = 3.5 V, V_{REG} = 2.8 V, P_{IN} = 3.0 dBm, Pulse Width =1154 μs, Duty 25%, Z_{IN} = Z_{OUT} = 50 Ω, T_C = 25 °C, V_{RAMP} = 1.6 V, BS = HIGH, TX_EN = HIGH)

PARAMETER	MIN	TYP	MAX	UNIT	COMMENTS
Operating Frequency	1850	-	1910	MHz	
Input Power	0	3.0	5	dBm	
Output Power, P_{MAX}	32	33	-	dBm	
Degraded Output Power	-	30.5	-	dBm	V_{BATT} = 3.0 V, T_C = 85 °C, V_{REG} = 2.7 V, P_{IN} = 0 dBm
PAE @ P_{MAX}	-	50	-	%	Freq = 1850 to 1910 MHz
Forward Isolation 1	-	-35	-	dBm	TX_EN = LOW, V_{RAMP} = 0.2 V, P_{IN} = 5 dBm
Forward Isolation 2	-	-15	-	dBm	TX_EN = HIGH, V_{RAMP} = 0.2 V, P_{IN} = 5 dBm
Harmonics 2fo 3fo	 - -	 -20 -30	 - -	dBm	Over all output power levels
Stability	VSWR = 8:1 All Phases, P_{OUT} ≤ 32 dBm				
	-	-	-36	dBm	F_{OUT} < 1 GHz
	-	-	-30	dBm	F_{OUT} > 1 GHz
Ruggedness	-	-	10:1		All load phases, P_{OUT} ≤ 32 dBm
RX Noise Power	-	-86	-	dBm	F_{TX} = 1910 MHz, RBW = 100 kHz, F_{RX} = 1930 to 1990 MHz, P_{OUT} ≤ 32 dBm
Input VSWR	-	-	2.5:1		Over all output power levels

PACKAGE OUTLINE

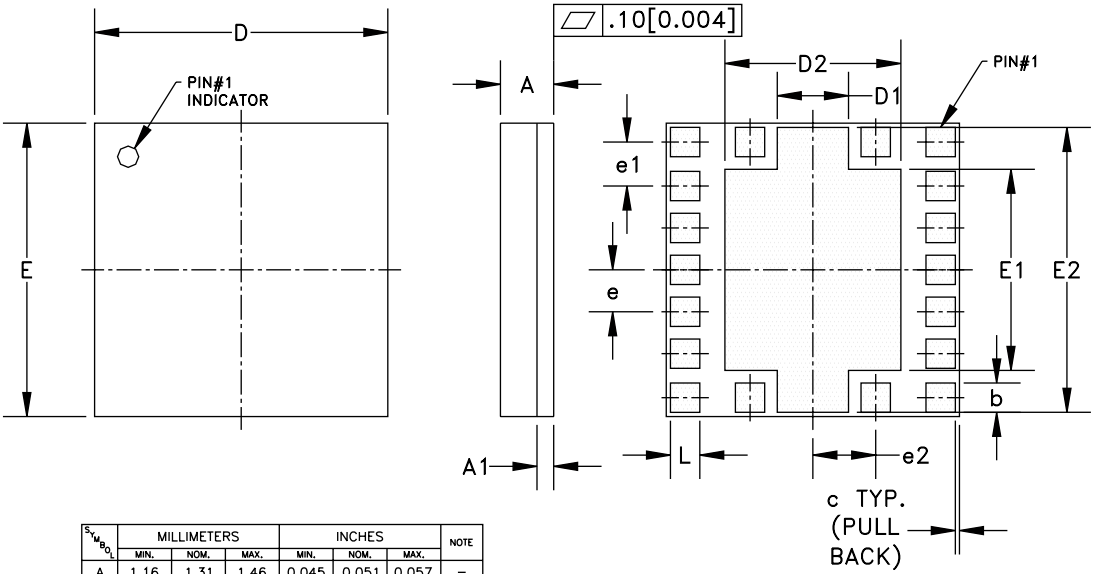

SYMBOL	MILLIMETERS			INCHES			NOTE
	MIN.	NOM.	MAX.	MIN.	NOM.	MAX.	
A	1.16	1.31	1.46	0.045	0.051	0.057	–
A1	–	0.30	–	–	0.012	–	–
b	–	0.70	–	–	0.027	–	–
c	–	0.10	–	–	0.004	–	–
D	6.88	7.00	7.12	0.270	0.275	0.280	–
D1	–	1.70	–	–	0.067	–	–
D2	–	4.19	–	–	0.165	–	–
E	6.88	7.00	7.12	0.270	0.275	0.280	–
E1	–	4.80	–	–	0.189	–	–
E2	–	6.78	–	–	0.267	–	–
e	–	1.00	–	–	0.039	–	8X
e1	–	1.05	–	–	0.041	–	4X
e2	–	1.50	–	–	0.059	–	4X
L	–	0.70	–	–	0.027	–	–

NOTES:

1. CONTROLLING DIMENSIONS: MILLIMETERS
2. UNLESS SPECIFIED TOLERANCE=±0.076[0.003].

Figure 3: Package Outline

NOTES

NOTES

ANADIGICS, Inc.
141 Mount Bethel Road
Warren, New Jersey 07059, U.S.A.
Tel: +1 (908) 668-5000
Fax: +1 (908) 668-5132

URL: http://www.anadigics.com
E-mail: Mktg@anadigics.com

IMPORTANT NOTICE

ANADIGICS, Inc. reserves the right to make changes to its products or to discontinue any product at any time without notice. The product specifications contained in Advanced Product Information sheets and Preliminary Data Sheets are subject to change prior to a product's formal introduction. Information in Data Sheets have been carefully checked and are assumed to be reliable; however, ANADIGICS assumes no responsibilities for inaccuracies. ANADIGICS strongly urges customers to verify that the information they are using is current before placing orders.

WARNING

ANADIGICS products are not intended for use in life support appliances, devices or systems. Use of an ANADIGICS product in any such application without written consent is prohibited.