AWT6137

HELP™ Cellular Dual Mode AMPS/CDMA
3.4V/28dBm Linear Power Amplifier Module

PRELIMINARY DATA SHEET - Rev 1.0

FEATURES

- InGaP HBT Technology
- High Efficiency:
  - 39% @ +28 dBm
  - 20% @ +16 dBm
- Low Quiescent Current: 15 mA
- Low Leakage Current in Shutdown Mode: <1 µA
- V_{REF} = +2.85 V (+2.7 V Min Over Temp.)
- Low Profile Surface Mount Package: 1.56mm Max
- CDMA 1XRTT and 1xEV-DO Compliant



M7 Package
10 Pin 4 x 4 x 1.5 mm
Surface Mount Module

APPLICATIONS

- Single Mode CDMA Wireless Handsets
- Dual Mode AMPS/CDMA Wireless Handsets

PRODUCT DESCRIPTION

The AWT6137 CDMA/AMPS Power Amplifier is a high performance CDMA2000/ 1XRTT amplifier designed specifically for Cellular wireless applications. This rugged, easy to use InGaP HBT design delivers state of the art efficiency and temperature stability with very low DC power consumption. The AWT6137 PA module has the lowest CDG currents available to handset manufacturers today.

A combination of low idle current and mode switching enables the AWT6137 to deliver unparalleled CDMA average power efficiencies. This bias feature allows the AWT6137 to significantly increase the battery usage time of a mobile handset. The device has mode-switching to take advantage of its high efficiency operation over a wide range of output powers. Higher low power efficiency is achieved without an external DAC or DC-DC converter. The integrated power amplifier module employs a proprietary bias control and temperature compensation circuit that assures stable operation, even at extreme temperature conditions.

The self contained 4 x 4 x 1.5 mm surface mount package incorporates matching networks optimized for output power, efficiency and linearity in a 50 Ω system making it easy to incorporate the device into BOTH new and existing designs.

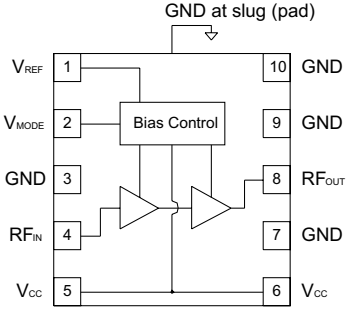

Figure 1: Block Diagram

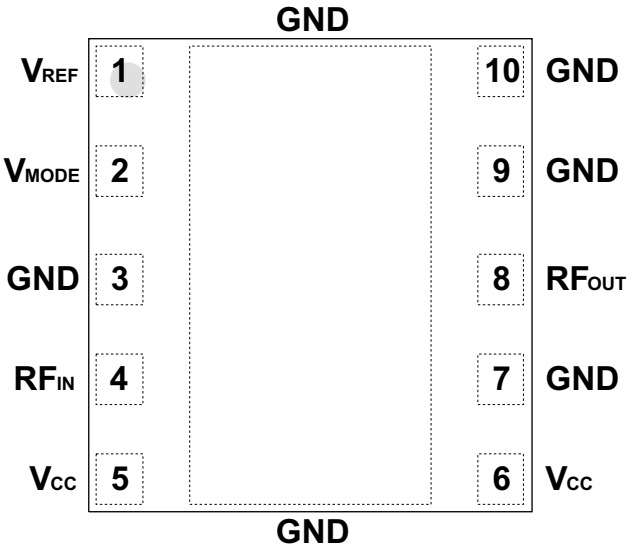

Figure 2: Pinout (X-ray Top View)

Table 1: Pin Description

PIN	NAME	DESCRIPTION
1	V_{REF}	Reference Voltage
2	V_{MODE}	Mode Control
3	GND	Ground
4	RF_{IN}	RF Input
5	V_{CC}	Supply Voltage
6	V_{CC}	Supply Voltage
7	GND	Ground
8	RF_{OUT}	RF Output
9	GND	Ground
10	GND	Ground

ELECTRICAL CHARACTERISTICS

Table 2: Absolute Minimum and Maximum Ratings

PARAMETER	MIN	MAX	UNIT
Supply Voltage (V_{CC})	0	+5	V
Mode Control Voltage (V_{MODE})	0	+3.5	V
Reference Voltage (V_{REF})	0	+3.5	V
RF Input Power (P_{IN})	-	+10	dBm
Storage Temperature (T_{STG})	-40	+150	°C

Stresses in excess of the absolute ratings may cause permanent damage. Functional operation is not implied under these conditions. Exposure to absolute ratings for extended periods of time may adversely affect reliability.

Table 3: Operating Ranges

PARAMETER	MIN	TYP	MAX	UNIT	COMMENTS
Operating Frequency (f)	824	-	849	MHz	
Supply Voltage (V_{CC})	+3.2	+3.4	+4.2	V	
Reference Voltage (V_{REF})	+2.7 0	+2.85 -	+3.1 +0.5	V	PA "on" PA "shut down"
Mode Control Voltage (V_{MODE})	+2.5 0	+2.85 -	+3.1 +0.5	V	Low Bias Mode High Bias Mode
RF Output Power (P_{OUT})	30.5 (1) 27.5 (1)	31.0 28.0	- -	dBm	AMPS CDMA
Case Temperature (T_C)	-30	-	+85	°C	

The device may be operated safely over these conditions; however, parametric performance is guaranteed only over the conditions defined in the electrical specifications.

Notes:
(1) For operation at T_C = +85 °C and V_{CC} = +3.2 V, P_{OUT} is derated by 0.5 dB.

Table 4: Electrical Specifications - AMPS Operation
(T_C = +25 °C, V_{CC} = +3.4 V, V_{REF} = +2.85 V, V_{MODE} = 0 V, P_{OUT} = +31 dBm, 50 Ω system)

PARAMETER	MIN	TYP	MAX	UNIT	COMMENTS
Gain	25.5	26.5	30	dB	
Gain Variation	-	0.5	1.5	dB	
Power-Added Efficiency	50	55	-	%	
Quiescent Current (Icq)	-	100	120	mA	
Reference Current	-	3.5	5.0	mA	through V_{REF} pin
Mode Control Current	-	0	0.1	mA	through V_{MODE} pin, V_{MODE} = 0 V
Leakage Current	-	<1	5	µA	V_{CC} = +4.2 V, V_{REF} = 0 V, V_{MODE} = 0 V
Noise in Receive Band	-	-134	-132	dBm/Hz	869 MHz to 894 MHz
Harmonics 2fo 3fo, 4fo	 - -	 -40 -45	 -30 -30	dBc	
Input Impedance	-	-	2:1	VSWR	
Spurious Output Level (all spurious outputs)	-	-	-65	dBc	P_{OUT} ≤ +31 dBm In-band load VSWR < 5:1 Out-of-band load VSWR < 10:1
Load mismatch stress with no permanent degradation or failure	8:1	-	-	VSWR	V_{CC} = +5.0 V P_{IN} = +5 dBm Applies over full operating temperature range

Table 5: Electrical Specifications - CDMA Operation
(T_C = +25 °C, V_{CC} = +3.4 V, V_{REF} = +2.85 V, 50 Ω system)

PARAMETER	MIN	TYP	MAX	UNIT	COMMENTS
Gain	25 14	27 16	30 20	dB	P_{OUT} = +28 dBm, V_{MODE} = 0 V P_{OUT} = +16 dBm, V_{MODE} = +2.85 V
Adjacent Channel Power at ± 885 kHz offset (1) Primary Channel BW = 1.23 MHz Adjacent Channel BW = 30 kHz	 - -	 -49 -54	 -47 -47	dBc	 P_{OUT} = +28 dBm, V_{MODE} = 0 V P_{OUT} = +16 dBm, V_{MODE} = +2.85 V
Adjacent Channel Power at ± 1.98 MHz offset Primary Channel BW = 1.23 MHz Adjacent Channel BW = 30 kHz	 - -	 -59 -60	 -56 -57	dBc	 P_{OUT} = +28 dBm, V_{MODE} = 0 V P_{OUT} = +16 dBm, V_{MODE} = +2.85 V
Power-Added Efficiency (1)	37 18 1	39 20 1.7	- - -	%	P_{OUT} = +28 dBm, V_{MODE} = 0 V P_{OUT} = +16 dBm, V_{MODE} = +2.85 V P_{OUT} = 0 dBm, V_{MODE} = +2.85 V
Quiescent Current (Icq)	- -	100 15	120 20	mA	V_{MODE} = 0 V V_{MODE} = +2.85 V
Reference Current	-	3.5	5.0	mA	through V_{REF} pin
Mode Control Current	-	0.6	1	mA	through V_{MODE} pin
Leakage Current	-	<1	5	µA	V_{CC} = +4.2 V, V_{REF} = 0 V, V_{MODE} = 0 V
Noise in Receive Band	-	-135	-133	dBm/Hz	869 MHz to 894 MHz
Harmonics 2fo 3fo, 4fo	 - -	 -40 -45	 -30 -30	dBc	
Input Impedance	-	-	2:1	VSWR	
Spurious Output Level (all spurious outputs)	-	-	-65	dBc	P_{OUT} ≤ +28 dBm In-band load VSWR < 5:1 Out-of-band load VSWR < 10:1
Load mismatch stress with no permanent degradation or failure	8:1	-	-	VSWR	V_{CC} = +5.0 V P_{IN} = +5 dBm Applies over full operating temperature range

Notes:
(1) PAE and ACP limit applies at 836.5 MHz.

APPLICATION INFORMATION

To ensure proper performance, refer to all related Application Notes on the ANADIGICS web site: http://www.anadigics.com

Shutdown Mode

The power amplifier may be placed in a shutdown mode by applying a logic low levels (see Operating Ranges table) to both the V_{REF} and V_{MODE} voltages.

Bias Modes

The power amplifier may be placed in either a Low Bias mode or a High Bias mode by applying the appropriate logic level (see Operating Ranges table) to the V_{MODE} voltage. The Bias Control table lists the recommended modes of operation for various applications.

Table 6: Bias Control

APPLICATION	P_{OUT} LEVELS	BIAS MODE	V_{REF}	V_{MODE}
AMPS	(all)	High	+2.85 V	0 V
CDMA - low power	≤+16 dBm	Low	+2.85 V	+2.85 V
CDMA - high power	>+16 dBm	High	+2.85 V	0 V
Shutdown	-	Shutdown	0 V	0 V

PACKAGE OUTLINE

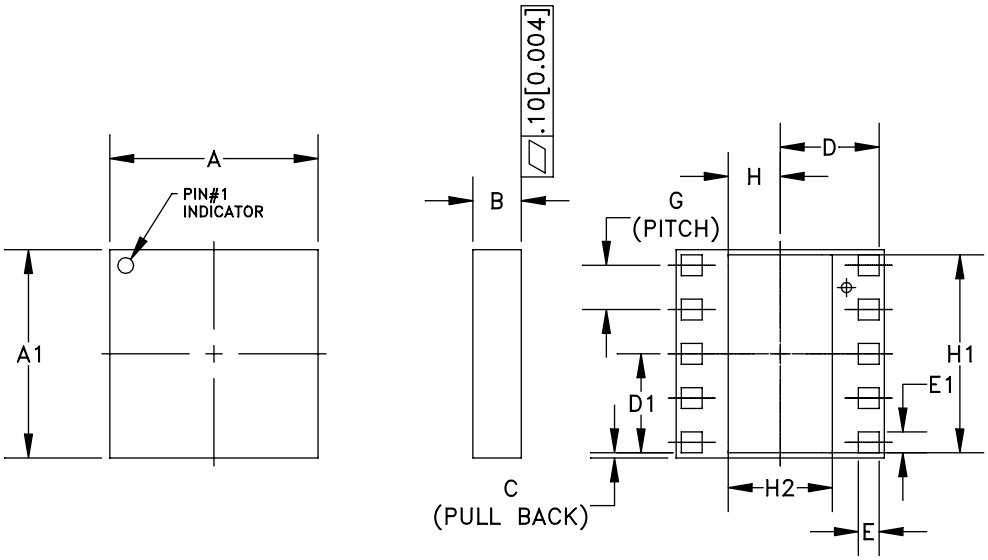

SYMBOL	MILLIMETERS			INCHES			NOTE
	MIN.	NOM.	MAX.	MIN.	NOM.	MAX.	
A	3.88	4.00	4.12	0.152	0.157	0.162	–
A1	3.88	4.00	4.12	0.152	0.157	0.162	–
B	1.26	1.41	1.56	0.049	0.055	0.061	–
C	–	0.10	–	–	0.004	–	–
D	–	1.90	–	–	0.075	–	–
D1	–	1.90	–	–	0.075	–	–
E	0.35	0.40	0.45	0.013	0.015	0.017	–
E1	0.35	0.40	0.45	0.013	0.015	0.017	–
G	0.85 BSC			0.033 BSC			–
H	–	1.00	–	–	0.039	–	–
H1	–	3.80	–	–	0.149	–	–
H2	–	2.00	–	–	0.078	–	–

NOTES:

1. CONTROLLING DIMENSIONS: MILLIMETERS
2. UNLESS SPECIFIED TOLERANCE=±0.076[0.003].

Figure 3: M7 Package Outline - 10 Pin 4 x 4 x 1.5 mm Surface Mount Module

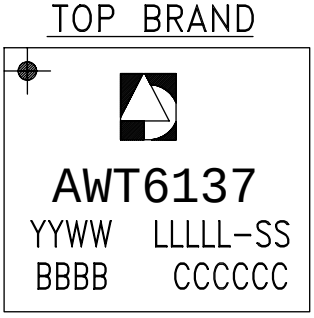

NOTES:

1. ANADIGICS LOGO SIZE:	X=0.040±0.010 Y=0.048±0.010
2. PART #	AWT6137
3. YEAR AND WORK WEEK:	YYWW: YY = YEAR, WW = WORK WEEK
4. LOT – WAFER I.D.:	LLLLL = LOT#, SS = WAFER I.D.
5. PIN 1 INDICATOR:	MOLD NOTCH –or– INK DOT
6. BOM #	BBBB
7. COUNTRY CODE:	CCCCCC
8. TYPE : ELITE SIZE : AS LARGE AS POSSIBLE Laser Marked	

Figure 4: Branding Specification

COMPONENT PACKAGING

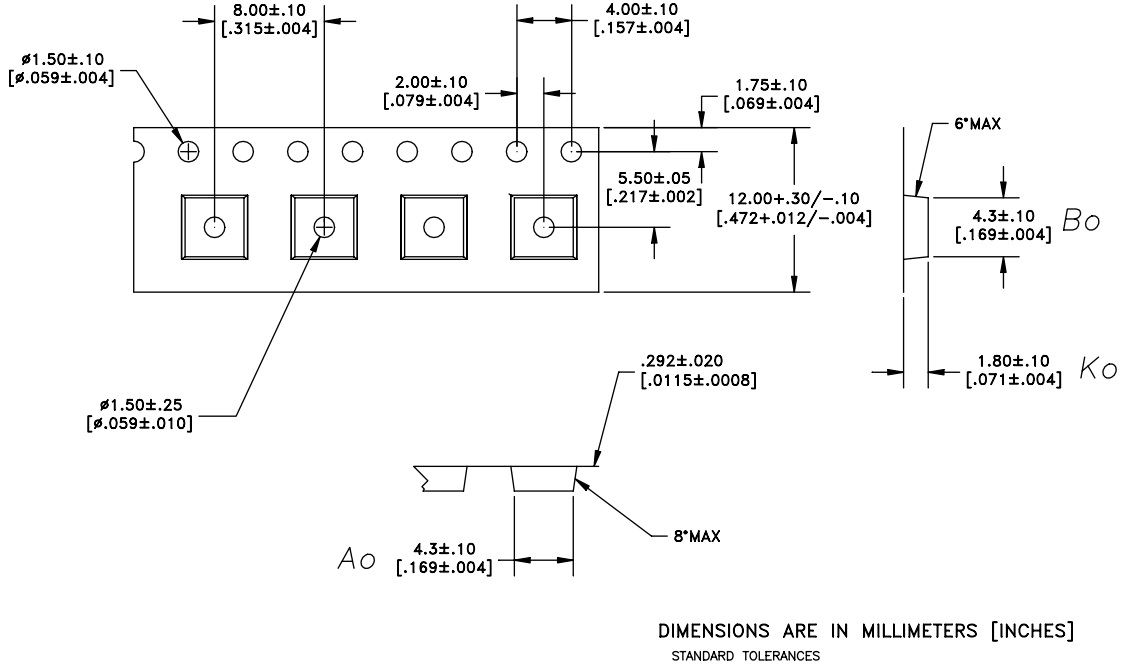

Figure 5: Tape & Reel Packaging

Table 7: Tape & Reel Dimensions

PACKAGE TYPE	TAPE WIDTH	POCKET PITCH	REEL CAPACITY	MAX REEL DIA
4 X 4 x 1.5 mm	12mm	8mm	2500	13"

NOTES

NOTES

NOTES

ORDERING INFORMATION

ORDER NUMBER	TEMPERATURE RANGE	PACKAGE DESCRIPTION	COMPONENT PACKAGING
AWT6137M7P8	-30 °C to +85 °C	10 Pin 4 x 4 x 1.5 mm Surface Mount Module	Tape and Reel, 2500 pieces per Reel

ANADIGICS, Inc.
141 Mount Bethel Road
Warren, New Jersey 07059, U.S.A.
Tel: +1 (908) 668-5000
Fax: +1 (908) 668-5132

URL: http://www.anadigics.com
E-mail: Mktg@anadigics.com

IMPORTANT NOTICE

ANADIGICS, Inc. reserves the right to make changes to its products or to discontinue any product at any time without notice. The product specifications contained in Advanced Product Information sheets and Preliminary Data Sheets are subject to change prior to a product's formal introduction. Information in Data Sheets have been carefully checked and are assumed to be reliable; however, ANADIGICS assumes no responsibilities for inaccuracies. ANADIGICS strongly urges customers to verify that the information they are using is current before placing orders.

WARNING

ANADIGICS products are not intended for use in life support appliances, devices or systems. Use of an ANADIGICS product in any such application without written consent is prohibited.