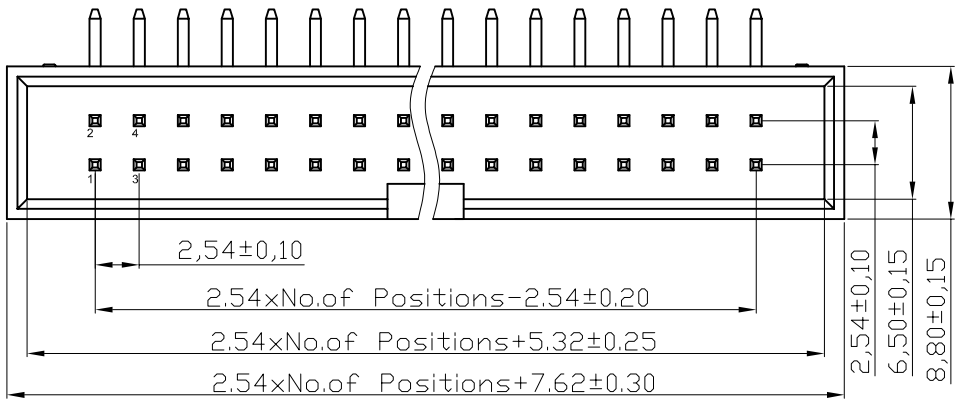

Recommended P.C.B Layout(Top Side)
(PCB BOARD TOLERANCE±0.05)

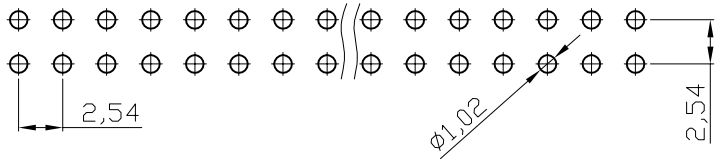

NOTES:

MATERIAL
1.Insulator Material:PBT+30%GF(UL94V-0),Grey
2.Contact Material : Brass
3.Contact Plating : Gold flash/Tin Over Ni
④ AWHW xxA-0102-T:30u" Au/Tin Over Ni
AWHW xxA-0202-T:Gold flash/Tin Over Ni

ELECTRICAL
1.Current Rating : 3AMP
2.Withstand Voltage : 500V AC/Minute
3.Contact Resistance : 20mΩ max
4.Insulation Resistance: 1000MΩ min
ENVIRONMENTAL
1.Operation Temperature: -40°C to +105°C
2.Packing : Tray packing

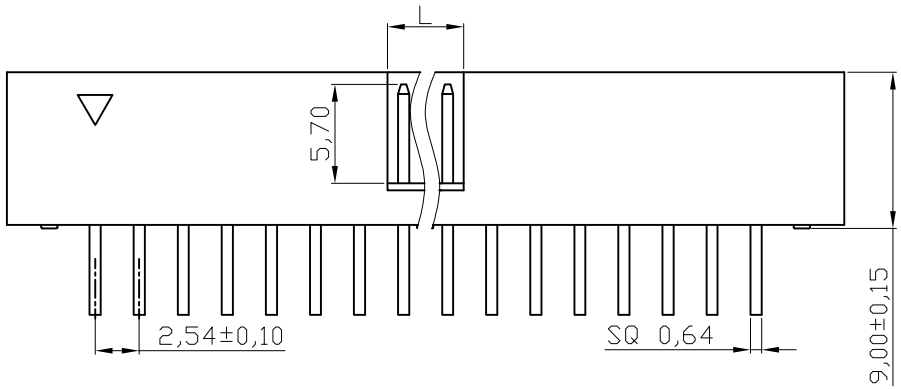

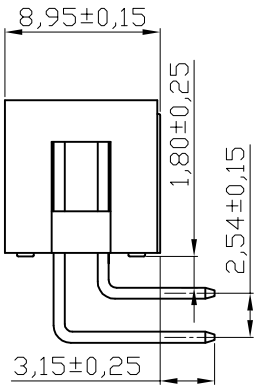

Order information:
xx : 06,08,10,12,14,16,18,20,24
26,30,34,40,50,60,64

Dimension antitheses list	
NO. Pin	L
6P-8P	4.00
10P-64P	4.40

RoHS compliant
Unit: mm

③ UL File No.: E198287

Scale	Free
TOLERANCE	
X.X	±0.40
X.XX	±0.25
X.XXX	±0.15
DIM	TOL
Angle	±3°

Id.	Modification	Date	Name
④	Add 30u" Au version	12.12.2013	Winnie
③	Add UL file no.	12.12.2013	Amy
②	Update	29.06.2009	Dean
①	Drawn	25.01.2006	Alex

	Date	Name
Drawn	25.01.2006	Alex
Approved	12.12.2013	Winnie

ASSMANN WSW components

Customer-No.

ASSMANN WSW-No.
AWHW xxA-0202-T
④ AWHW xxA-0102-T

Drawing-No.
ASS 2315 CO
rev04

Replace
Sheet

SVxxxx