AWB7122

1805 MHz to 1880 MHz
Small-Cell Power Amplifier Module
DATA SHEET

FEATURES

- InGaP HBT Technology
- -47 dBc ACPR @ + 10 MHz, +24.5 dBm
- 30 dB Gain
- High Efficiency
- Low Transistor Junction Temperature
- Internally matched for a 50 Ω System
- Low Profile Miniature Surface Mount Package; Halogen Free and RoHS Compliant
- Multi-Carrier Capability



14 Pin 7 mm x 7 mm x 1.3 mm Surface Mount Module

APPLICATIONS

- LTE, WCDMA and HSDPA Air Interfaces
- Picocell, Femtocell, Home Nodes
- Customer Premises Equipment (CPE)
- Data Cards and Terminals

PRODUCT DESCRIPTION

The AWB7122 is a highly linear, fully matched, power amplifier module designed for picocell, femtocell, and customer premises equipment (CPE) applications. Its high power efficiency and low adjacent channel power levels meet the extremely demanding needs of small cell infrastructure architectures. Designed for LTE, WCDMA, HSDPA air interfaces operating in the 1805 MHz to 1880 MHz band, the AWB7122 delivers up to +24.5 dBm of LTE (E-TM1.1) power with an ACPR of -47 dBc. It operates from a convenient +4.2 V supply and provides 30 dB of gain. The device is manufactured using an advanced InGaP HBT MMIC technology offering state-of-the-art reliability, temperature stability, and ruggedness. The self-contained 7 mm x 7 mm x 1.3 mm surface mount package incorporates RF matching networks optimized for output power, efficiency, and linearity in a 50 Ω system.

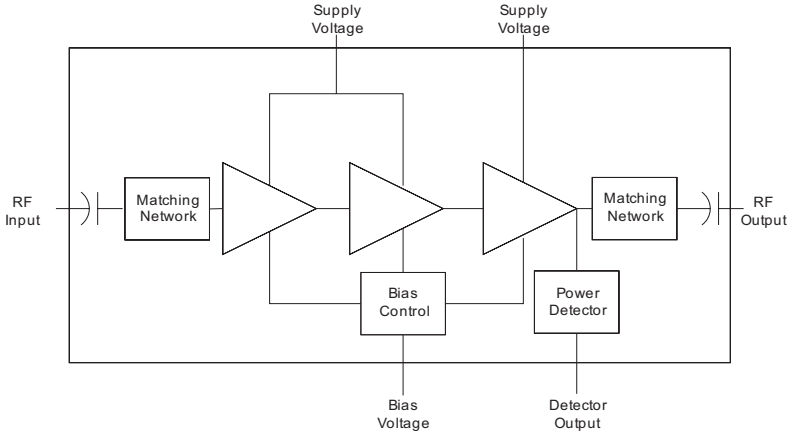

Figure 1: Block Diagram

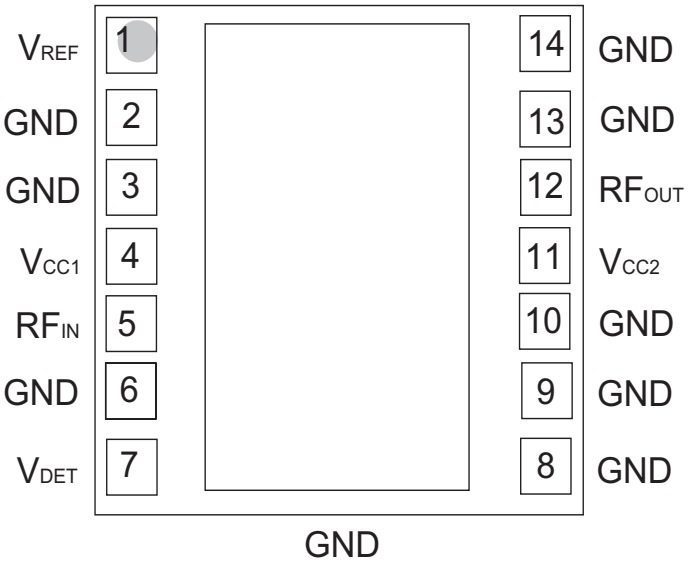

Figure 2: Pinout (X-ray Top View)

Table 1: Pin Description

PIN	NAME	DESCRIPTION
1	V_{REF}	Reference Voltage
2	GND	Ground
3	GND	Ground
4	V_{CC1}	Supply Voltage
5	RF_{IN}	RF Input
6	GND	Ground
7	V_{DET}	Detector Voltage
8	GND	Ground
9	GND	Ground
10	GND	Ground
11	V_{CC2}	Supply Voltage
12	RF_{OUT}	RF Output
13	GND	Ground
14	GND	Ground

ELECTRICAL CHARACTERISTICS

Table 2: Absolute Minimum and Maximum Ratings

PARAMETER	MIN	MAX	UNIT
Supply Voltage (V_{CC})	0	+5	V
Reference Voltage (V_{REF})	0	+3.5	V
RF Output Power (P_{OUT})	-	+28	dBm, modulated
RF Input Power (P_{IN})	-	+10	dBm, CW
ESD Rating Human Body Model (1) Charged Device Model (2)	 Class 1C Class IV	 - -	
MSL Rating (3)	4	-	
Junction Temperature (T_J)	-	+150	°C
Storage Temperature (T_{STG})	-40	+150	°C

Functional operation is not implied under these conditions. Exceeding any one or a combination of the Absolute Maximum Rating Conditions may cause permanent damage to the device. Exposure to absolute ratings for extended periods of time may adversely affect reliability.

Notes:
(1) JEDEC JS-001-2010.
(2) JEDEC JESD22-C101D.
(3) 260 °C peak reflow.

Table 3: Operating Ranges

PARAMETER	MIN	TYP	MAX	UNIT	COMMENTS
Operating Frequency (f)	1805	-	1880	MHz	
Supply Voltage (V_{CC})	+3.2	+4.2	+4.5	V	
Reference Voltage (V_{REF})	+2.80 0	+2.85 -	+2.90 +0.5	V	PA "on" PA "shut down"
RF Output Power (P_{OUT}) (1)	-	+24.5	-	dBm	
Case Temperature (T_C) (2)	-40	-	+85	°C	

The device may be operated safely over these conditions; however, parametric performance is guaranteed only over the conditions defined in the electrical specifications.

Notes:
(1) Typ RF Output Power is used during production test.
(2) Case Temperature references the board temperature at the ground paddle on the backside of the package.

Table 4: Electrical Specifications
(T_C = +25 °C, V_{CC} = +4.2 V, V_{REF} = +2.85 V, 50 Ω system)

PARAMETER	MIN	TYP	MAX	UNIT	COMMENTS
Gain [2]	30	32	36	dB	
ACPR [1], [2], [3] @ 10 MHz @ 20 MHz	 - -	 -47 -57	 -45 -55	dBc	
Power-Added Efficiency [1], [2], [3]	14.5	16	-	%	
Thermal Resistance	-	23.8	-	ºC/W	Junction to case
Supply Current [1], [2], [3]	-	390	463	mA	Total through V_{CC} pins
Quiescent Current (Icq)	-	135	175	mA	
Reference Current	-	6.5	10	mA	through V_{REF} pin
Leakage Current	-	1.5	5	µA	V_{CC} = +4.5 V, V_{REF} = 0 V
Harmonics 2fo 3fo 4fo	 - - -	 -56 -65 -65	 -48 -57 -57	dBc	
Input Return Loss	10	14	-	dB	
P1dB	-	32	-	dBm	
Spurious Output Level (all spurious outputs)	-	-	-60	dBc	P_{OUT} ≤ +24.5 dBm In-band load VSWR < 5:1 Out-of-band load VSWR < 10:1 Applies over all voltage and temperature operating ranges
Load mismatch stress with no permanent degradation or failure	8:1	-	-	VSWR	V_{CC} = +4.2 V, P_{IN} = 0 dBm Applies over full operating temperature range

Notes:
(1) ACPR and Efficiency measured at 1842.5 MHz.
(2) P_{OUT} = +24.5 dBm.
(3) LTE E-TM1.1 (10 MHz)

APPLICATION INFORMATION

To ensure proper performance, refer to all related Application Notes.

Shutdown Mode

The power amplifier may be placed in a shutdown mode by applying logic low levels (see Operating Ranges table) to the V_{REF} voltage.

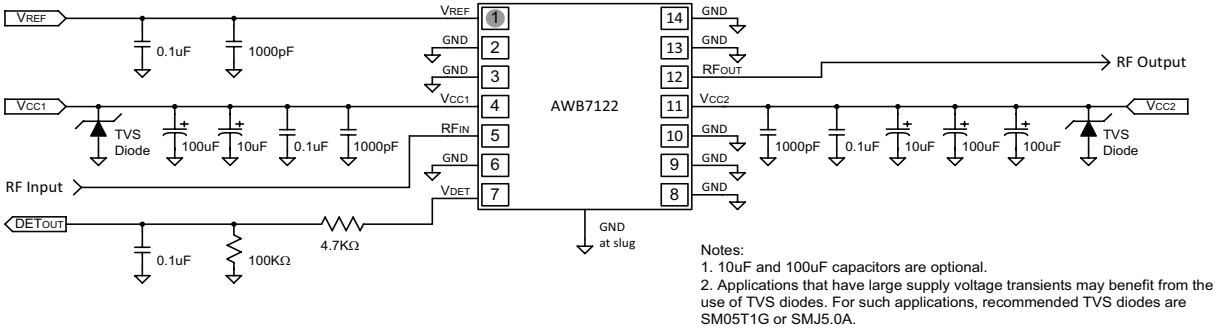

Figure 3: Application Circuit Schematic

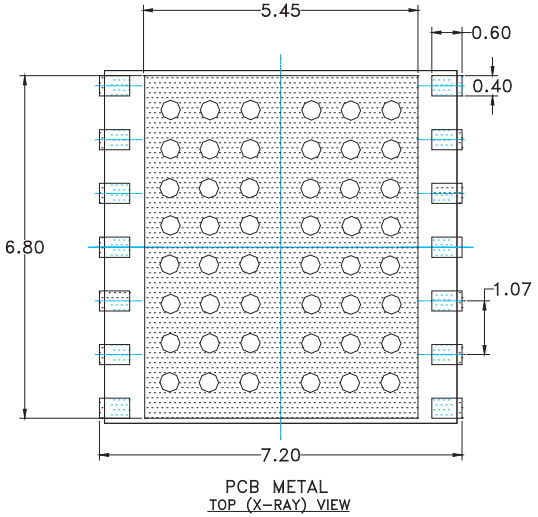

NOTES:

(1) UNLESS SPECIFIED DIMENSIONS ARE SYMMETRICAL ABOUT CENTER LINES SHOWN.

(2) DIMENSIONS IN MILLIMETERS.

(3) VIAS SHOWN IN PCB METAL VIEW ARE FOR REFERENCE ONLY. NUMBER & SIZE OF THERMAL VIAS REQUIRED DEPENDENT ON HEAT DISSIPATION REQUIREMENT AND THE PCB PROCESS CAPABILITY.

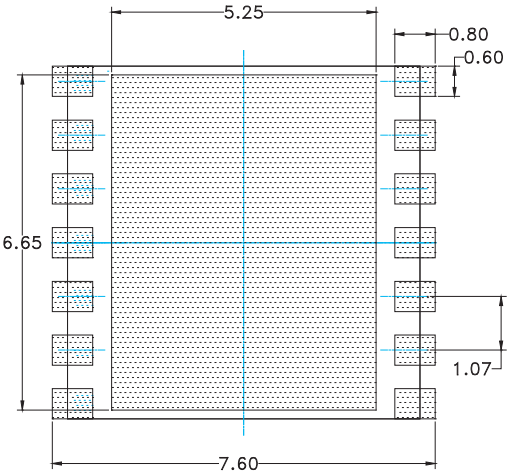

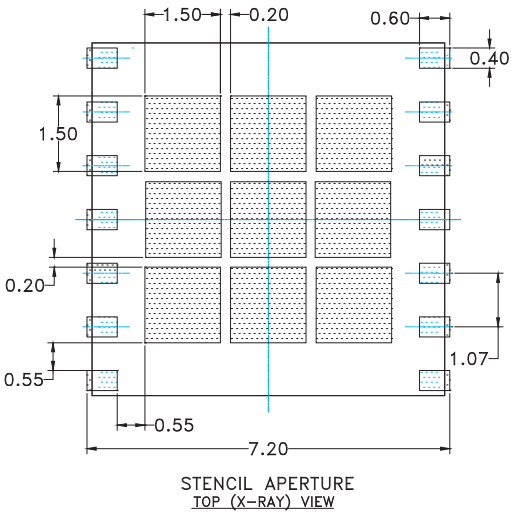

Figure 4: PCB Footprint

PACKAGE OUTLINE

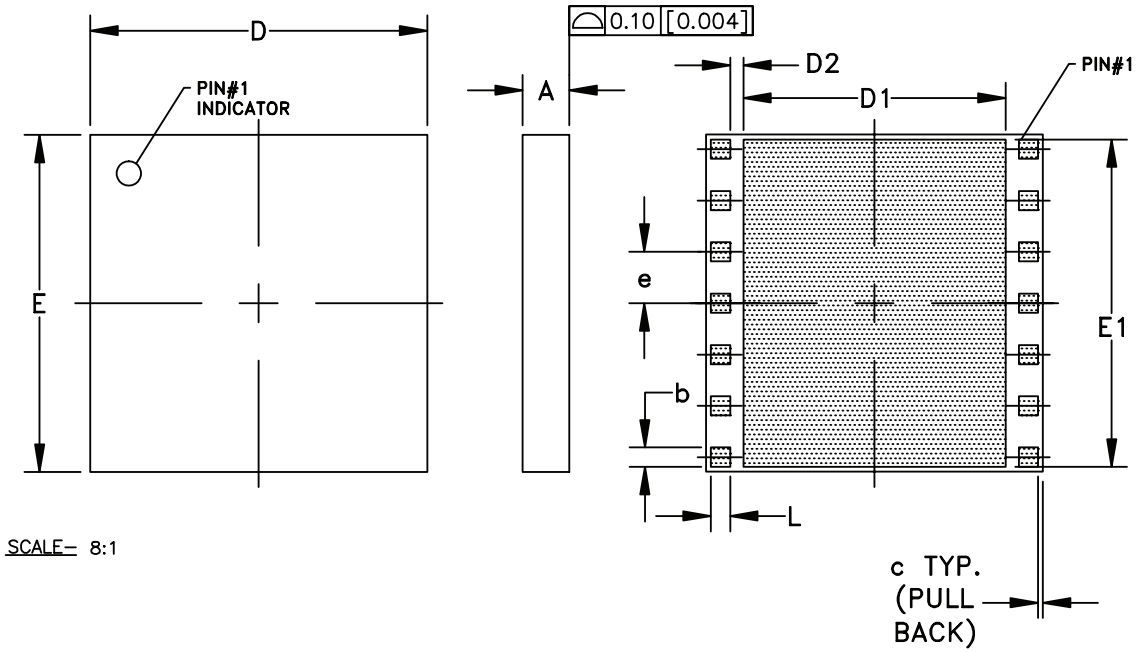

SYMBOL	MILLIMETERS			INCHES			NOTE
	MIN.	NOM.	MAX.	MIN.	NOM.	MAX.	
A	1.22	1.32	1.42	0.048	0.052	0.056	–
b	0.375	0.400	0.425	0.0148	0.0157	0.0167	14X
c	–	0.10	–	–	0.004	–	–
D	6.90	7.00	7.10	0.272	0.276	0.280	–
D1	–	5.45	–	–	0.215	–	–
D2	–	0.275	–	–	0.0108	–	–
E	6.90	7.00	7.10	0.272	0.276	0.280	–
E1	–	6.80	–	–	0.268	–	–
e	–	1.067	–	–	0.0420	–	6X
L	0.375	0.400	0.425	0.0148	0.0157	0.0167	14X

NOTES:

1. CONTROLLING DIMENSIONS: MILLIMETERS
2. UNLESS SPECIFIED TOLERANCE=±0.076[0.003].
3. PADS (INCLUDING CENTER) SHOWN UNIFORM SIZE FOR REFERENCE ONLY. ACTUAL PAD SIZE AND LOCATION WILL VARY WITHIN MIN. AND MAX. DIMENSIONS ACCORDING TO SPECIFIC LAMINATE DESIGN.

Figure 5: Package Outline - 14 Pin 7 mm x 7 mm x 1.3 mm Surface Mount Module

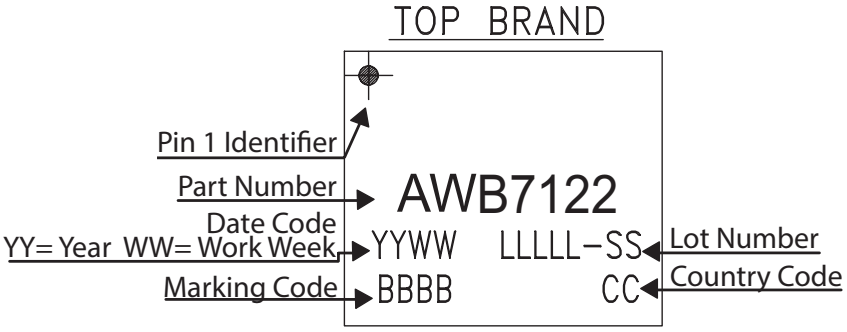

Figure 6: Branding Specification

COMPONENT PACKAGING

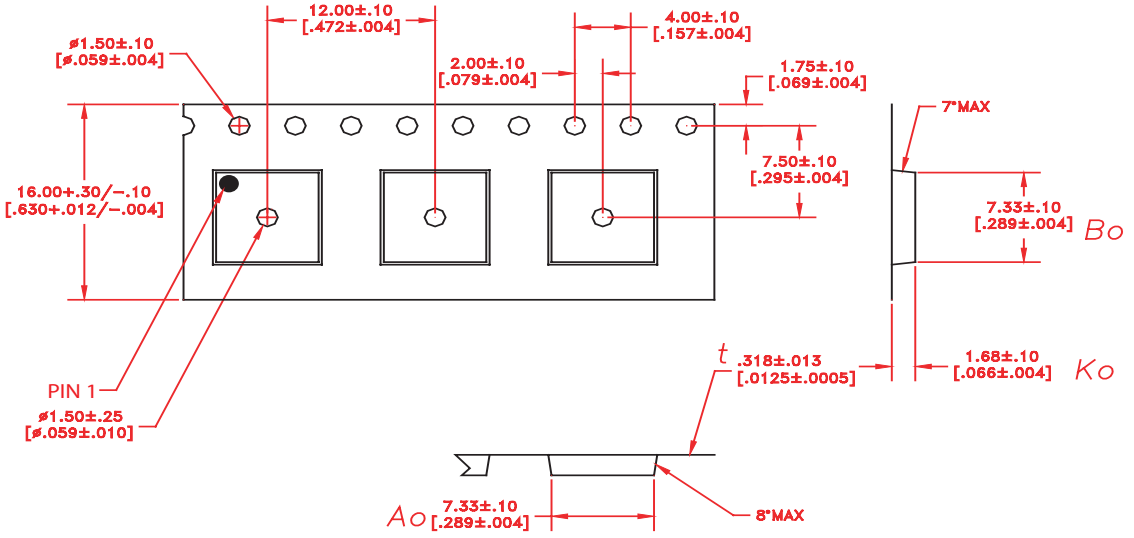

Figure 7: Tape & Reel Packaging

Table 5: Tape & Reel Dimensions

PACKAGE TYPE	TAPE WIDTH	POCKET PITCH	REEL CAPACITY	MAX REEL DIA
7 mm x 7 mm x 1.3 mm	16 mm	12 mm	2500	13"

ORDERING INFORMATION

ORDER NUMBER	TEMPERATURE RANGE	PACKAGE DESCRIPTION	COMPONENT PACKAGING
AWB7122P7	-40 °C to +85 °C	RoHS-compliant 14 Pin 7 mm x 7 mm x 1.3 mm Surface Mount Module	Loose in Bag
AWB7122P8	-40 °C to +85 °C	RoHS-compliant 14 Pin 7 mm x 7 mm x 1.3 mm Surface Mount Module	Tape and Reel, 2500 pieces per Reel
AWB7122P9	-40 °C to +85 °C	RoHS-compliant 14 Pin 7 mm x 7 mm x 1.3 mm Surface Mount Module	Partial Reel

Copyright © 2016 Skyworks Solutions, Inc. All Rights Reserved.

Information in this document is provided in connection with Skyworks Solutions, Inc. (“Skyworks”) products or services. These materials, including the information contained herein, are provided by Skyworks as a service to its customers and may be used for informational purposes only by the customer. Skyworks assumes no responsibility for errors or omissions in these materials or the information contained herein. Skyworks may change its documentation, products, services, specifications or product descriptions at any time, without notice. Skyworks makes no commitment to update the materials or information and shall have no responsibility whatsoever for conflicts, incompatibilities, or other difficulties arising from any future changes.

No license, whether express, implied, by estoppel or otherwise, is granted to any intellectual property rights by this document. Skyworks assumes no liability for any materials, products or information provided hereunder, including the sale, distribution, reproduction or use of Skyworks products, information or materials, except as may be provided in Skyworks Terms and Conditions of Sale.

THE MATERIALS, PRODUCTS AND INFORMATION ARE PROVIDED “AS IS” WITHOUT WARRANTY OF ANY KIND, WHETHER EXPRESS, IMPLIED, STATUTORY, OR OTHERWISE, INCLUDING FITNESS FOR A PARTICULAR PURPOSE OR USE, MERCHANTABILITY, PERFORMANCE, QUALITY OR NON-INFRINGEMENT OF ANY INTELLECTUAL PROPERTY RIGHT; ALL SUCH WARRANTIES ARE HEREBY EXPRESSLY DISCLAIMED. SKYWORKS DOES NOT WARRANT THE ACCURACY OR COMPLETENESS OF THE INFORMATION, TEXT, GRAPHICS OR OTHER ITEMS CONTAINED WITHIN THESE MATERIALS. SKYWORKS SHALL NOT BE LIABLE FOR ANY DAMAGES, INCLUDING BUT NOT LIMITED TO ANY SPECIAL, INDIRECT, INCIDENTAL, STATUTORY, OR CONSEQUENTIAL DAMAGES, INCLUDING WITHOUT LIMITATION, LOST REVENUES OR LOST PROFITS THAT MAY RESULT FROM THE USE OF THE MATERIALS OR INFORMATION, WHETHER OR NOT THE RECIPIENT OF MATERIALS HAS BEEN ADVISED OF THE POSSIBILITY OF SUCH DAMAGE.

Skyworks products are not intended for use in medical, lifesaving or life-sustaining applications, or other equipment in which the failure of the Skyworks products could lead to personal injury, death, physical or environmental damage. Skyworks customers using or selling Skyworks products for use in such applications do so at their own risk and agree to fully indemnify Skyworks for any damages resulting from such improper use or sale.
Customers are responsible for their products and applications using Skyworks products, which may deviate from published specifications as a result of design defects, errors, or operation of products outside of published parameters or design specifications.

Customers should include design and operating safeguards to minimize these and other risks. Skyworks assumes no liability for applications assistance, customer product design, or damage to any equipment resulting from the use of Skyworks products outside of stated published specifications or parameters.

Skyworks and the Skyworks symbol are trademarks or registered trademarks of Skyworks Solutions, Inc., in the United States and other countries. Third-party brands and names are for identification purposes only, and are the property of their respective owners. Additional information, including relevant terms and conditions, posted at www.skyworksinc.com, are incorporated by reference.

Skyworks Solutions, Inc.
Phone [781] 376-3000 • Fax [781] 376-3100 • sales@skyworksinc.com • www.skyworksinc.com
Skyworks Proprietary and Confidential information • Products and Product Information are Subject to Change Without Notice