

RoHS Compliant

CIT RELAY & SWITCH™
Division of Circuit Interruption Technology, Inc.

DH22U

E222871 UL Approved Illuminated Pushbutton

Specifications

Electrical Ratings	3A @ 125VAC, 65˚C, 50K cycles 3A @ 250VAC, 65˚C, 50K cycles
Electrical Life	50,000 cycles typical
Mechanical Life	1,000,000 cycles typical momentary 500,000 cycles typical latching
Contact Resistance	≤ 50mΩ initial

Actuation Force	200 ±50gF SPDT 250 ±50gF DPDT
Actuation Travel	3.2 ± .25mm
Dielectric Strength	2,000Vrms min between contacts
Insulation Resistance	≥ 1,000MΩ min @ 500VDC
Sealing Degree	IP65
Operating Temperature	-20ºC to 55ºC
Storage Temperature	-20ºC to 55ºC

Materials

Actuator	Stainless Steel, Anodized Aluminum
LED Lens	Polycarbonate (PC)
Threaded Body	Stainless Steel, Anodized Aluminum
Terminal Support	Polybutylene Terephthalate (PBT)
Inner Switch Body	Polybutylene Terephthalate (PBT)
Contacts	Silver plated Copper Alloy
Terminals	Silver plated Copper Alloy
Hardware	One Hex Nut & One “O” Ring Supplied

Ordering Information

1. Series	DH22U	1	N	B	S	R	12

DH22U

2. Number of Poles
   1 = SPDT
   2 = DPDT

3. Latching Option
   N = Momentary
   L = Latching

4. Actuator Style:
   A = Flush actuator, non-illuminated
   B = Flush actuator, ring illuminated

5. Switch Finish
   S = Stainless Steel
   B = Black Anodized Aluminum

6. First LED Color
   Z = No LED
   R = Red
   Y = Yellow
   G = Green
   B = Blue
   W = White

7. LED Voltage
   Z = No LED 24 = 24V
   6 = 6V 110 = 110V
   12 = 12V 220 = 220V
   N = No internal resistor in series with the LED

Dimensions shown in mm. Dimensions are shown for reference purposes only.

Specifications and availability subject to change without notice.

CIT RELAY & SWITCH™
Division of Circuit Interruption Technology, Inc.

DH22U

UL Approved Illuminated Pushbutton

Dimensions

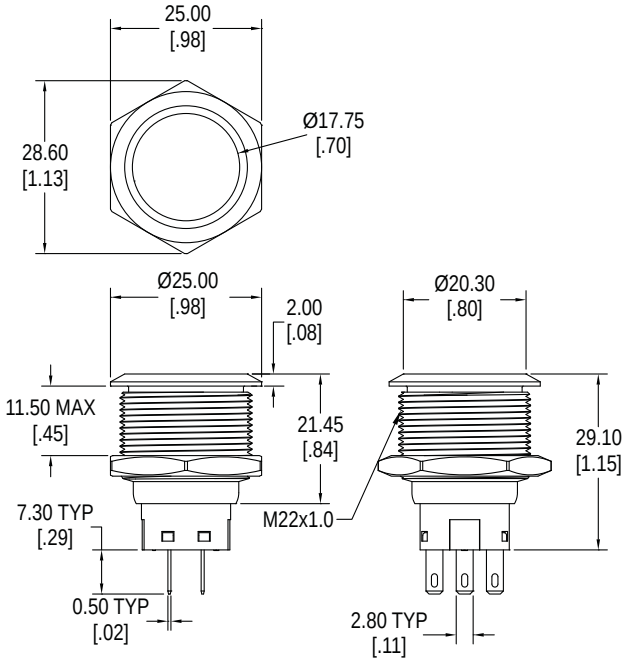

A - Flush Actuator, Non-illuminated

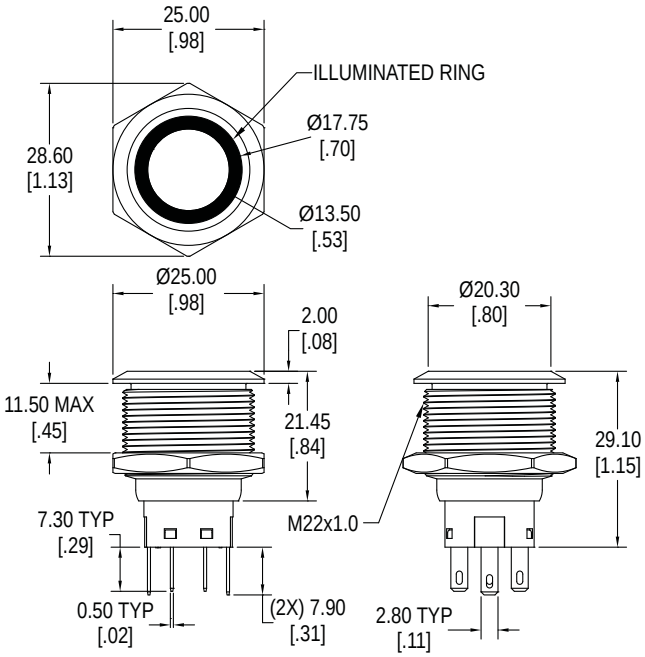

B - Flush Actuator, Ring Illuminated

Schematics

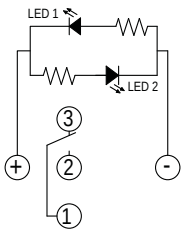

SPDT

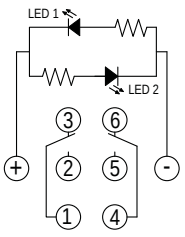

DPDT

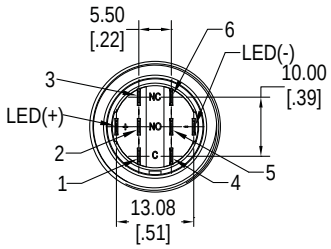

Bottom View

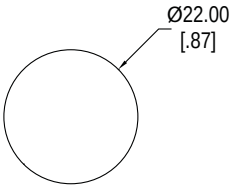

Panel Cut-Out

Dimensions shown in mm. Dimensions are shown for reference purposes only.

Specifications and availability subject to change without notice.

Optional Socket Housing

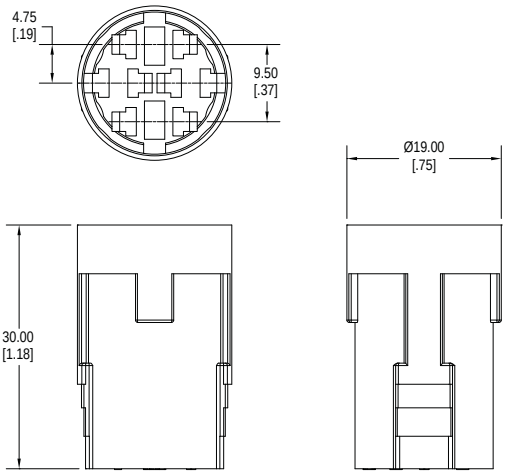

SS2002

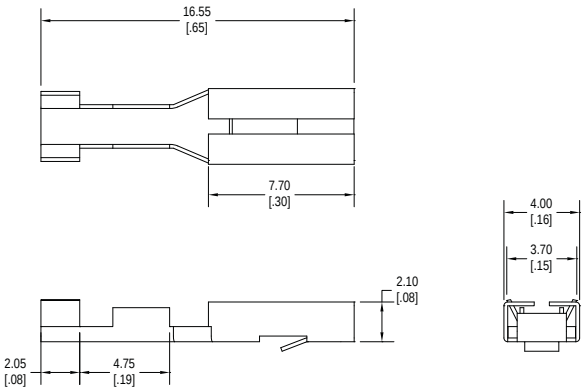

Terminal
for use with wire sizes 18AWG to 24AWG

LED Characteristics

LED Ratings		Color					
		R	Y	G	B	W	Units
Reverse Voltage	V_R	5	5	5	5	5	V
Forward Current (peak)	I_{FS}	120	120	160	160	160	mA
Reverse Current V_R = 5V	I_R	10	10	10	10	10	µA
Power Dissipation	P_T	80	80	120	120	120	mW
Forward Voltage (typ) I_F = 20mA	V_F	2.1	2.1	3.3	3.3	3.0	V
Luminous Intensity, I_F = 20mA	LI	120	120	170	100	700	mcd

Dimensions shown in mm. Dimensions are shown for reference purposes only.

Specifications and availability subject to change without notice.

CIT RELAY & SWITCH™
Division of Circuit Interruption Technology, Inc.

WP

Wall Plate



Features

- Fits standard size electrical boxes
- Multiple size options
- 2 finish options
- Laser etching available

Ordering Information

1. Series	WP	B	22	A	X
WP					
2. Size: A = 40mm x 115mm B = 70mm x 115mm C = 86mm x 86mm					
3. Hole Size: 22 = 22mm diameter					
4. Material A = Brushed aluminum Y = Brushed aluminum, yellow anodized					
5. Laser Etching Symbol: Contact Factory with artwork					

Dimensions

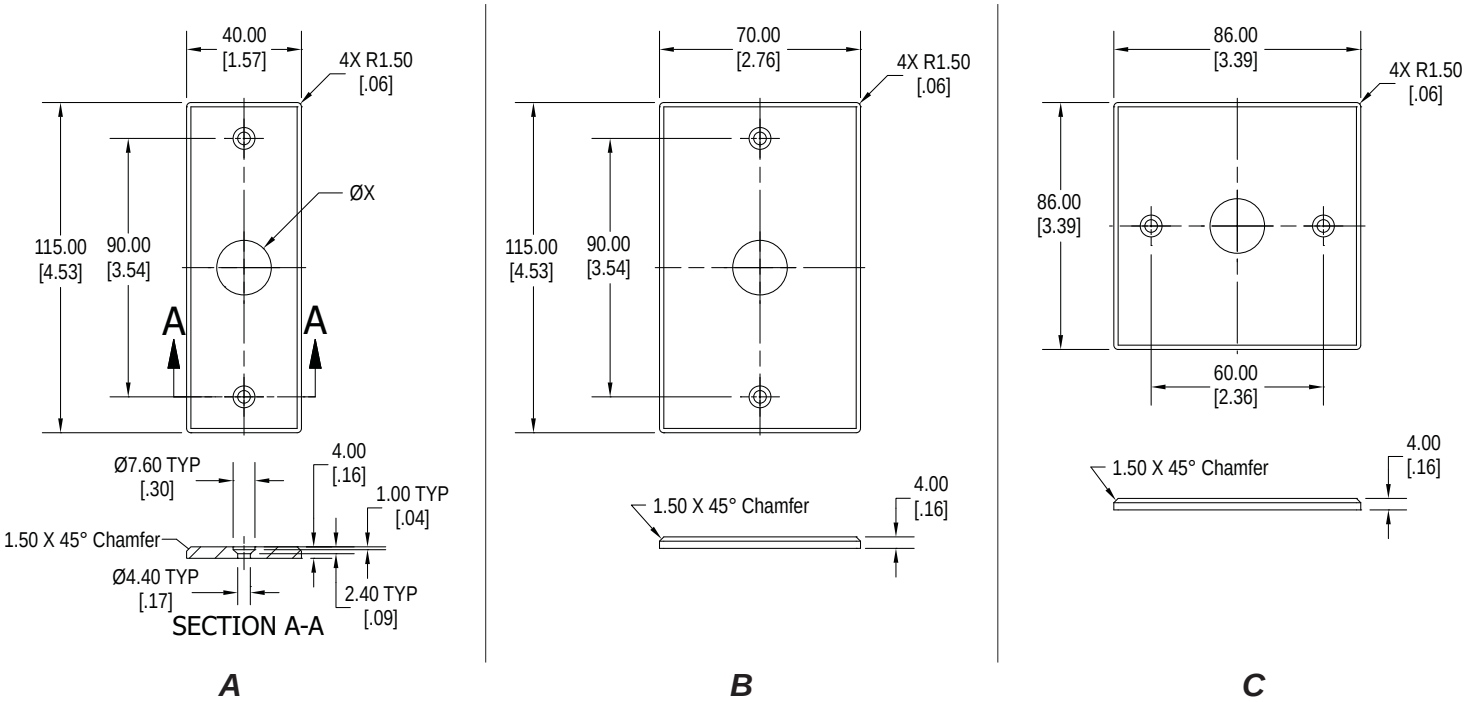

www.citrelay.com phone - 763.535.2339 fax - 763.535.2194

Dimensions shown in mm. Dimensions are shown for reference purposes only.

Specifications and availability subject to change without notice.

CIT RELAY & SWITCH™
Division of Circuit Interruption Technology, Inc.

AVH

Aluminum Anti-Vandal Switch Housing



Features

- Easy installation
- Multiple size options
- Aluminum housing

Ordering Information

1. Series	AVH	F	4	22
AVH				
2. Mounting Options: F = With mounting flange T = Without mounting flange				
3. Number of Positions: 1 = 1 position 2 = 2 positions 3 = 3 positions 4 = 4 positions 5 = 5 positions Contact Factory for custom sizes and number of positions				
4. Hole Size: 22 = 22mm diameter				

Dimensions

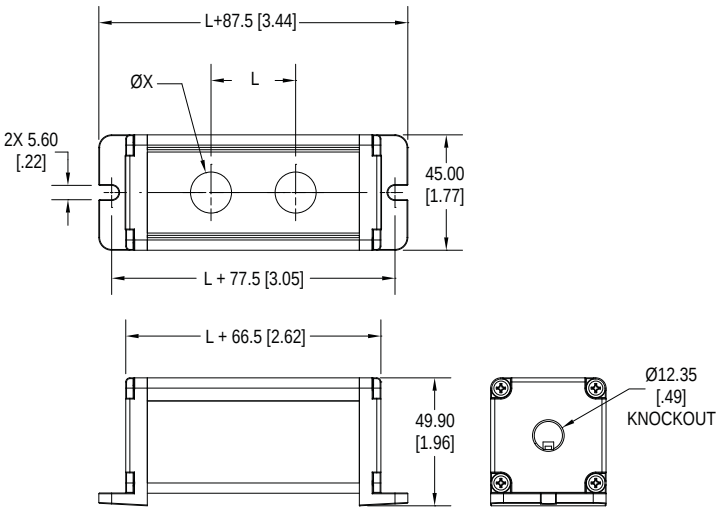

F

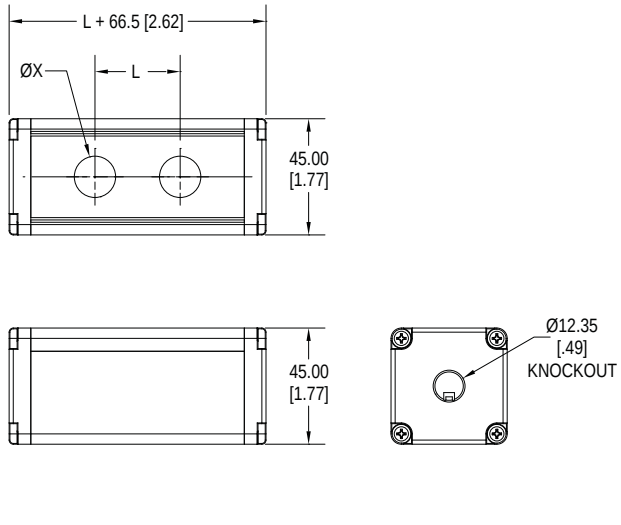

T

Dimensions shown in mm. Dimensions are shown for reference purposes only.

Specifications and availability subject to change without notice.