International
IOR Rectifier

**AUTOMOTIVE GRADE**

PD - 96400A

# AUIRFS3004
# AUIRFSL3004

HEXFET® Power MOSFET

### Features

- Advanced Process Technology
- Ultra Low On-Resistance
- 175°C Operating Temperature
- Fast Switching
- Repetitive Avalanche Allowed up to Tjmax
- Lead-Free, RoHS Compliant
- Automotive Qualified *

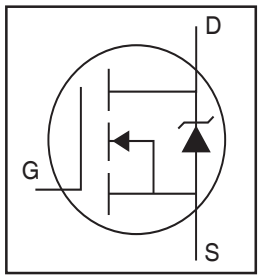


| | |
|---|---|
| $V_{DSS}$ | 40V |
| $R_{DS(on)}$ typ. | 1.4mΩ |
| max. | 1.75mΩ |
| $I_D$ (Silicon Limited) | 340A① |
| $I_D$ (Package Limited) | 195A |

### Description

Specifically designed for Automotive applications, this HEXFET® Power MOSFET utilizes the latest processing techniques to achieve extremely low on-resistance per silicon area. Additional features of this design are a 175°C junction operating temperature, fast switching speed and improved repetitive avalanche rating . These features combine to make this design an extremely efficient and reliable device for use in Automotive applications and a wide variety of other applications.

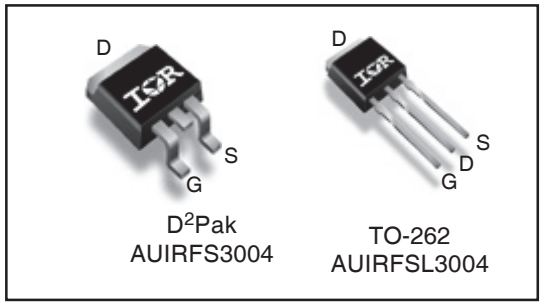


$D^2Pak$
AUIRFS3004

TO-262
AUIRFSL3004

| G | D | S |
|---|---|---|
| Gate | Drain | Source |

### Absolute Maximum Ratings

Stresses beyond those listed under "Absolute Maximum Ratings" may cause permanent damage to the device. These are stress ratings only; and functional operation of the device at these or any other condition beyond those indicated in the specifications is not implied.Exposure to absolute-maximum-rated conditions for extended periods may affect device reliability. The thermal resistance and power dissipation ratings are measured under board mounted and still air conditions. Ambient temperature ($T_A$) is 25°C, unless otherwise specified.

| | Parameter | Max. | Units |
|---|---|---|---|
| $I_D$ @ $T_C$ = 25°C | Continuous Drain Current, $V_{GS}$ @ 10V (Silicon Limited) | 340① | A |
| $I_D$ @ $T_C$ = 100°C | Continuous Drain Current, $V_{GS}$ @ 10V (Silicon Limited) | 240① | |
| $I_D$ @ $T_C$ = 25°C | Continuous Drain Current, $V_{GS}$ @ 10V (Package Limited) | 195 | |
| $I_{DM}$ | Pulsed Drain Current ② | 1310 | |
| $P_D$ @$T_C$ = 25°C | Maximum Power Dissipation | 380 | W |
| | Linear Derating Factor | 2.5 | W/°C |
| $V_{GS}$ | Gate-to-Source Voltage | ± 20 | V |
| dv/dt | Peak Diode Recovery ④ | 4.4 | V/ns |
| $E_{AS\ (Thermally\ limited)}$ | Single Pulse Avalanche Energy ③ | 300 | mJ |
| $I_{AR}$ | Avalanche Current ② | See Fig. 14, 15, 22a, 22b | A |
| $E_{AR}$ | Repetitive Avalanche Energy ② | | mJ |
| $T_J$<br>$T_{STG}$ | Operating Junction and<br>Storage Temperature Range | -55 to + 175 | °C |
| | Soldering Temperature, for 10 seconds (1.6mm from case) | 300 | |

### Thermal Resistance

| | Parameter | Typ. | Max. | Units |
|---|---|---|---|---|
| $R_{\theta JC}$ | Junction-to-Case ⑨⑩ | — | 0.40 | °C/W |
| $R_{\theta JA}$ | Junction-to-Ambient (PCB Mount) , $D^2Pak$ ⑧ | — | 40 | |

HEXFET® is a registered trademark of International Rectifier.
*Qualification standards can be found at http://www.irf.com/

**Static Electrical Characteristics @ $T_J$ = 25°C (unless otherwise specified)**

| | Parameter | Min. | Typ. | Max. | Units | Conditions |
|---|---|---|---|---|---|---|
| $V_{(BR)DSS}$ | Drain-to-Source Breakdown Voltage | 40 | — | — | V | $V_{GS}$ = 0V, $I_D$ = 250µA |
| $\Delta V_{(BR)DSS}/\Delta T_J$ | Breakdown Voltage Temp. Coefficient | — | 0.037 | — | V/°C | Reference to 25°C, $I_D$ = 5mA② |
| $R_{DS(on)}$ | Static Drain-to-Source On-Resistance | — | 1.4 | 1.75 | mΩ | $V_{GS}$ = 10V, $I_D$ = 195A ⑤ |
| $V_{GS(th)}$ | Gate Threshold Voltage | 2.0 | — | 4.0 | V | $V_{DS}$ = $V_{GS}$, $I_D$ = 250µA |
| gfs | Forward Transconductance | 1170 | — | — | S | $V_{DS}$ = 10V, $I_D$ = 195A |
| $I_{DSS}$ | Drain-to-Source Leakage Current | — | — | 20 | µA | $V_{DS}$ = 40V, $V_{GS}$ = 0V |
| | | — | — | 250 | | $V_{DS}$ = 40V, $V_{GS}$ = 0V, $T_J$ = 125°C |
| $I_{GSS}$ | Gate-to-Source Forward Leakage | — | — | 100 | nA | $V_{GS}$ = 20V |
| | Gate-to-Source Reverse Leakage | — | — | -100 | | $V_{GS}$ = -20V |
| $R_G$ | Internal Gate Resistance | — | 2.2 | — | Ω | |

**Dynamic Electrical Characteristics @ $T_J$ = 25°C (unless otherwise specified)**

| | Parameter | Min. | Typ. | Max. | Units | Conditions |
|---|---|---|---|---|---|---|
| $Q_g$ | Total Gate Charge | — | 160 | 240 | nC | $I_D$ = 187A |
| $Q_{gs}$ | Gate-to-Source Charge | — | 40 | — | | $V_{DS}$ =20V |
| $Q_{gd}$ | Gate-to-Drain ("Miller") Charge | — | 68 | — | | $V_{GS}$ = 10V ⑤ |
| $Q_{sync}$ | Total Gate Charge Sync. ($Q_g$ - $Q_{gd}$) | — | 92 | — | | $I_D$ = 187A, $V_{DS}$ =0V, $V_{GS}$ = 10V |
| $t_{d(on)}$ | Turn-On Delay Time | — | 23 | — | ns | $V_{DD}$ = 26V |
| $t_r$ | Rise Time | — | 220 | — | | $I_D$ = 195A |
| $t_{d(off)}$ | Turn-Off Delay Time | — | 90 | — | | $R_G$ = 2.7Ω |
| $t_f$ | Fall Time | — | 130 | — | | $V_{GS}$ = 10V ⑤ |
| $C_{iss}$ | Input Capacitance | — | 9200 | — | pF | $V_{GS}$ = 0V |
| $C_{oss}$ | Output Capacitance | — | 2020 | — | | $V_{DS}$ = 25V |
| $C_{rss}$ | Reverse Transfer Capacitance | — | 1340 | — | | $f$ = 1.0 MHz, See Fig. 5 |
| $C_{oss}$ eff. (ER) | Effective Output Capacitance (Energy Related) ⑦ | — | 2440 | — | | $V_{GS}$ = 0V, $V_{DS}$ = 0V to 32V, See Fig. 11 |
| $C_{oss}$ eff. (TR) | Effective Output Capacitance (Time Related)⑥ | — | 2690 | — | | $V_{GS}$ = 0V, $V_{DS}$ = 0V to 32V |

**Diode Characteristics**

| | Parameter | Min. | Typ. | Max. | Units | Conditions |
|---|---|---|---|---|---|---|
| $I_S$ | Continuous Source Current (Body Diode) | — | — | 340① | A | MOSFET symbol showing the integral reverse p-n junction diode. |
| $I_{SM}$ | Pulsed Source Current (Body Diode) ② | — | — | 1310 | | |
| $V_{SD}$ | Diode Forward Voltage | — | — | 1.3 | V | $T_J$ = 25°C, $I_S$ = 195A, $V_{GS}$ = 0V ⑤ |
| $t_{rr}$ | Reverse Recovery Time | — | 27 | — | ns | $T_J$ = 25°C $V_R$ = 34V, |
| | | — | 31 | — | | $T_J$ = 125°C $I_F$ = 195A |
| $Q_{rr}$ | Reverse Recovery Charge | — | 18 | — | nC | $T_J$ = 25°C di/dt = 100A/µs ⑤ |
| | | — | 41 | — | | $T_J$ = 125°C |
| $I_{RRM}$ | Reverse Recovery Current | — | 1.2 | — | A | $T_J$ = 25°C |
| $t_{on}$ | Forward Turn-On Time | Intrinsic turn-on time is negligible (turn-on is dominated by LS+LD) | | | | |

**Notes:**

① Calculated continuous current based on maximum allowable junction temperature. Bond wire current limit is 195A. Note that current limitations arising from heating of the device leads may occur with some lead mounting arrangements. (Refer to AN-1140)

② Repetitive rating; pulse width limited by max. junction temperature.

③ Limited by $T_{Jmax}$, starting $T_J$ = 25°C, L = 0.016mH, $R_G$ = 25Ω, $I_{AS}$ = 195A, $V_{GS}$ =10V. Part not recommended for use above this value .

④ $I_{SD}$ ≤ 195A, di/dt ≤ 930A/µs, $V_{DD}$ ≤ $V_{(BR)DSS}$, $T_J$ ≤ 175°C.

⑤ Pulse width ≤ 400µs; duty cycle ≤ 2%.

⑥ $C_{oss}$ eff. (TR) is a fixed capacitance that gives the same charging time as $C_{oss}$ while $V_{DS}$ is rising from 0 to 80% $V_{DSS}$.

⑦ $C_{oss}$ eff. (ER) is a fixed capacitance that gives the same energy as $C_{oss}$ while $V_{DS}$ is rising from 0 to 80% $V_{DSS}$.

⑧ When mounted on 1" square PCB (FR-4 or G-10 Material). For recommended footprint and soldering techniques refer to application note #AN-994.

⑨ $R_\theta$ is measured at $T_J$ approximately 90°C.

⑩ $R_{\theta JC}$ value shown is at time zero.

## Qualification Information†

| | | | |
|---|---|---|---|
| **Qualification Level** | | Automotive (per AEC-Q101) †† | |
| | | Comments: This part number(s) passed Automotive qualification. IR's Industrial and Consumer qualification level is granted by extension of the higher Automotive level. | |
| **Moisture Sensitivity Level** | | 3L-D2 PAK | MSL1 |
| | | 3L-TO-262 | N/A |
| **ESD** | Machine Model | Class M4(+/- 800V )††† AEC-Q101-002 | |
| | Human Body Model | Class H3A(+/- 6000V )††† AEC-Q101-001 | |
| | Charged Device Model | Class C5(+/- 2000V )††† AEC-Q101-005 | |
| **RoHS Compliant** | | Yes | |

† Qualification standards can be found at International Rectifier's web site: http//www.irf.com/

†† Exceptions (if any) to AEC-Q101 requirements are noted in the qualification report.

††† Highest passing voltage

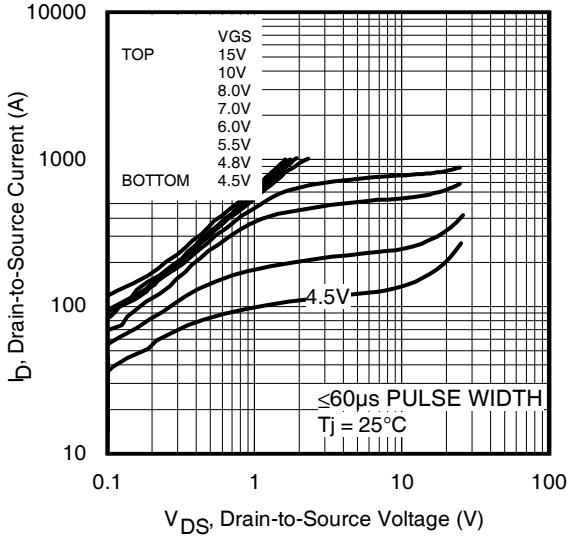


**Fig 1.** Typical Output Characteristics

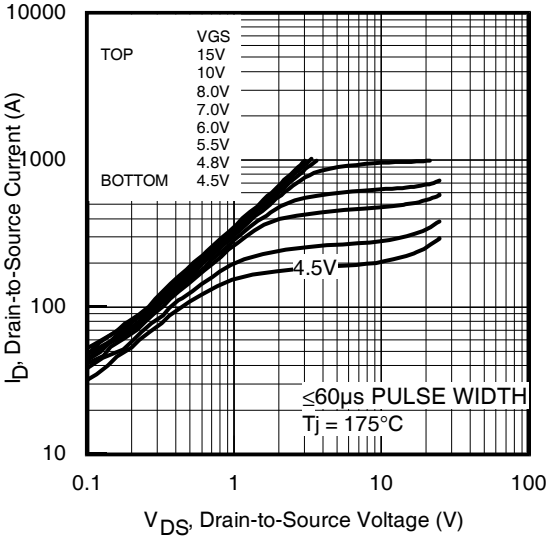


**Fig 2.** Typical Output Characteristics

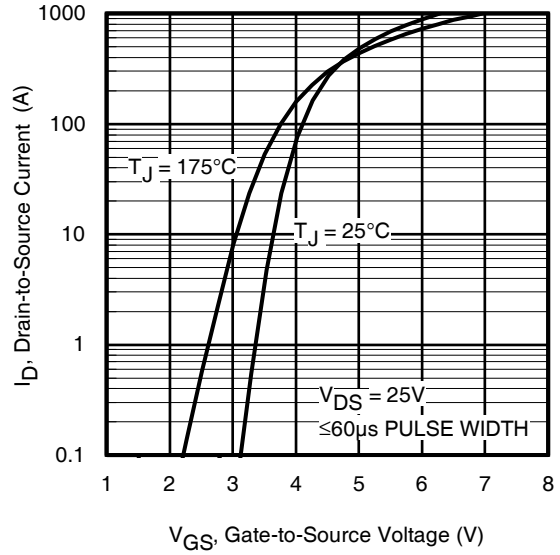


**Fig 3.** Typical Transfer Characteristics

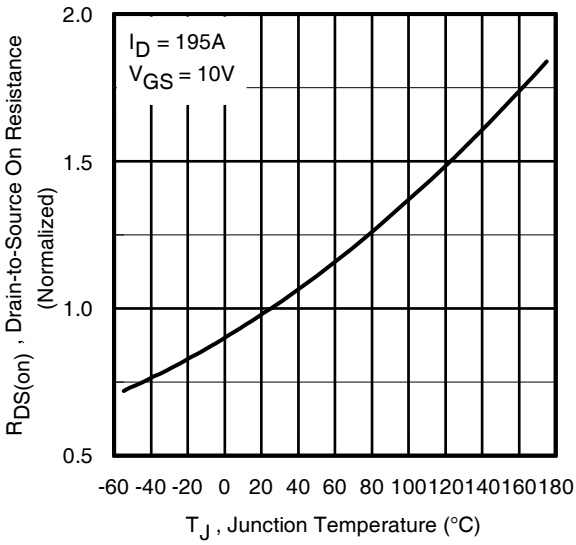


**Fig 4.** Normalized On-Resistance vs. Temperature

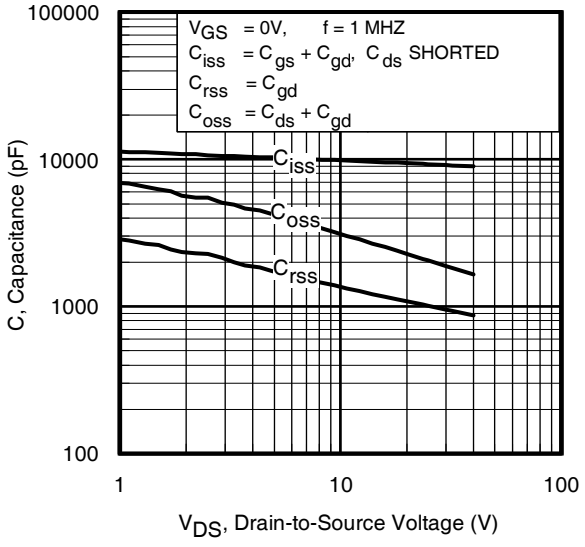


**Fig 5.** Typical Capacitance vs. Drain-to-Source Voltage

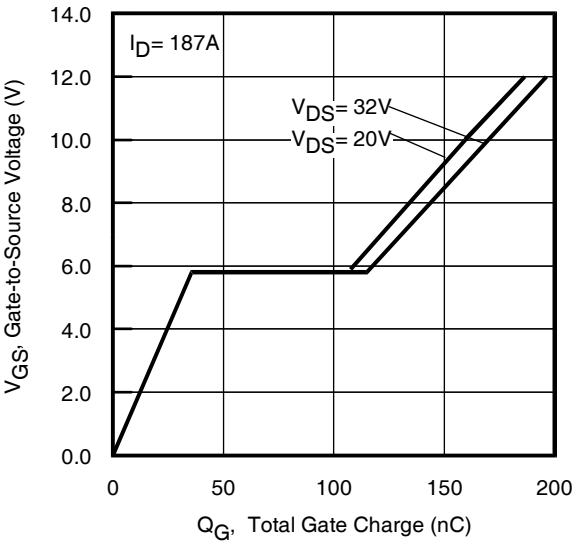


**Fig 6.** Typical Gate Charge vs. Gate-to-Source Voltage

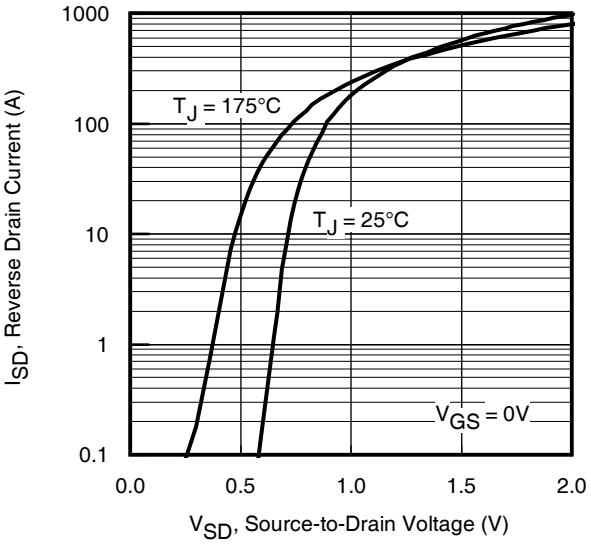


**Fig 7.** Typical Source-Drain Diode Forward Voltage

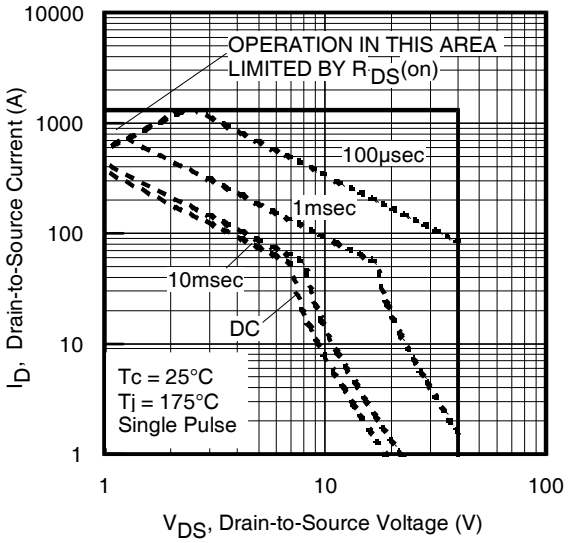


**Fig 8.** Maximum Safe Operating Area

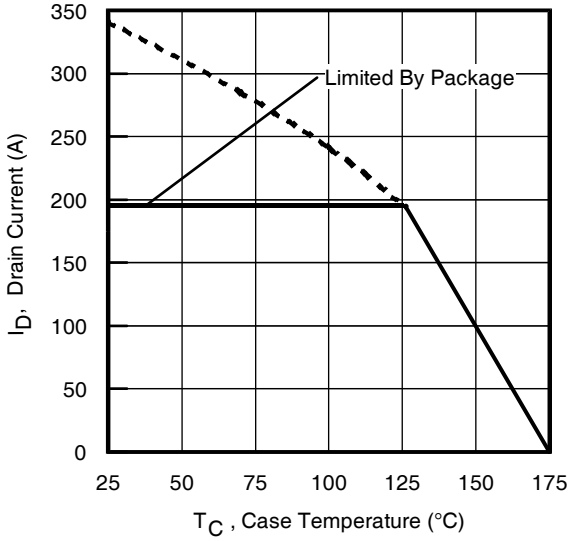


**Fig 9.** Maximum Drain Current vs. Case Temperature

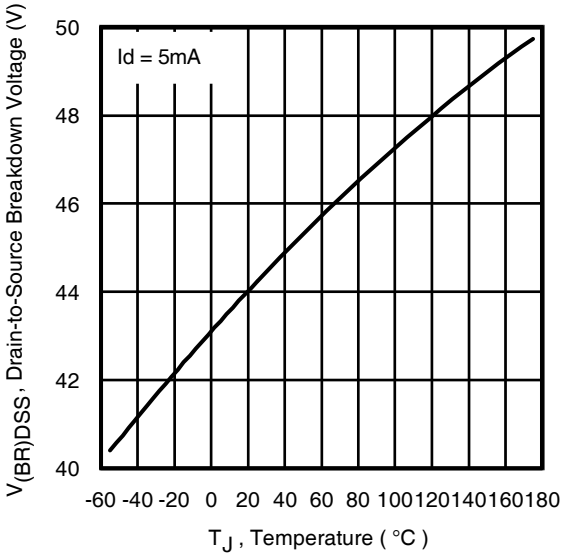


**Fig 10.** Drain-to-Source Breakdown Voltage

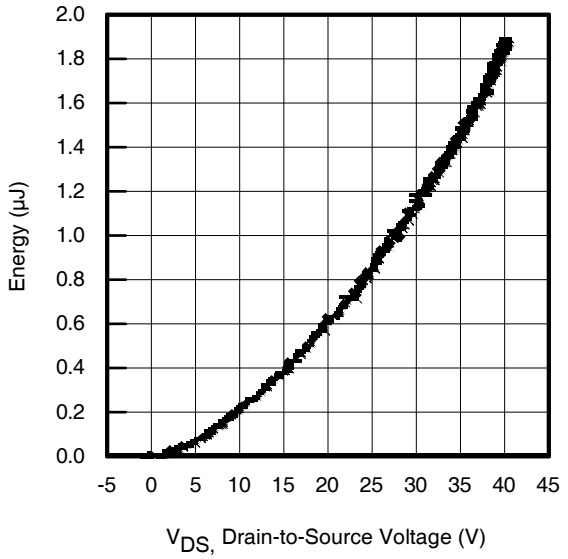


**Fig 11.** Typical $C_{OSS}$ Stored Energy

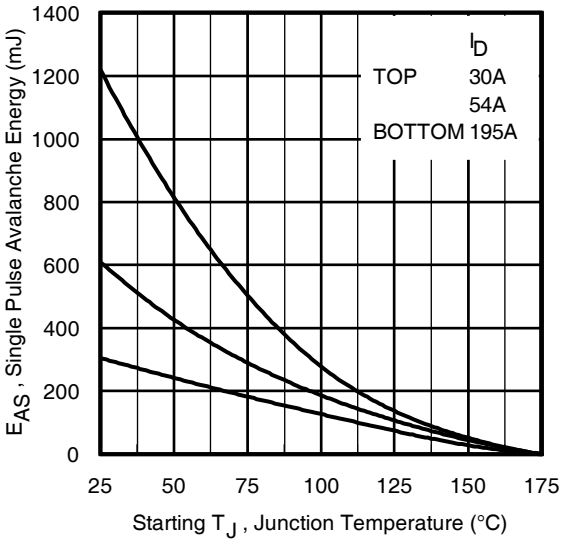


**Fig 12.** Maximum Avalanche Energy vs. DrainCurrent

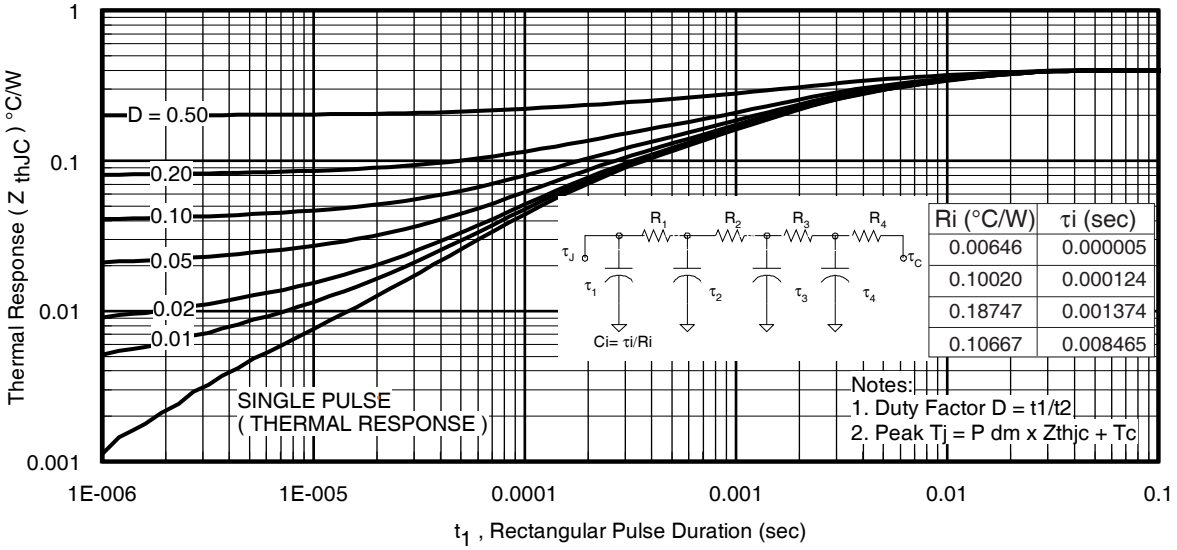


**Fig 13.** Maximum Effective Transient Thermal Impedance, Junction-to-Case

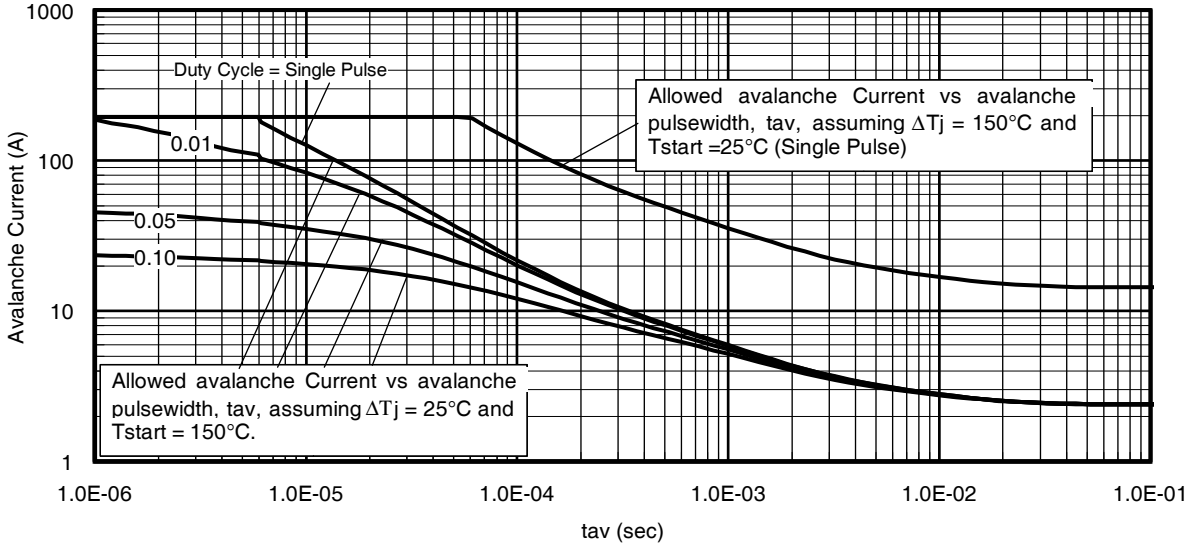


**Fig 14.** Typical Avalanche Current vs.Pulsewidth

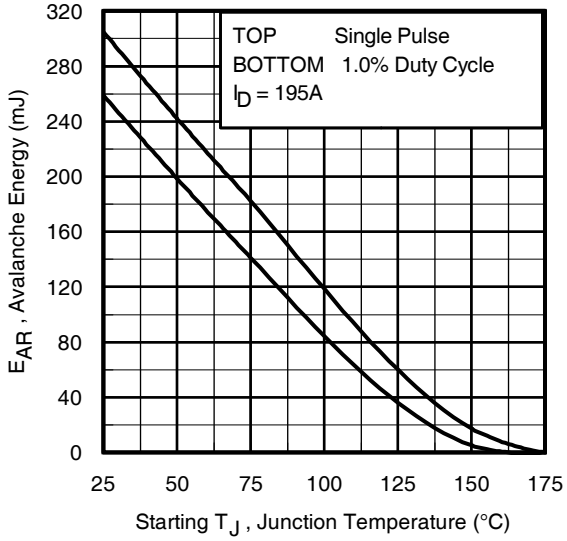


**Fig 15.** Maximum Avalanche Energy vs. Temperature

**Notes on Repetitive Avalanche Curves , Figures 14, 15:**
**(For further info, see AN-1005 at www.irf.com)**

1. Avalanche failures assumption:
   Purely a thermal phenomenon and failure occurs at a temperature far in excess of $T_{jmax}$. This is validated for every part type.
2. Safe operation in Avalanche is allowed as long as$T_{jmax}$ is not exceeded.
3. Equation below based on circuit and waveforms shown in Figures 22a, 22b.
4. $P_{D\ (ave)}$ = Average power dissipation per single avalanche pulse.
5. BV = Rated breakdown voltage (1.3 factor accounts for voltage increase during avalanche).
6. $I_{av}$ = Allowable avalanche current.
7. $\Delta T$ = Allowable rise in junction temperature, not to exceed $T_{jmax}$ (assumed as 25°C in Figure 14, 15).
   $t_{av}$ = Average time in avalanche.
   D = Duty cycle in avalanche = $t_{av} \cdot f$
   $Z_{thJC}(D, t_{av})$ = Transient thermal resistance, see Figures 13)

$$P_{D\ (ave)} = 1/2\ (\ 1.3 \cdot BV \cdot I_{av}) = \Delta T / Z_{thJC}$$
$$I_{av} = 2\Delta T / [1.3 \cdot BV \cdot Z_{th}]$$
$$E_{AS\ (AR)} = P_{D\ (ave)} \cdot t_{av}$$

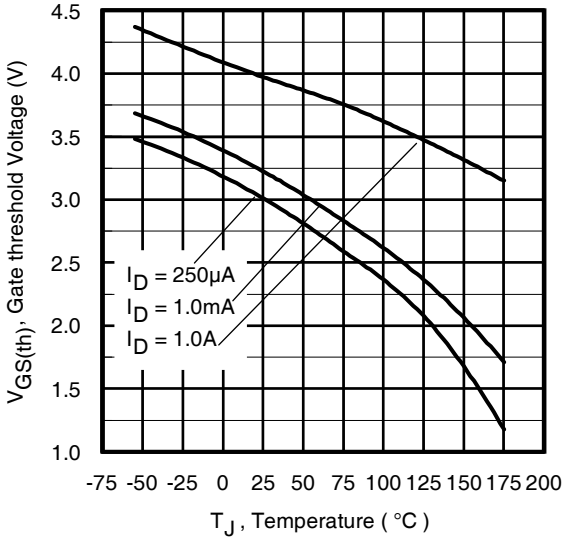


**Fig 16.** Threshold Voltage vs. Temperature

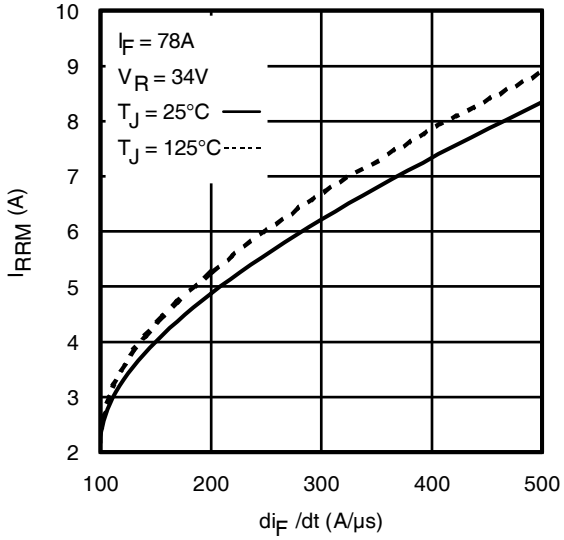


**Fig. 17** - Typical Recovery Current vs. $di_f/dt$

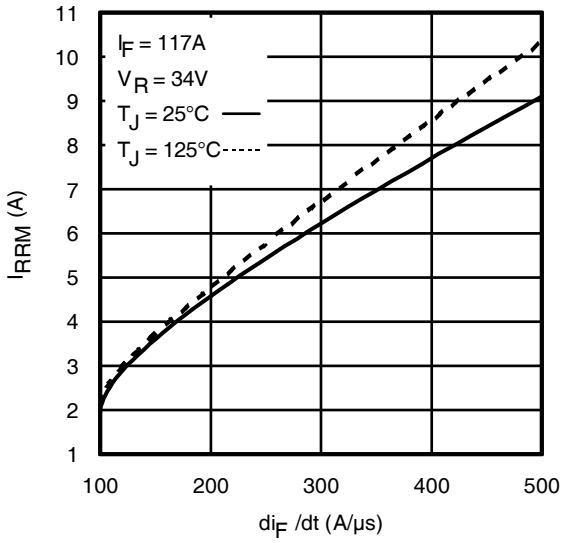


**Fig. 18** - Typical Recovery Current vs. $di_f/dt$

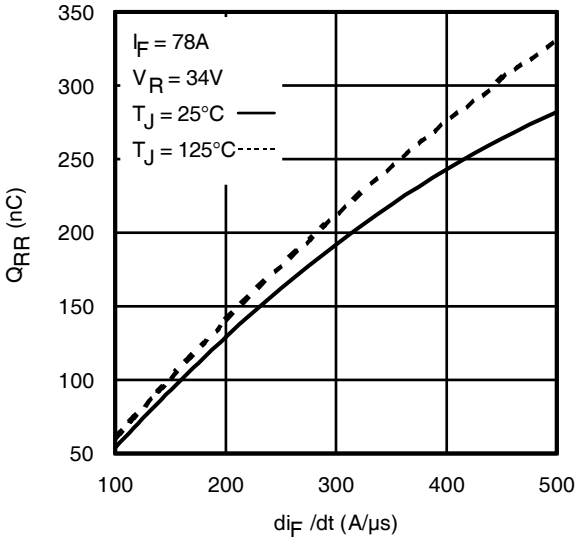


**Fig. 19** - Typical Stored Charge vs. $di_f/dt$

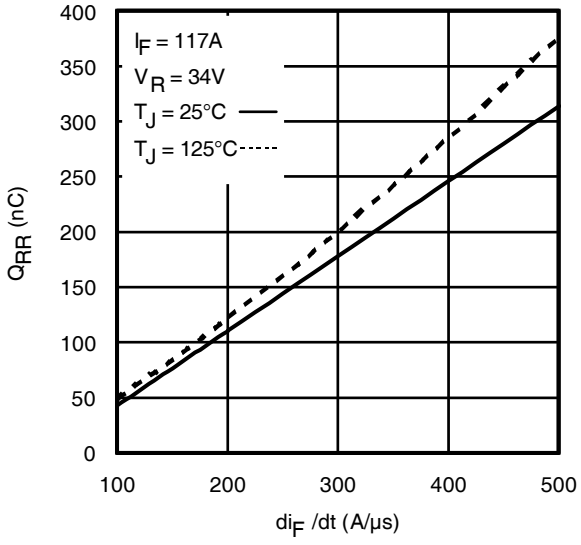


**Fig. 20** - Typical Stored Charge vs. $di_f/dt$

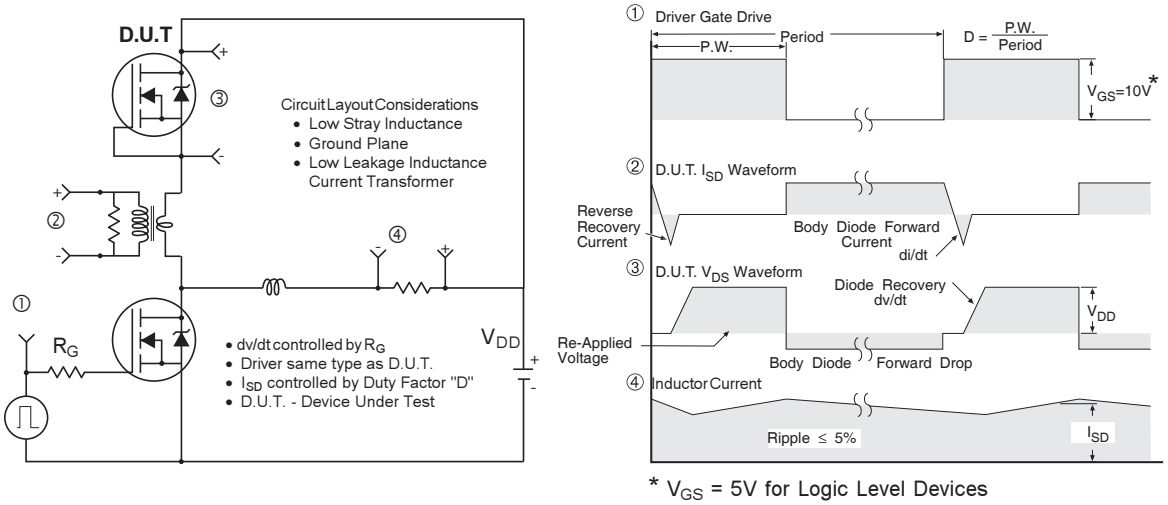


**Fig 21.** Peak Diode Recovery dv/dt Test Circuit for N-Channel HEXFET® Power MOSFETs

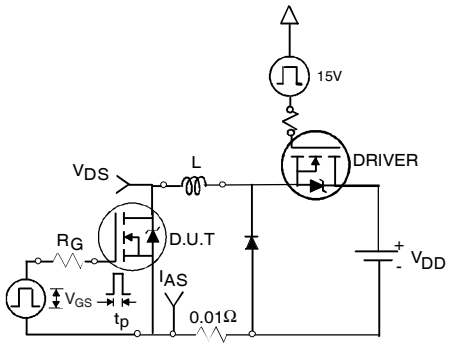


**Fig 22a.** Unclamped Inductive Test Circuit

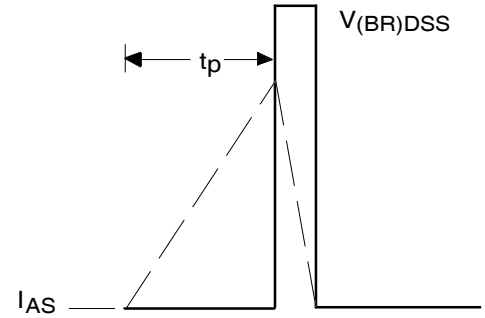


**Fig 22b.** Unclamped Inductive Waveforms

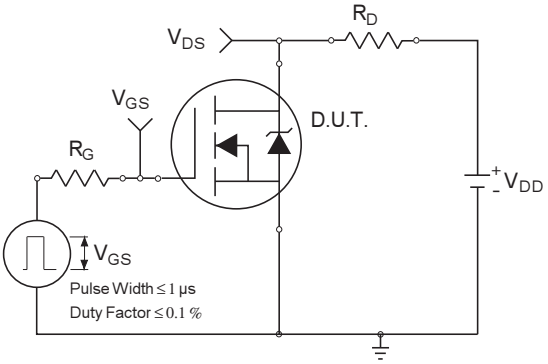


**Fig 23a.** Switching Time Test Circuit

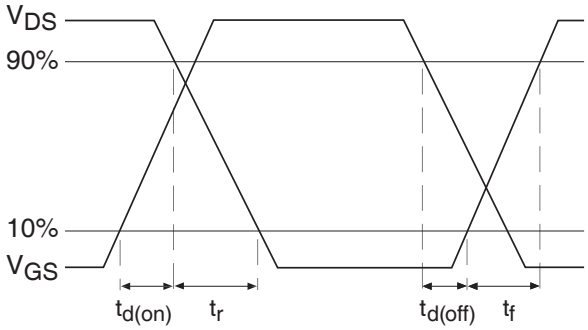


**Fig 23b.** Switching Time Waveforms

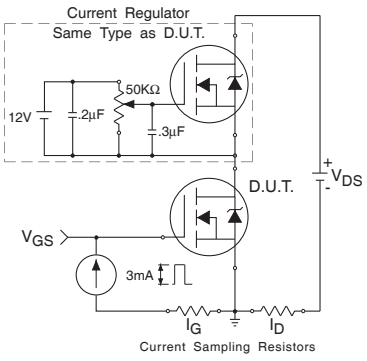


**Fig 24a.** Gate Charge Test Circuit

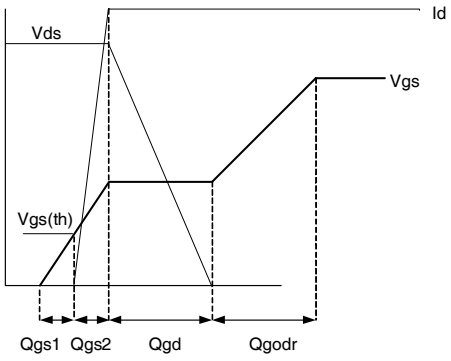


**Fig 24b.** Gate Charge Waveform

# D²Pak (TO-263AB) Package Outline

Dimensions are shown in millimeters (inches)

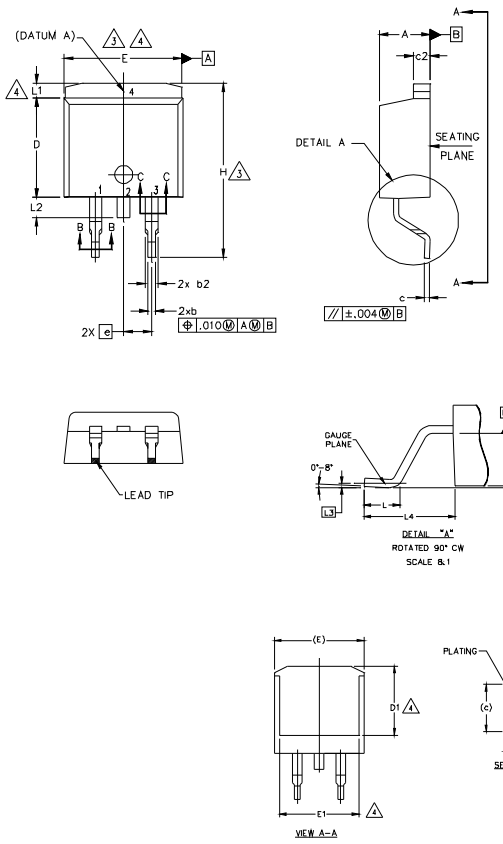


NOTES:

1. DIMENSIONING AND TOLERANCING PER ASME Y14.5M-1994
2. DIMENSIONS ARE SHOWN IN MILLIMETERS [INCHES].
3. DIMENSION D & E DO NOT INCLUDE MOLD FLASH. MOLD FLASH SHALL NOT EXCEED 0.127 [.005"] PER SIDE. THESE DIMENSIONS ARE MEASURED AT THE OUTMOST EXTREMES OF THE PLASTIC BODY AT DATUM H.
4. THERMAL PAD CONTOUR OPTIONAL WITHIN DIMENSION E, L1, D1 & E1.
5. DIMENSION b1 AND c1 APPLY TO BASE METAL ONLY.
6. DATUM A & B TO BE DETERMINED AT DATUM PLANE H.
7. CONTROLLING DIMENSION: INCH.
8. OUTLINE CONFORMS TO JEDEC OUTLINE TO-263AB.

| SYMBOL | DIMENSIONS | | | | NOTES |
|---|---|---|---|---|---|
| | MILLIMETERS | | INCHES | | |
| | MIN. | MAX. | MIN. | MAX. | |
| A | 4.06 | 4.83 | .160 | .190 | |
| A1 | 0.00 | 0.254 | .000 | .010 | |
| b | 0.51 | 0.99 | .020 | .039 | |
| b1 | 0.51 | 0.89 | .020 | .035 | 5 |
| b2 | 1.14 | 1.78 | .045 | .070 | |
| b3 | 1.14 | 1.73 | .045 | .068 | 5 |
| c | 0.38 | 0.74 | .015 | .029 | |
| c1 | 0.38 | 0.58 | .015 | .023 | 5 |
| c2 | 1.14 | 1.65 | .045 | .065 | |
| D | 8.38 | 9.65 | .330 | .380 | 3 |
| D1 | 6.86 | – | .270 | | 4 |
| E | 9.65 | 10.67 | .380 | .420 | 3,4 |
| E1 | 6.22 | – | .245 | | 4 |
| e | 2.54 BSC | | .100 BSC | | |
| H | 14.61 | 15.88 | .575 | .625 | |
| L | 1.78 | 2.79 | .070 | .110 | |
| L1 | – | 1.65 | – | .066 | 4 |
| L2 | 1.27 | 1.78 | – | .070 | |
| L3 | 0.25 BSC | | .010 BSC | | |
| L4 | 4.78 | 5.28 | .188 | .208 | |

LEAD ASSIGNMENTS

HEXFET

1.– GATE
2, 4.– DRAIN
3.– SOURCE

IGBTs, CoPACK

1.– GATE
2, 4.– COLLECTOR
3.– EMITTER

DIODES

1.– ANODE *
2, 4.– CATHODE
3.– ANODE

* PART DEPENDENT.

# D²Pak Part Marking Information

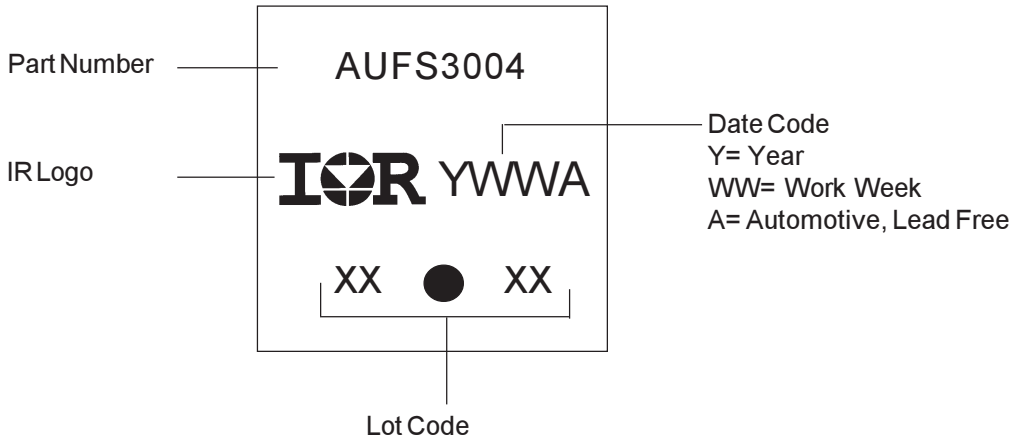


**Note: For the most current drawing please refer to IR website at http://www.irf.com/package/**

## TO-262 Package Outline

Dimensions are shown in millimeters (inches)

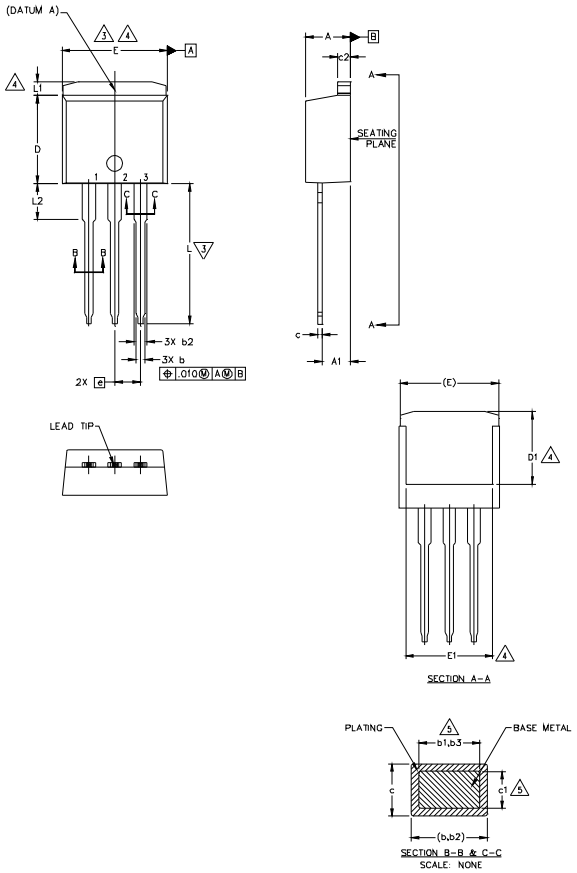


NOTES:

1. DIMENSIONING AND TOLERANCING PER ASME Y14.5M-1994
2. DIMENSIONS ARE SHOWN IN MILLIMETERS [INCHES].
3. DIMENSION D & E DO NOT INCLUDE MOLD FLASH. MOLD FLASH SHALL NOT EXCEED 0.127 [.005"] PER SIDE. THESE DIMENSIONS ARE MEASURED AT THE OUTMOST EXTREMES OF THE PLASTIC BODY.
4. THERMAL PAD CONTOUR OPTIONAL WITHIN DIMENSION E, L1, D1 & E1.
5. DIMENSION b1 AND c1 APPLY TO BASE METAL ONLY.
6. CONTROLLING DIMENSION: INCH.
7. - OUTLINE CONFORM TO JEDEC TO-262 EXCEPT A1(max.), b(min.) AND D1(min.) WHERE DIMENSIONS DERIVED THE ACTUAL PACKAGE OUTLINE.

| SYMBOL | DIMENSIONS | | | | NOTES |
|---|---|---|---|---|---|
| | MILLIMETERS | | INCHES | | |
| | MIN. | MAX. | MIN. | MAX. | |
| A | 4.06 | 4.83 | .160 | .190 | |
| A1 | 2.03 | 3.02 | .080 | .119 | |
| b | 0.51 | 0.99 | .020 | .039 | |
| b1 | 0.51 | 0.89 | .020 | .035 | 5 |
| b2 | 1.14 | 1.78 | .045 | .070 | |
| b3 | 1.14 | 1.73 | .045 | .068 | 5 |
| c | 0.38 | 0.74 | .015 | .029 | |
| c1 | 0.38 | 0.58 | .015 | .023 | 5 |
| c2 | 1.14 | 1.65 | .045 | .065 | |
| D | 8.38 | 9.65 | .330 | .380 | 3 |
| D1 | 6.86 | – | .270 | – | 4 |
| E | 9.65 | 10.67 | .380 | .420 | 3,4 |
| E1 | 6.22 | – | .245 | | 4 |
| e | 2.54 BSC | | .100 BSC | | |
| L | 13.46 | 14.10 | .530 | .555 | |
| L1 | – | 1.65 | – | .065 | 4 |
| L2 | 3.56 | 3.71 | .140 | .146 | |

LEAD ASSIGNMENTS

HEXFET

1.- GATE
2.- DRAIN
3.- SOURCE
4.- DRAIN

IGBTs, CoPACK

1.- GATE
2.- COLLECTOR
3.- EMITTER
4.- COLLECTOR

## TO-262 Part Marking Information

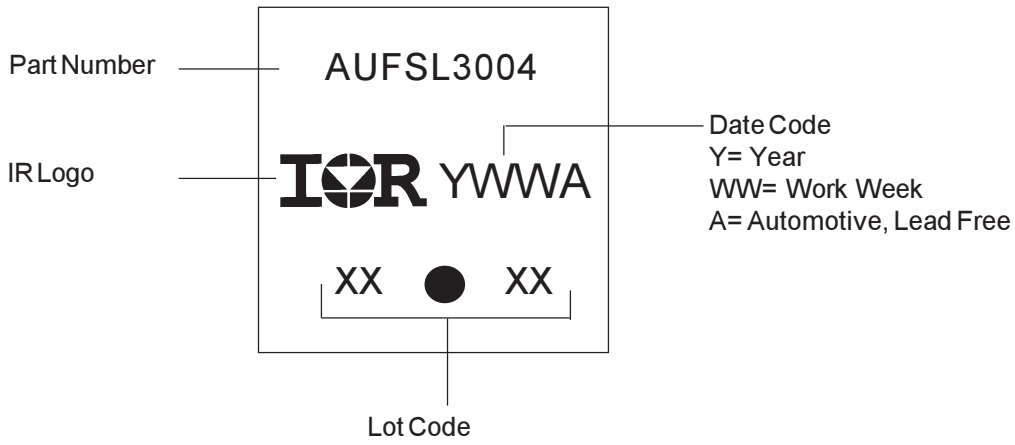


**Note: For the most current drawing please refer to IR website at http://www.irf.com/package/**

# D²Pak (TO-263AB) Tape & Reel Information

Dimensions are shown in millimeters (inches)

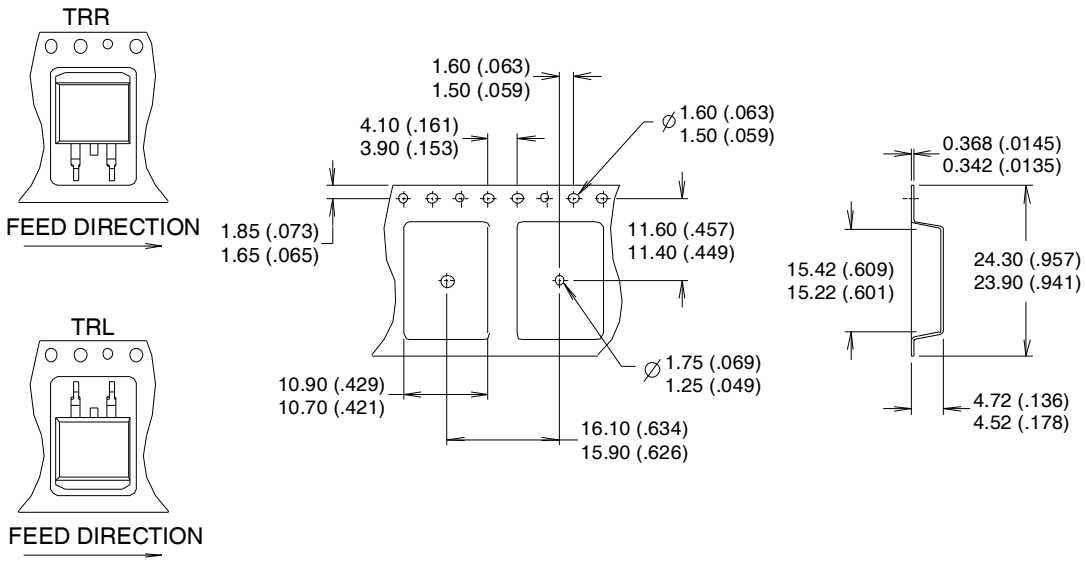


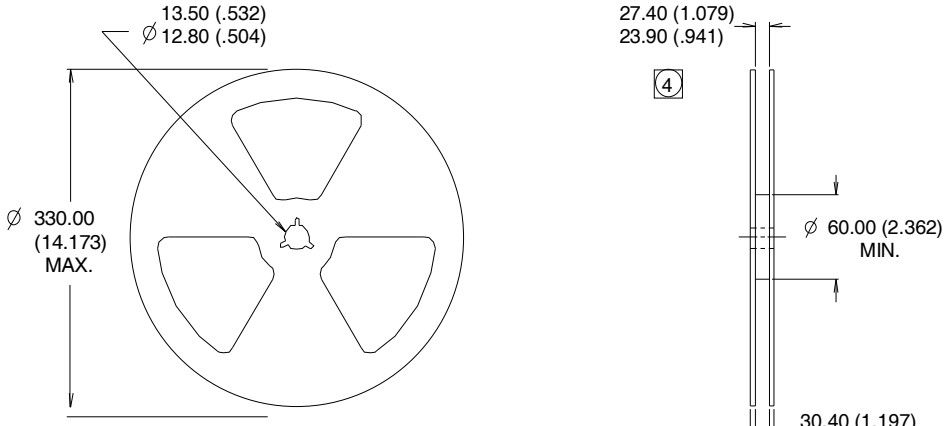


NOTES :
1. COMFORMS TO EIA-418.
2. CONTROLLING DIMENSION: MILLIMETER.
3. DIMENSION MEASURED @ HUB.
4. INCLUDES FLANGE DISTORTION @ OUTER EDGE.

## Ordering Information

| Base part | Package Type | Standard Pack | | Complete Part Number |
|---|---|---|---|---|
| | | Form | Quantity | |
| AUIRFSL3004 | TO-262 | Tube | 50 | AUIRFSL3004 |
| AUIRFS3004 | D2Pak | Tube | 50 | AUIRFS3004 |
| | | Tape and Reel Left | 800 | AUIRFS3004TRL |
| | | Tape and Reel Right | 800 | AUIRFS3004TRR |

## IMPORTANT NOTICE

Unless specifically designated for the automotive market, International Rectifier Corporation and its subsidiaries (IR) reserve the right to make corrections, modifications, enhancements, improvements, and other changes to its products and services at any time and to discontinue any product or services without notice. Part numbers designated with the “AU” prefix follow automotive industry and / or customer specific requirements with regards to product discontinuance and process change notification. All products are sold subject to IR’s terms and conditions of sale supplied at the time of order acknowledgment.

IR warrants performance of its hardware products to the specifications applicable at the time of sale in accordance with IR’s standard warranty. Testing and other quality control techniques are used to the extent IR deems necessary to support this warranty. Except where mandated by government requirements, testing of all parameters of each product is not necessarily performed.

IR assumes no liability for applications assistance or customer product design. Customers are responsible for their products and applications using IR components. To minimize the risks with customer products and applications, customers should provide adequate design and operating safeguards.

Reproduction of IR information in IR data books or data sheets is permissible only if reproduction is without alteration and is accompanied by all associated warranties, conditions, limitations, and notices. Reproduction of this information with alterations is an unfair and deceptive business practice. IR is not responsible or liable for such altered documentation. Information of third parties may be subject to additional restrictions.

Resale of IR products or serviced with statements different from or beyond the parameters stated by IR for that product or service voids all express and any implied warranties for the associated IR product or service and is an unfair and deceptive business practice. IR is not responsible or liable for any such statements.

IR products are not designed, intended, or authorized for use as components in systems intended for surgical implant into the body, or in other applications intended to support or sustain life, or in any other application in which the failure of the IR product could create a situation where personal injury or death may occur. Should Buyer purchase or use IR products for any such unintended or unauthorized application, Buyer shall indemnify and hold International Rectifier and its officers, employees, subsidiaries, affiliates, and distributors harmless against all claims, costs, damages, and expenses, and reasonable attorney fees arising out of, directly or indirectly, any claim of personal injury or death associated with such unintended or unauthorized use, even if such claim alleges that IR was negligent regarding the design or manufacture of the product.

Only products certified as military grade by the Defense Logistics Agency (DLA) of the US Department of Defense, are designed and manufactured to meet DLA military specifications required by certain military, aerospace or other applications. Buyers acknowledge and agree that any use of IR products not certified by DLA as military-grade, in applications requiring military grade products, is solely at the Buyer’s own risk and that they are solely responsible for compliance with all legal and regulatory requirements in connection with such use.

IR products are neither designed nor intended for use in automotive applications or environments unless the specific IR products are designated by IR as compliant with ISO/TS 16949 requirements and bear a part number including the designation “AU”. Buyers acknowledge and agree that, if they use any non-designated products in automotive applications, IR will not be responsible for any failure to meet such requirements.

For technical support, please contact IR’s Technical Assistance Center

http://www.irf.com/technical-info/

**WORLD HEADQUARTERS:**

101 N. Sepulveda Blvd., El Segundo, California 90245

Tel: (310) 252-7105