## Description

The AU1501P1 is an uni-directional TVS diode, utilizing leading monolithic silicon technology to provide fast response time and low ESD clamping voltage, making this device an ideal solution for protecting voltage sensitive data and power line. The AU1501P1 complies with the IEC 61000-4-2 (ESD) with ±30kV air and ±30kV contact discharge. It is assembled into an ultra-small 1.0x0.6x0.5mm lead-free DFN package. The small size and high ESD surge protection make AU1501P1 an ideal choice to protect cell phone, digital cameras, audio players and many other portable applications.

## Features

- Ultra small package: 1.0x0.6x0.5mm
- Protects one data or power line
- Ultra low leakage: nA level
- Operating voltage: 15V
- Low clamping voltage
- 2-pin leadless package
- Complies with following standards:
  - IEC 61000-4-2 (ESD) immunity test
    - Air discharge: ±30kV
    - Contact discharge: ±30kV
  - IEC61000-4-5 (Lightning) 10A (8/20μs)
- RoHS Compliant

## Mechanical Characteristics

- Package: DFN1006-2 (1.0×0.6×0.5mm)
- Case Material: “Green” Molding Compound.
- Moisture Sensitivity: Level 3 per J-STD-020
- Terminal Connections: See Diagram Below
- Marking Information: See Below

## Applications

- Cellular Handsets and Accessories
- Personal Digital Assistants
- Notebooks and Handhelds
- Portable Instrumentation
- Power Supply
- Keypads, Side Keys, LCD Displays

## Marking Information

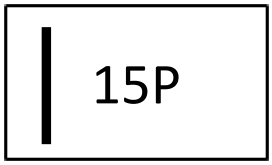


15P: Device Marking Code
Bar denotes cathode

## Dimensions and Pin Configuration

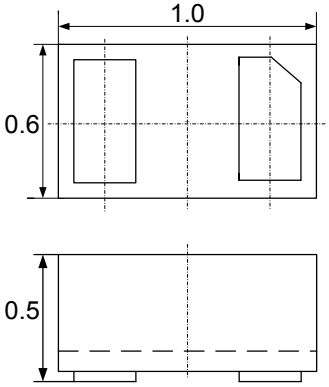


Package Dimensions

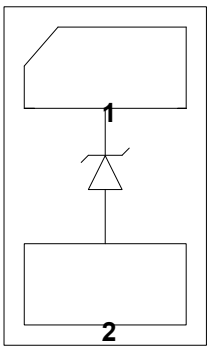


Circuit and Pin Schematic

## Ordering Information

| Part Number | Packaging | Reel Size |
|---|---|---|
| AU1501P1 | 10000/Tape & Reel | 7 inch |



Download from alldatasheet.com

## Absolute Maximum Ratings ($T_A$=25°C unless otherwise specified)

| Parameter | Symbol | Value | Unit |
|---|---|---|---|
| Peak Pulse Power (8/20μs) | Ppk | 320 | W |
| Peak Pulse Current (8/20μs) | Ipp | 10 | A |
| ESD per IEC 61000−4−2 (Air)<br>ESD per IEC 61000−4−2 (Contact) | $V_{ESD}$ | ±30<br>±30 | kV |
| Operating Temperature Range | $T_J$ | −55 to +125 | °C |
| Storage Temperature Range | Tstg | −55 to +150 | °C |

## Electrical Characteristics ($T_A$=25°C unless otherwise specified)

| Parameter | Symbol | Min | Typ | Max | Unit | Test Condition |
|---|---|---|---|---|---|---|
| Reverse Working Voltage | $V_{RWM}$ | | | 15 | V | Pin 1 to Pin 2 |
| Breakdown Voltage | $V_{BR}$ | 16.5 | | | V | IT = 1mA, Pin 1 to Pin 2 |
| Reverse Leakage Current | $I_R$ | | | 0.2 | μA | VRWM = 15V, Pin 1 to Pin 2 |
| Forward Voltage | $V_F$ | | | 1.2 | V | IF = 10mA, Pin 2 to Pin 1 |
| Clamping Voltage | $V_C$ | | | 21 | V | IPP = 1A (8 x 20μs pulse), Pin 1 to Pin 2 |
| Clamping Voltage | $V_C$ | | | 32 | V | IPP = 10A (8 x 20μs pulse), Pin 1 to Pin 2 |
| Junction Capacitance | $C_J$ | | 50 | | pF | VR = 0V, f = 1MHz |



Download from alldatasheet.com

## Typical Performance Characteristics ($T_A$=25°C unless otherwise Specified)

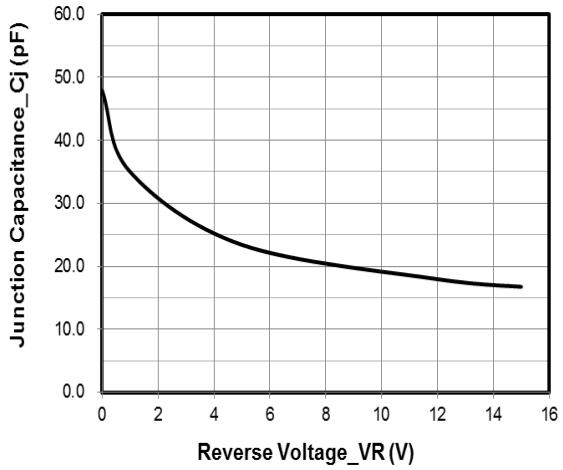


**Junction Capacitance vs. Reverse Voltage**

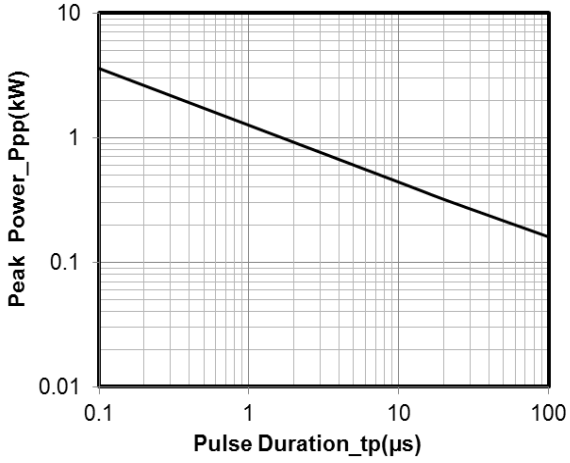


**Peak Pulse Power vs. Pulse Time**

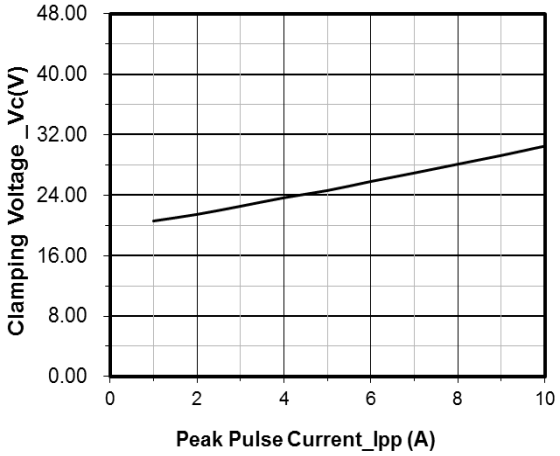


**Clamping Voltage vs. Peak Pulse Current**

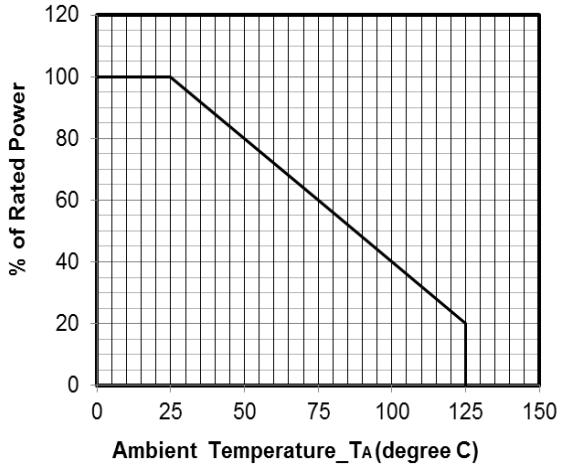


**Power Derating Curve**

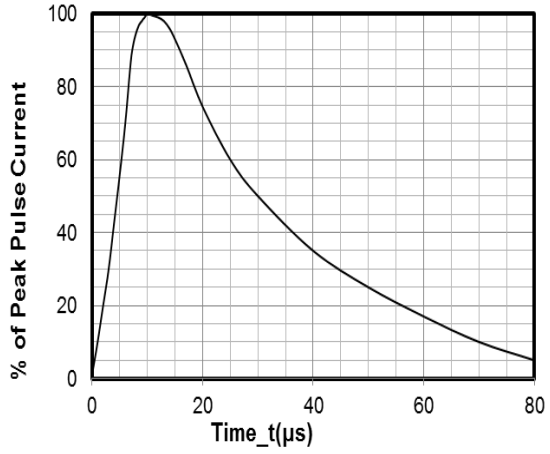


**8 X 20μs Pulse Waveform**

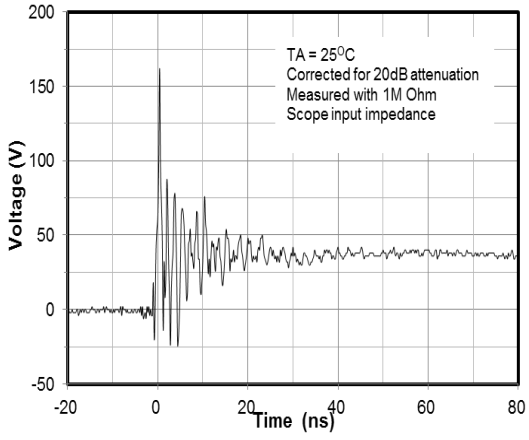


**ESD Clamping Voltage**

**8 kV Contact per IEC61000−4−2**



Download from alldatasheet.com

## DFN1006-2 Package Outline Drawing

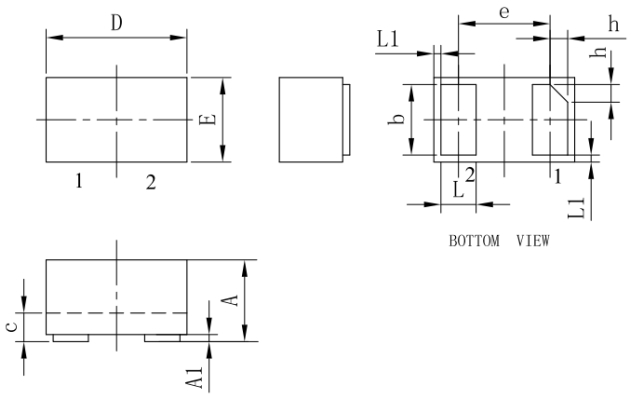


| SYM | DIMENSIONS | | | | | |
|---|---|---|---|---|---|---|
| | MILLIMETERS | | | INCHES | | |
| | MIN | NOM | MAX | MIN | NOM | MAX |
| A | 0.45 | 0.50 | 0.55 | 0.018 | 0.020 | 0.022 |
| A1 | 0.00 | 0.02 | 0.05 | 0.000 | 0.001 | 0.002 |
| b | 0.45 | 0.50 | 0.55 | 0.018 | 0.020 | 0.022 |
| c | 0.12 | 0.15 | 0.18 | 0.005 | 0.006 | 0.007 |
| D | 0.95 | 1.00 | 1.05 | 0.037 | 0.039 | 0.041 |
| e | 0.65 BSC | | | 0.026 BSC | | |
| E | 0.55 | 0.60 | 0.65 | 0.022 | 0.024 | 0.026 |
| L | 0.20 | 0.25 | 0.30 | 0.008 | 0.010 | 0.012 |
| L1 | 0.05REF | | | 0.002REF | | |
| h | 0.07 | 0.12 | 0.17 | 0.003 | 0.005 | 0.007 |

## Suggested Land Pattern

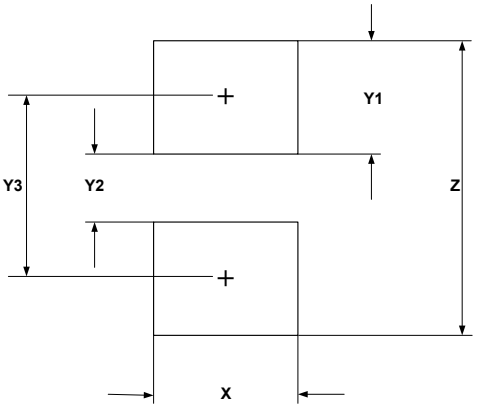


| SYM | DIMENSIONS | |
|---|---|---|
| | MILLIMETERS | INCHES |
| X | 0.60 | 0.024 |
| Y1 | 0.50 | 0.020 |
| Y2 | 0.30 | 0.012 |
| Y3 | 0.80 | 0.032 |
| Z | 1.30 | 0.052 |

## Contact Information

Applied Power Microelectronics Co., Ltd.

Website: http://www.appliedpowermicro.com

Email: sales@appliedpowermicro.com

Phone: +86 (0519) 8399 3606

Applied Power Microelectronics Co., Ltd. (APM) reserves the right to make changes to the product specification and data in this document without notice. APM makes no warranty, representation or guarantee regarding the suitability of its products for any particular purpose, nor does APM assume any liability arising from the application or use of any products or circuits, and specifically disclaims any and all liability, including without limitation special, consequential or incidental damages.



Download from alldatasheet.com