ZigBit™ 700/800/900 MHz Wireless Modules

ATZB-900-B0

Datasheet



8227C–MCU Wireless–06/09

Section 1

1.1 Summary 1-1
1.2 Applications 1-1
1.3 Key Features 1-2
1.4 Benefits 1-2
1.5 Abbreviations and Acronyms 1-2
1.6 Related Documents 1-3

Section 2

2.1 Overview 2-1

Section 3

3.1 Electrical Characteristics 3-3
3.1.1 Absolute Maximum Ratings 3-3
3.1.2 Test Conditions 3-3
3.1.3 RF Characteristics 3-4
3.1.4 ATmega1281V Microcontroller Characteristics 3-4
3.1.5 Module Interfaces characteristics 3-5
3.2 Physical/Environmental Characteristics and Outline 3-5
3.3 Pin Configuration 3-6
3.4 Mounting Information 3-9
3.5 Soldering Profile 3-10
3.6 Antenna Reference Design 3-10
3.6.1 General recommendations 3-11

Section 4

4.1 Ordering Information 4-12

Section 1

Introduction

1.1 Summary

ZigBit™ 900 is an ultra-compact, extended range, low-power, high-sensitivity 784/868/915 MHz IEEE 802.15.4/ZigBee® OEM module, based on the innovative Atmel's mixed-signal hardware platform. It is designed for wireless sensing, control and data acquisition applications. ZigBit modules eliminate the need for costly and time-consuming RF development, and shortens time to market for a wide range of wireless applications.

This module is the latest addition to the ZigBit family also represented by 2.4 GHz modules ATZB-24-A2/B0 [1], and ATZB-A24-UFL/U0 [3].

1.2 Applications

ZigBit 900 module is compatible with robust IEEE 802.15.4/ZigBee stack that supports a self-healing, self-organizing mesh network, while optimizing network traffic and minimizing power consumption. Atmel offers two stack configurations: BitCloud and SerialNet. BitCloud is a ZigBee PRO certified software development platform supporting reliable, scalable, and secure wireless applications running on Atmel's ZigBit modules. SerialNet allows programming of the module via serial AT-command interface.

The applications include, but are not limited to:

- **Building automation & monitoring**
  - **Lighting controls**
  - **Wireless smoke and CO detectors**
  - **Structural integrity monitoring**
- **HVAC monitoring & control**
- **Inventory management**
- **Environmental monitoring**
- **Security**
- **Water metering**
- **Industrial monitoring**
  - **Machinery condition and performance monitoring**
  - **Monitoring of plant system parameters such as temperature, pressure, flow, tank level, humidity, vibration, etc.**
- **Automated meter reading (AMR)**

1.3 Key Features

- **Ultra compact size (18.8 x 13.5 mm)**
- **High RX sensitivity (-110 dBm)**
- **Outperforming link budget (120 dB)**
- **Up to 11 dBm output power**
- **Very low power consumption (< 6 µA in Sleep mode)**
- **Ample memory resources (128K bytes of flash memory, 8K bytes RAM, 4K bytes EEPROM)**
- **Wide range of interfaces (both analog and digital):**
  - **9 spare GPIO, 2 spare IRQ lines**
  - **4 ADC lines + 1 line for supply voltage control (up to 9 lines with JTAG disabled)**
  - **UART with CTS/RTS control**
  - **USART**
  - **I^2C**
  - **SPI**
  - **1-Wire**
  - **Up to 30 lines configurable as GPIO**
- **Capability to write own MAC address into the EEPROM**
- **Optional antenna reference designs**
- **IEEE 802.15.4 compliant transceiver**
- **868 / 915 MHz band**
- **784 MHz Chinese band**
- **BitCloud embedded software, including serial bootloader and AT command set**

1.4 Benefits

- **Over 6 km (4 miles) outdoor line-of-sight range**
- **Small physical footprint and low profile for optimum fit in even the smallest of devices**(1)
- **Extended battery life**
- **Mesh networking capability**
- **Easy-to-use low cost Evaluation Kit**
- **Single source of support for HW and SW**

Note: 1. The module is to be certified

1.5 Abbreviations and Acronyms

ADC	Analog-to -Digital Converter
API	Application Programming Interface
BPSK	Binary Phase-Shift Keying modulation scheme
DC	Direct Current
DTR	Data Terminal Ready
EEPROM	Electrically Erasable Programmable Read-Only Memory
ESD	Electrostatic Discharge

GPIO	General Purpose Input/Output
HVAC	Heating, Ventilating and Air Conditioning
HW	Hardware
I^2C	Inter-Integrated Circuit
IEEE	Institute of Electrical and Electronics Engineers
IRQ	Interrupt Request
ISM	Industrial, Scientific and Medical radio band
JTAG	Digital interface for debugging of embedded device, also known as IEEE 1149.1 standard interface
MAC	Medium Access Control layer
MCU	Microcontroller Unit. In this document it also means the processor, which is the core of ZigBit module
O-QPSK	Offset Quadrature Phase-Shift Keying modulation scheme
OEM	Original Equipment Manufacturer
OTA	Over-The-Air upgrade
PCB	Printed Circuit Board
PER	Package Error Ratio
RAM	Random Access Memory
RF	Radio Frequency
RTS/CTS	Request to Send/ Clear to Send
RX	Receiver
SMA	Surface Mount Assembly
SPI	Serial Peripheral Interface
SW	Software
TTM	Time To Market
TX	Transmitter
UART	Universal Asynchronous Receiver/Transmitter
USART	Universal Synchronous/Asynchronous Receiver/Transmitter
USB	Universal Serial Bus
ZDK	ZigBit Development Kit
ZigBee, ZigBee PRO	Wireless networking standards targeted at low-power applications
802.15.4	The IEEE 802.15.4-2006 standard applicable to low-rate wireless Personal Area Network

1.6 Related Documents

[1] ZigBit™ 2.4 GHz Wireless Modules ATZB-24-A2/B0 Datasheet. Atmel's doc8226.pdf

[2] ZigBit™ Development Kit. User Guide. MeshNetics Doc. S-ZDK-451 - TBD

[3] ZigBit™ Amplified 2.4 GHz Wireless Modules datasheet. Atmel's doc8228.pdf

[4] Atmel 8-bit AVR Microcontroller with 64K/128K/256K Bytes In-System Programmable Flash. 2549F AVR 04/06

[5] Atmel AT86RF212 Low Power 800/900 MHz Transceiver for IEEE 802.15.4b, Zigbee, and ISM Applications. Preliminary specification

[6] Ultra Small Surface Mount Coaxial Connectors - Low Profile 1.9mm or 2.4mm Mated Height. http://www.hirose.co.jp/cataloge_hp/e32119372.pdf

[7] ZigBit 900 Development Kit. User's Guide. MeshNetics Doc. S-ZDK-451~03 TBD

[8] IEEE Std 802.15.4-2006 IEEE Standard for Information technology - Part 15.4 Wireless Medium Access Control (MAC) and Physical Layer (PHY) Specifications for Low-Rate Wireless Personal Area Networks (LR-WPANs)

[9] ZigBee Specification. ZigBee Document 053474r17, October 19, 2007

[10] BitCloud™ IEEE 802.15.4/ZigBee Software. AVR2050: BitCloud User Guide. Atmel’s doc8199.pdf

Section 2

Zigbit™ 700/800/900 MHz Wireless Modules Overview

2.1 Overview

ZigBit 900 is an extended-range low-power, a low-power, high-sensitivity IEEE 802.15.4/ ZigBee-compliant OEM module, which occupies less than a square inch. Based on a solid combination of Atmel's latest MCU Wireless hardware platform [5], power amplifier and low-noise amplifier, the ZigBit 900 offers superior radio performance, ultra-low power consumption and exceptional ease of integration.

Figure 2-1. ATZB-900-B0 Block Diagram

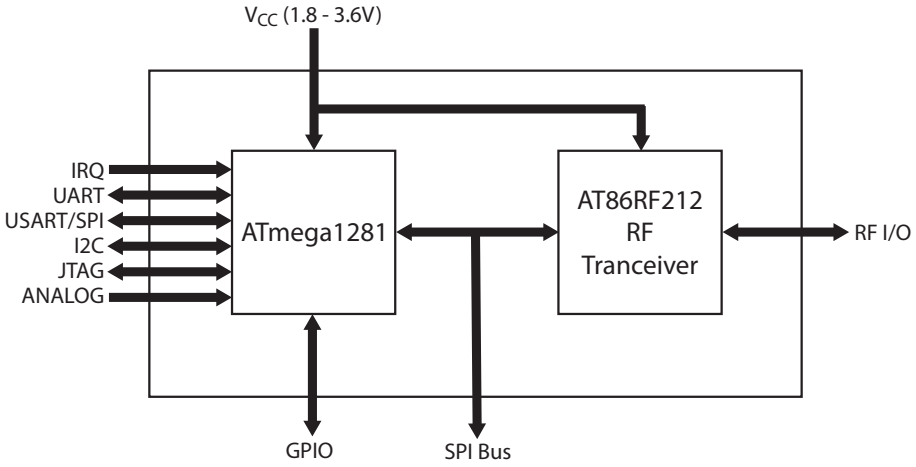

ZigBit 900 contains Atmel's ATmega1281V Microcontroller [4] and AT86RF212 RF Transceiver [5]. The module features 128 Kbytes flash memory and 8 Kbytes RAM.

The ZigBit 900 already contains a complete RF/MCU-related design with all the necessary passive components included. The module can be easily mounted on a simple 2-layer PCB with a minimum of required external connection. Compared to a custom RF/MCU design, a module-based solution offers considerable savings in development time and NRE cost per unit during the design, prototyping, and mass production phases of product development.

To jumpstart evaluation and development, Atmel also offers a complete set of evaluation and development tools. The new ZigBit 900 Development Kit [7] comes with everything you need to create custom applications featuring ZigBit 900 module.

The kit features MeshBean development boards (ATZB-EVB-900-SMA) with an easy-to-access extension connector for attaching third party sensors and other peripherals, and a JTAG connector for easy application uploading and debugging.

The kit also includes reference applications to speed up application development, source code for hardware interface layer and reference drivers for the all the module interfaces, intuitive development environment from Atmel, and comprehensive set of application notes and product documentation.

ZigBit 900 modules come bundled with BitCloud, a 2nd generation embedded software stack from Atmel. BitCloud is fully compliant with ZigBee PRO and ZigBee standards for wireless sensing and control [8], [9], [10] and it provides an augmented set of APIs which, while maintaining 100% compliance with the standard, offer extended functionality designed with developer's convenience and ease-of-use in mind.

Depending on end-user design requirements, ZigBit 900 can operate as a self-contained sensor node, where it would function as a single MCU, or it can be paired with a host processor driving the module over a serial interface. In the former case, a user application may be used with the BitCloud software allowing customization of embedded applications through BitCloud's C API.

In the latter case, the host processor controls data transmission and manages module peripherals via an extensive set of SerialNet AT commands. Thus, no firmware customization is required for a successful module design-in. Additionally, third-party sensors can be connected directly to the module, thus expanding the existing set of peripheral interfaces.

Section 3

Specifications

3.1 Electrical Characteristics

3.1.1 Absolute Maximum Ratings

Table 3-1. Absolute Maximum Ratings[1][2]

Parameters	Min	Max
Voltage on any pin, except RESET with respect to Ground	-0.5V	V_{CC} + 0.5V
DC Current per I/O Pin		40 mA
DC Current DVCC and DGND pins		300 mA
Input RF Level		+5 dBm

Notes:
1. **Absolute Maximum Ratings** are the values beyond which damage to the device may occur. Under no circumstances must the absolute maximum ratings given in this table be violated. Stresses beyond those listed under "Absolute Maximum Ratings" may cause permanent damage to the device.

   This is a stress rating only. Functional operation of the device at these or other conditions, beyond those indicated in the operational sections of this specification, is not implied. Exposure to absolute maximum rating conditions for extended periods may affect device reliability.

2. **Attention!** ZigBit 900 is an ESD-sensitive device. Precaution should be taken when handling the device in order to prevent permanent damage.

3.1.2 Test Conditions

Table 3-2. Test conditions (unless otherwise stated), V_{CC} = 3V, T_{amb} = 25°C

Parameters	Condition	Range	Unit
Supply Voltage, V_{CC}		1.8 to 3.6	V
Current Consumption: RX mode[1]		15	mA
Current Consumption: TX mode[1]	PTX = 5 dBm	20	mA
Current Consumption: Power-save mode[1]		6	µA

Note: 1. Preliminary data

Current consumption actually depends on multiple factors, including but not limited to, the board design and materials, BitCloud settings, network activity, EEPROM read/write operations. It also depends on MCU load and/or peripherals used by an application.

3.1.3 RF Characteristics

Table 3-3. RF Characteristics

Parameters	Condition	Range	Unit
Frequency Band		779 to 787 868 to 868.6 902 to 928	MHz
Number of Channels		15	
Channel Spacing		2	MHz
Transmitter Output Power		-11 to +11	dBm
Receiver Sensitivity	AWGN channel, PER = 1%		
20 kbit/s(2)	PSDU length of 20 octets	-110	dBm
40 kbit/s(2)		-108	
100 kbit/s(2)		-101	
250 kbit/s(2)		-100	
200 kbit/s	PSDU length of 127 octets	-97	
400 kbit/s		-90	
500 kbit/s		-97	
1000 kbit/s		-92	
On-Air Data Rate	BPSK modulation	20 (at 868 MHz), 40 (at 915 MHz)	kbps
	O-QPSK modulation	100 (at 868 MHz) 250 (at 915 MHz and 784 MHz)	
TX Output/ RX Input Nominal Impedance	For balanced output	100	Ω
Range, outdoors(1)	For balanced output	6	km

Notes: 1. Preliminary data
2. IEEE 802.15.4-2006 compliant

3.1.4 ATmega1281V Microcontroller Characteristics

Table 3-4. ATmega1281V Characteristics

Parameters	Condition	Range	Unit
On-chip Flash Memory size		128	Kbytes
On-chip RAM size		8	Kbytes
On-chip EEPROM size		4	Kbytes
Operation Frequency		4	MHz

3.1.5 Module Interfaces characteristics

Table 3-5. Module Interfaces characteristics

Parameters	Condition	Range	Unit
UART Maximum Baud Rate		38.4	kbps
ADC Resolution/ Conversion Time	In the single conversion mode	10/200	Bits/µs
ADC Input Resistance		>1	MΩ
ADC Reference Voltage (VREF)		1.0 to V_{CC} - 3	V
ADC Input Voltage		0 - VREF	V
I^2C Maximum Clock		222	kHz
GPIO Output Voltage (High/Low)	-10/ 5 mA, V_{CC}=3V	2.3/ 0.5	V
Real Time Oscillator Frequency		32.768	kHz

3.2 Physical/Environmental Characteristics and Outline

Parameters	Value	Comments
Size	18.8 x 13.5 x 2.0 mm	ATZB-900-B0
Operating Temperature Range	-20°C to +70°C	-40°C to +85°C operational(1)
Operating Relative Humidity Range	no more than 80%	

Note: 1. Minor degration of clock stability may occur.

Figure 3-1. ATZB-900-B0 Mechanical drawing

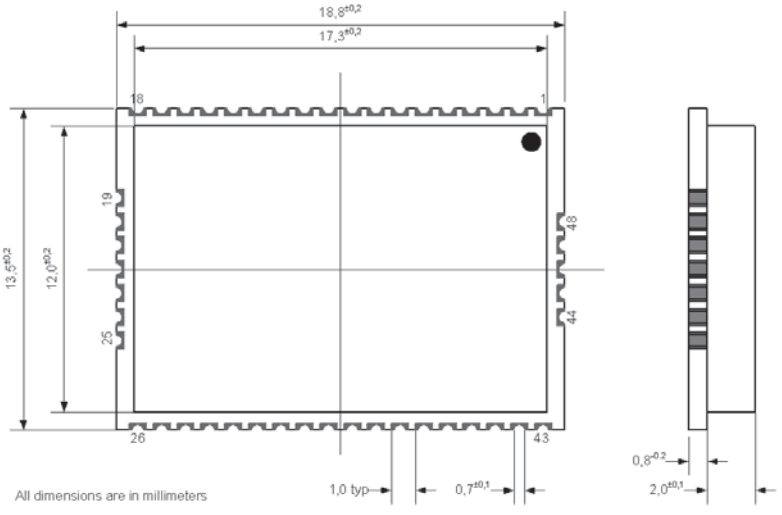

3.3 Pin Configuration

Figure 3-2. ATZB-900-B0 Pinout

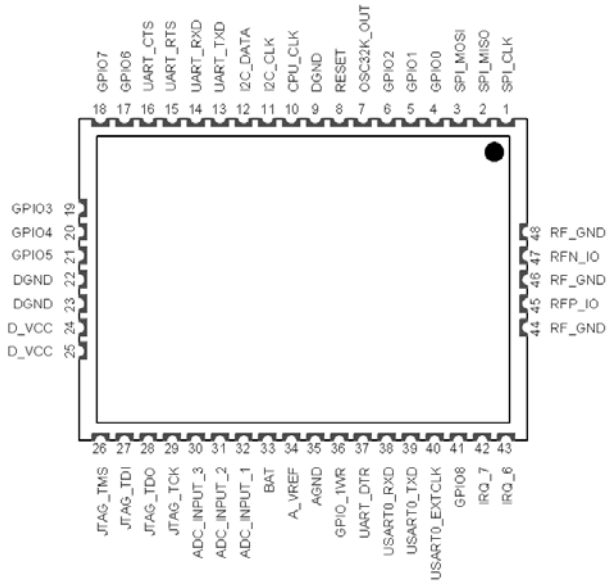

Table 3-6. Pin descriptions

Connector Pin	Pin Name	Description	I/O	Default State after Power on
1	SPI_CLK	Reserved for stack operation[4]	O	
2	SPI_MISO	Reserved for stack operation[4]	I/O	
3	SPI_MOSI	Reserved for stack operation[4]	I/O	
4	GPIO0	General Purpose digital Input/Output 0[2][3][4][7]	I/O	tri-state
5	GPIO1	General Purpose digital Input/Output 1[2][3][4][7]	I/O	tri-state
6	GPIO2	General Purpose digital Input/Output 2[2][3][4][7]	I/O	tri-state
7	OSC32K_OUT	32.768 kHz clock output[4][5]	O	
8	RESET	Reset input (active low)[4]		
9,22,23	DGND	Digital Ground		
10	CPU_CLK	RF clock output. When module is in active state, 4 MHz signal is present on this line. While module is in the sleeping state, clock generation is also stopped[4].	O	
11	I2C_CLK	I^2C serial clock output[2][3][4][7]	O	tri-state
12	I2C_DATA	I^2C serial clock input/output[2][3][4][7]	I/O	tri-state
13	UART_TXD	UART transmit output[1][2][3][4][7]	O	tri-state
14	UART_RXD	UART receive input[1][2][3][4][7]	I	tri-state
15	UART_RTS	RTS input (Request To send) for UART hardware flow control. Active low[2][3][4][7]	I	tri-state

Table 3-6. Pin descriptions (Continued)

Connector Pin	Pin Name	Description	I/O	Default State after Power on
16	UART_CTS	CTS output (Clear To send) for UART hardware flow control. Active low(2)(3)(4)(7)	O	tri-state
17	GPIO6	General Purpose digital Input/Output 6(2)(3)(4)(7)	I/O	tri-state
18	GPIO7	General Purpose digital Input/Output 7(2)(3)(4)(7)	I/O	tri-state
19	GPIO3	General Purpose digital Input/Output 3(2)(3)(4)(7)	I/O	tri-state
20	GPIO4	General Purpose digital Input/Output 4(2)(3)(4)(7)	I/O	tri-state
21	GPIO5	General Purpose digital Input/Output 5(2)(3)(4)(7)	I/O	tri-state
24,25	D_VCC	Digital Supply Voltage (V_{CC})(9)		
26	JTAG_TMS	JTAG Test Mode Select(2)(3)(4)(6)	I	
27	JTAG_TDI	JTAG Test Data Input(2)(3)(4)(6)	I	
28	JTAG_TDO	JTAG Test Data Output(2)(3)(4)(6)	O	
29	JTAG_TCK	JTAG Test Clock(2)(3)(4)(6)	I	
30	ADC_INPUT_3	ADC Input Channel 3(2)(3)(7)	I	tri-state
31	ADC_INPUT_2	ADC Input Channel 2(2)(3)(7)	I	tri-state
32	ADC_INPUT_1	ADC Input Channel 1(2)(3)(7)	I	tri-state
33	BAT	ADC Input Channel 0, used for battery level measurement. This pin equals $V_{CC}/3$.(2)(3)(7)	I	tri-state
34	A_VREF	Input/Output reference voltage for ADC	I/O	tri-state
35	AGND	Analog ground		
36	GPIO_1WR	1-wire interface(2)(3)(4)(7)	I/O	
37	UART_DTR	DTR input (Data Terminal Ready) for UART. Active low(2)(3)(4)(7)	I	tri-state
38	USART0_RXD	USART/SPI Receive pin(2)(3)(4)(7)	I	tri-state
39	USART0_TXD	USART /SPI Transmit pin(2)(3)(4)(7)	O	tri-state
40	USART0_EXTCLK	USART/SPI External Clock(2)(3)(4)(7)	I/O	tri-state
41	GPIO8	General Purpose Digital Input/Output 8(2)(3)(4)(7)	I/O	tri-state
42	IRQ_7	Digital Input Interrupt request 7(2)(3)(4)(7)	I	tri-state
43	IRQ_6	Digital Input Interrupt request 6(2)(3)(4)(7)	I	tri-state
44,46,48	RF GND	RF Analog Ground		
45	RFP_IO	Differential RF Input/Output	I/O	
47	RFN_IO	Differential RF Input/Output	I/O	

Notes:
1. The UART_TXD pin is intended for input (i.e. its designation as "TXD" implies some complex system containing ZigBit 900 as its RF terminal unit), while UART_RXD pin, vice versa, is for output.
2. Most of pins can be configured for general purpose I/O or for some alternate functions as described in details in the ATmega1281V Datasheet [1].
3. GPIO pins can be programmed either for output, or for input with/without pull-up resistors. Output pin drivers are strong enough to drive LED displays directly (refer to figures on pages 387-388, [1]).
4. All digital pins are provided with protection diodes to D_VCC and DGND

5. It is strongly recommended to avoid assigning an alternate function for OSC32K_OUT pin because it is used by BitCloud. However, this signal can be used if another peripheral or host processor requires 32.768 kHz clock, otherwise this pin can be disconnected.
6. Normally, JTAG_TMS, JTAG_TDI, JTAG_TDO, JTAG_TCK pins are used for on-chip debugging and flash burning. They can be used for A/D conversion if JTAGEN fuse is disabled.
7. The following pins can be configured with the BitCloud software to be general-purpose I/O lines: GPIO0, GPIO1, GPIO2, GPIO3, GPIO4, GPIO5, GPIO6, GPIO7, GPIO8, GPIO_1WR, I2C_CLK, I2C_DATA, UART_TXD, UART_RXD, UART_RTS, UART_CTS, ADC_INPUT_3, ADC_INPUT_2, ADC_INPUT_1, BAT, UART_DTR, USART0_RXD, USART0_TXD, USART0_EXTCLK, IRQ_7, IRQ_6. Additionally, four JTAG lines can be programmed with software as GPIO as well, but this requires changing the fuse bits and will disable JTAG debugging.
8. With BitCloud, CTS pin can be configured to indicate sleep/active condition of the module thus providing mechanism for power management of host processor. If this function is necessary, connection of this pin to external pull-down resistor is recommended to prevent the undesirable transients during module reset process.
9. Using ferrite bead and 1 µF capacitor located closely to the power supply pin is recommended, as shown below.

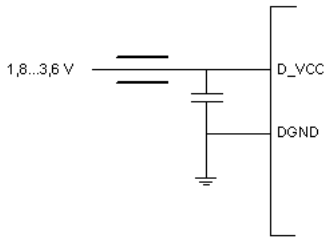

10. In SPI mode, USART0_EXTCLK is output. In USART mode, this pin can be configured as either input or output pin.

Figure 3-3. Typical Reference Schematic

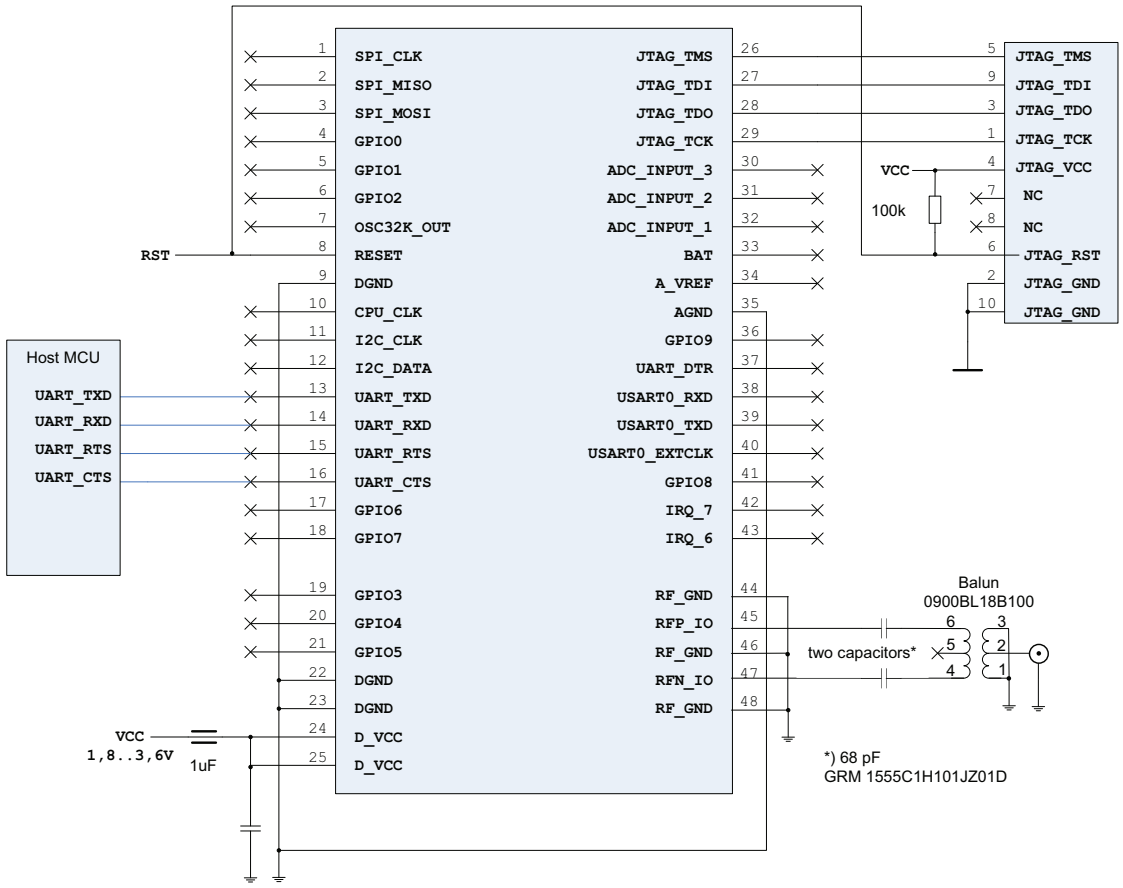

3.4 Mounting Information

The below diagrams show the PCB layout recommended for ZigBit 900 module. Neither via-holes nor wires are allowed on the PCB upper layer in area occupied by the module. As a critical requirement, RF_GND pins should be grounded via several holes to be located right next to the pins thus minimizing inductance and preventing both mismatch and losses.

Figure 3-4. ATZB-900-B0 PCB Recommended Layout, Top View

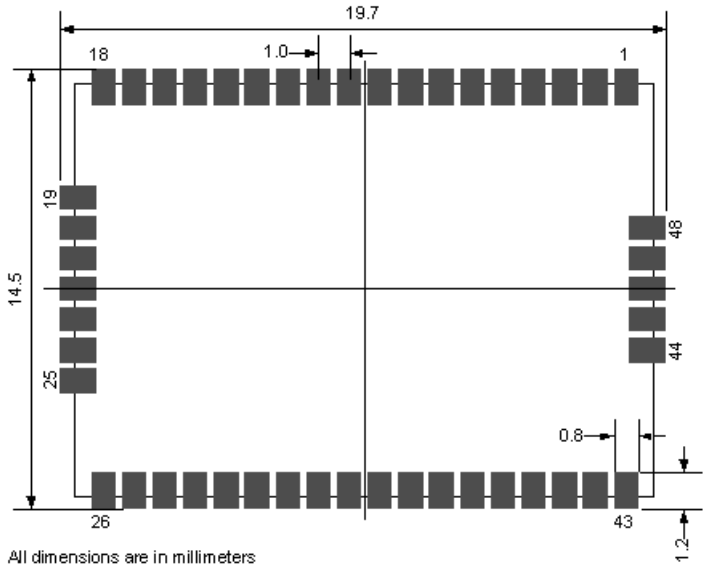

3.5 Soldering Profile

The J-STD-020C-compliant soldering profile is recommended, as given below.

Table 3-7. Soldering Profile[1]

Profile Feature	Green Package
Average ramp-up rate (217 °C to peak)	3 °C/s max.
Preheat temperature 175 °C ± 25 °C	180 s max.
Temperature maintained above 217 °C	60 s to 150 s
Time within 5 °C of actual peak temperature	20 s to 40 s
Peak temperature range	6 °C/s max.
Ramp-down rate	8 minutes max.

Note: 1. The package is backward compatible with Pb/Sn soldering profile

3.6 Antenna Reference Design

This section presents PCB design which may be used to combine ZigBit 900 with an external antenna This antenna reference designs is recommended for successful design-in.

Figure 3-5. FCC/CE compliant RF reference design with RP-SMA connector recommended for ATZB-900-B0

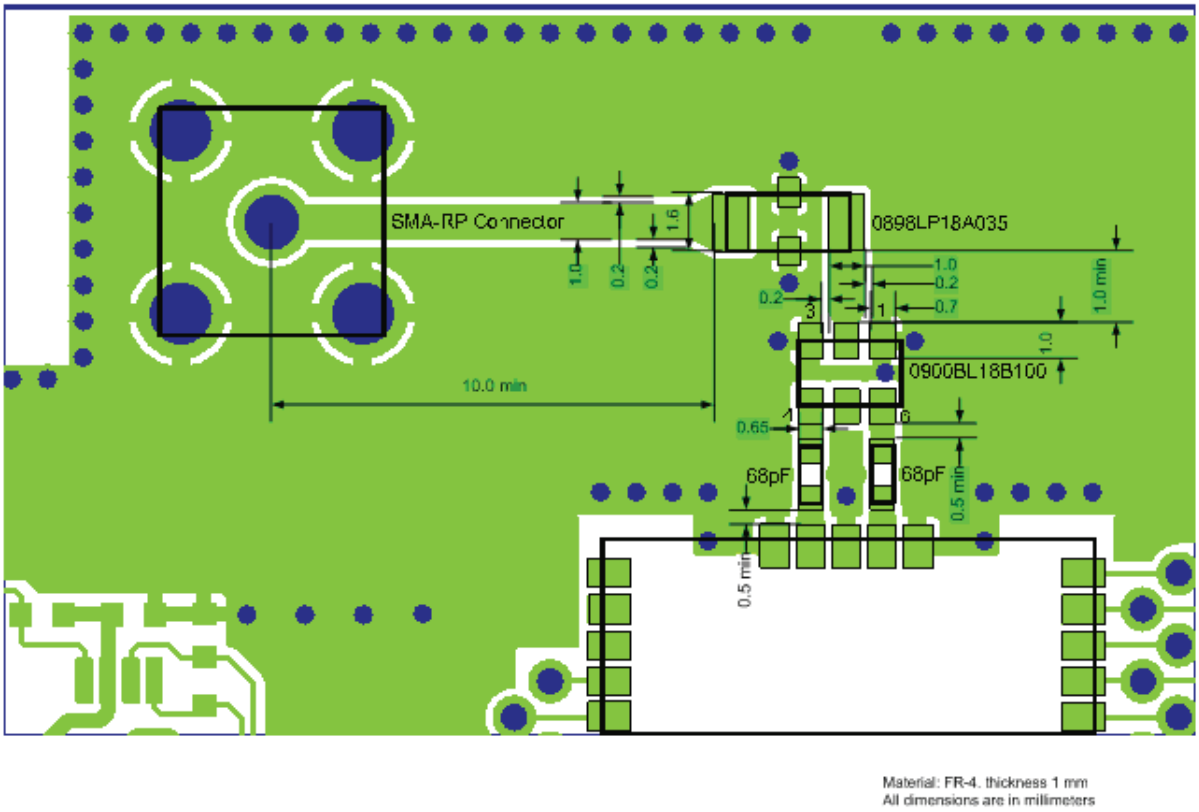

Multiple factors affect proper antenna match, hence, affecting the antenna pattern. The particular factors are the board material and thickness, shields, the material used for enclosure, the board neighborhood, and other components adjacent to antenna.

3.6.1 General recommendations

- Metal enclosure should not be used. Using low profile enclosure might also affect antenna tuning.
- Placing high profile components next to antenna should be avoided.
- Having holes punched around the periphery of the board eliminates parasitic radiation from the board edges also distorting antenna pattern.
- ZigBit 900 module should not be placed next to the consumer electronics which might interfere with ZigBit 900's RF frequency band.

The board design should prevent propagation of microwave field inside the board material. Electromagnetic waves of high frequency may penetrate the board thus making the edges of the board radiate, which may distort the antenna pattern. To eliminate this effect, metalized and grounded holes must be placed around the board's edges.

Section 4

Ordering Information

4.1 Ordering Information

Part Number	Description
ATZB-900-B0R[1]	783/868/915 MHz IEEE802.15.4/ZigBee Wireless Module w/ Balanced RF Port

Note: 1. Tape and Reel quantity: 200

Headquarters

Atmel Corporation
2325 Orchard Parkway
San Jose, CA 95131
USA
Tel: 1(408) 441-0311
Fax: 1(408) 487-2600

International

Atmel Asia
Unit 1-5 & 16, 19/F
BEA Tower, Millennium City 5
418 Kwun Tong Road
Kwun Tong, Kowloon
Hong Kong
Tel: (852) 2245-6100
Fax: (852) 2722-1369

Atmel Europe
Le Krebs
8, Rue Jean-Pierre Timbaud
BP 309
78054 Saint-Quentin-en-
Yvelines Cedex
France
Tel: (33) 1-30-60-70-00
Fax: (33) 1-30-60-71-11

Atmel Japan
9F, Tonetsu Shinkawa Bldg.
1-24-8 Shinkawa
Chuo-ku, Tokyo 104-0033
Japan
Tel: (81) 3-3523-3551
Fax: (81) 3-3523-7581

Product Contact

Web Site
www.atmel.com

Technical Support
avr@atmel.com

Sales Contact
www.atmel.com/contacts

Literature Requests
www.atmel.com/literature

Disclaimer: The information in this document is provided in connection with Atmel products. No license, express or implied, by estoppel or otherwise, to any intellectual property right is granted by this document or in connection with the sale of Atmel products. **EXCEPT AS SET FORTH IN ATMEL'S TERMS AND CONDITIONS OF SALE LOCATED ON ATMEL'S WEB SITE, ATMEL ASSUMES NO LIABILITY WHATSOEVER AND DISCLAIMS ANY EXPRESS, IMPLIED OR STATUTORY WARRANTY RELATING TO ITS PRODUCTS INCLUDING, BUT NOT LIMITED TO, THE IMPLIED WARRANTY OF MERCHANTABILITY, FITNESS FOR A PARTICULAR PURPOSE, OR NON-INFRINGEMENT. IN NO EVENT SHALL ATMEL BE LIABLE FOR ANY DIRECT, INDIRECT, CONSEQUENTIAL, PUNITIVE, SPECIAL OR INCIDENTAL DAMAGES (INCLUDING, WITHOUT LIMITATION, DAMAGES FOR LOSS OF PROFITS, BUSINESS INTERRUPTION, OR LOSS OF INFORMATION) ARISING OUT OF THE USE OR INABILITY TO USE THIS DOCUMENT, EVEN IF ATMEL HAS BEEN ADVISED OF THE POSSIBILITY OF SUCH DAMAGES.** Atmel makes no representations or warranties with respect to the accuracy or completeness of the contents of this document and reserves the right to make changes to specifications and product descriptions at any time without notice. Atmel does not make any commitment to update the information contained herein. Unless specifically provided otherwise, Atmel products are not suitable for, and shall not be used in, automotive applications. Atmel's products are not intended, authorized, or warranted for use as components in applications intended to support or sustain life.

© 2009 Atmel Corporation. All rights reserved. Atmel®, Atmel logo and combinations thereof, and others are registered trademarks or trademarks of Atmel Corporation or its subsidiaries. Other terms and product names may be trademarks of others.