BGA Heat Sink - High Performance Straight Fin w/Thermal Tape

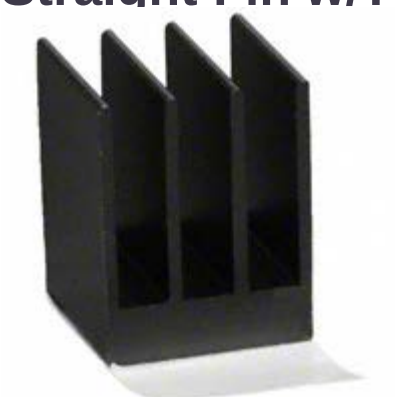

Image above is for illustration purpose only.

ATS Part#: **ATS-54150R-C1-R0**

Description: 15.00 x 15.00 x 19.50 mm BGA Heat Sink - High Performance Straight Fin w/Thermal Tape

Heat Sink Type: Straight Fin

Heat Sink Attachment: Thermal Tape

Equivalent Part Number: ATS-54150R-C2-R0

Features & Benefits

- High aspect ratio, straight fin heat sinks that are ideal for compact PCB environments
- Designed specifically for BGAs and other surface mount packages
- Comes preassembled with high performance thermal interface material

Thermal Performance

AIR VELOCITY		@200 LFM 1.0 M/S	@300 LFM 1.5 M/S	@400 LFM 2.0 M/S	@500 LFM 2.5 M/S	@600 LFM 3.0 M/S	@700 LFM 3.5 M/S	@800 LFM 4.0 M/S
THERMAL RESISTANCE	Unducted Flow	13.4 °C/W	11.1 °C/W	9.7 °C/W	8.8 °C/W	8.1 °C/W	7.5 °C/W	7.1 °C/W
	Ducted Flow	9.5	N/A	N/A	N/A	N/A	N/A	N/A

Product Detail

Schematic Image	Dimension A	Dimension B	Dimension C	Dimension D	TIM	Finish
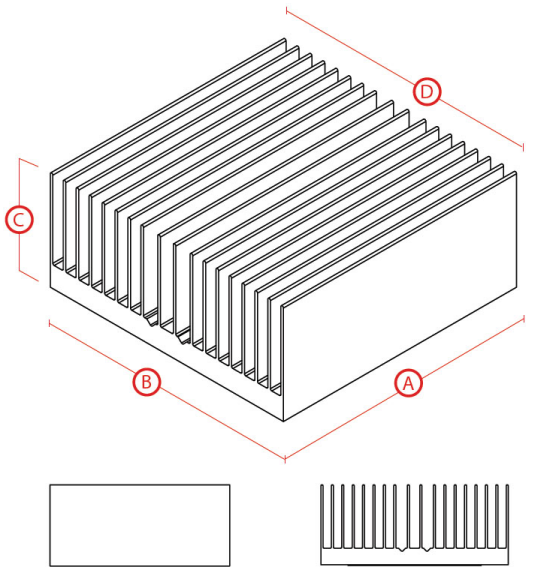	15.00 mm	15.00 mm	19.50 mm	N/A mm	T412	BLACK-ANODIZED

Image above is for illustration purpose only.

Notes:

- Dimension A and B refer to component size.
- Dimension C is the heat sink height from the bottom of the base to the top of the fin field.
- ATS-54150R-C2-R0 is the exact heat sink assembly with an equivalent thermal interface material (Saint-Gobain C675).
- Thermal performance data are provided for reference only. Actual performance may vary by application.
- ATS reserves the right to update or change its products without notice to improve the design or performance.
- ATS certifies that this heat sink assembly is RoHS-6 and REACH compliant.
- Contact ATS to learn about custom options available.

For more information, to find a distributor or to place an order, please contact us at 781-769-2800 (North America), **sales@qats.com** or **www.qats.com**.

© 2013 Advanced Thermal Solutions, Inc. | 89-27 Access Road | Norwood MA | 02062 | USA

ATS ADVANCED THERMAL SOLUTIONS, INC. Innovations in Thermal Management®