ATS-49 and MP-1 Crystals



MP-1 (HC-49/U) **00.0000 MHz** (customer specified frequency)

MP-1-R (HC-49/U) **00.0000 MHz** (RoHS Compliant and customer specified frequency)

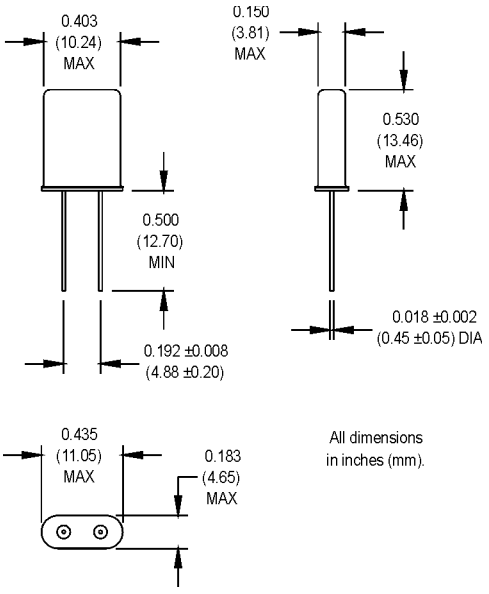

All dimensions in inches (mm).

Equivalent Series Resistance (ESR), Max.	MP-1
Fundamental (AT-cut)	
1.8432 to 1.999 MHz	700 Ω
2.000 to 2.399 MHz	600 Ω
2.400 to 3.299 MHz	400 Ω
3.300 to 3.569 MHz	140 Ω
3.570 to 3.999 MHz	100 Ω
4.000 to 5.999 MHz	75 Ω
6.000 to 7.999 MHz	50 Ω
8.000 to 10.999 MHz	40 Ω
11.000 to 14.999 MHz	30 Ω
15.000 to 19.999 MHz	25 Ω
20.000 to 34.000 MHz	25 Ω
Third Overtones (AT-cut)	
20.000 to 49.999 MHz	40 Ω
50.000 to 75.000 MHz	50 Ω
Fifth Overtones (AT-cut)	
50.000 to 125.000 MHz	90 Ω
Seventh Overtones (AT-cut)	
125.000 to 200.000 MHz	150 Ω

NOTES:

Series resonant designated by "SR" prefix (i.e., **SR**ATS-49 or **SR**MP-1).

ATS-49

Because this product is based on AT-strip technology, not all frequencies in the range stated are available. Contact the factory for availability of specific frequencies.

BT cut fundamentals from 24.000 to 40.000 MHz have a stability of ±100 ppm.

Equivalent Series Resistance (ESR), Max.	ATS-49
Fundamental (AT-cut)	
3.579 to 3.999 MHz	200 Ω
4.000 to 4.999 MHz	150 Ω
5.000 to 5.999 MHz	120 Ω
6.000 to 9.999 MHz	100 Ω
10.000 to 13.999 MHz	80 Ω
14.000 to 40.000 MHz	50 Ω
Fundamental (BT-cut)	
24.000 to 50.000 MHz	100 Ω
Third Overtones (AT-cut)	
25.000 to 39.999 MHz	100 Ω
40.000 to 72.000 MHz	80 Ω

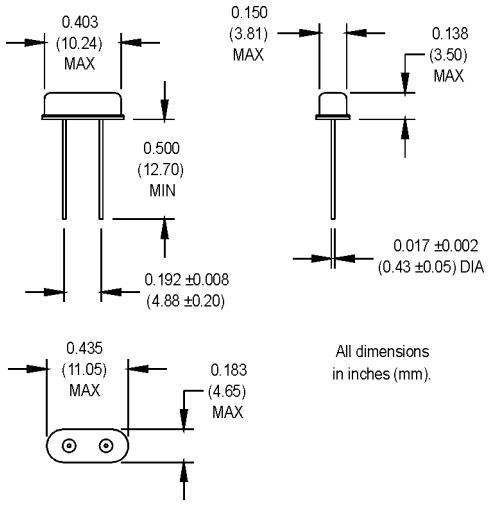

All dimensions in inches (mm).

***ATS-49 00.0000 MHz** (customer specified)

***ATS-49-R 00.0000 MHz** (RoHS Compliant and customer specified frequency)

Electrical Specifications	PARAMETER	Symbol	Min.	Typ.	Max.	Units	Condition/Notes
	Frequency Range	F	1.8432 3.579545		200 72	MHz MHz	MP-1 ATS-49
	Frequency Tolerance	F/F			±30	ppm	
	Frequency Stability	ΔF/F			±50	ppm	
	Operating Temperature	T_A	-10		+70	°C	
	Storage Temperature	T_S				°C	
	Aging 1st Year Thereafter (per year)						
	Load Capacitance	C_L		18		pF	
	Shunt Capacitance	C_O			7	pF	
	ESR		See ESR Tables				
	Drive Level	D_L			1 500	mW µW	MP-1 ATS-49
	Insulation Resistance	I_R	500			MΩ	

MtronPTI reserves the right to make changes to the product(s) and service(s) described herein without notice. No liability is assumed as a result of their use or application.