pushPIN™ Heat Sink Assembly

ATS Part#: ATS-20C-38-C2-R0

Description: pushPIN™ HS ASMBLY,FINE-PITCH,STRAIGHT, HOLE PATTERN:4-CORNER,BLUE,T766

Heat Sink Type: pushPIN™ Heat Sink Assembly

Heat Sink Attachment: pushPIN™ / Spring Kit

Features & Benefits

- Quick Attachment – Push pins feature a flexible barb at the end designed to engage with pre-drilled holes in a PCB.
- Compression Springs add the necessary force to hold the assembly together for secure attachment. Select from over 21 different springs to achieve precise force required.
- Push Pin Material available in brass or plastic in 10 sizes ranging from 9-20mm in length. Stainless steel hardware kit available for more secure attachment. Visit www.qats.com for available options.
- Heat Sinks Designed for All Airflow Conditions. Select from over 112 fine pitch HS designed for high velocity air flows and 98 course pitch HS designed for low velocity air flow conditions.
- Pre-assembled with phase-changing material for increased thermal performance. Double-sided thermal tape and no TIM options available to meet application-specific requirements.
- Lightweight, aluminum HS extruded from AL6063 provide optimal heat transfer with a blue anodized finish.
- All components are RoHS and REACH compliant.
- Industry standard hole pattern. Recommended through hole size is 3.175mm

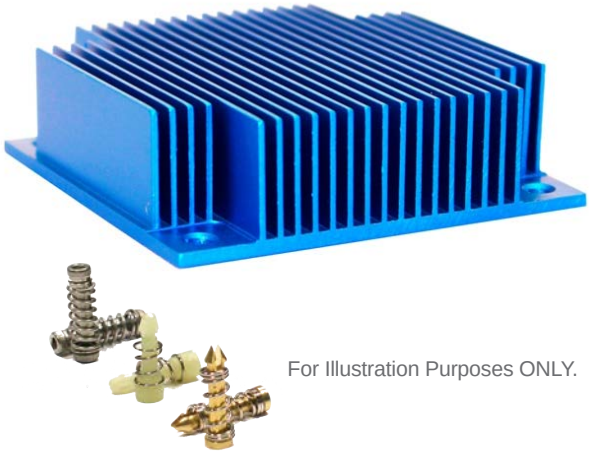

For Illustration Purposes ONLY.

Bill of Material

		Qty
Heat Sink:	ATS-FPS037058023-38-C2-R0	1
Push Pin:	ATS-PP-03	4
Springs:	ATS-PPS-20	4

Thermal Performance

AIR VELOCITY - LFM (m/s)		100 (0.5)	200 (1.0)	300 (1.5)	400 (2.0)	500 (2.5)	600 (3.0)	700 (3.5)
Thermal Resistance °C/W	Unducted Flow	6.42	2.21	1.31	0.98	0.82	0.72	0.66
	Ducted Flow	1.25	0.80	0.65	0.58	0.53	0.49	0.46

Fin Pitch	Fin Type	Hole Pattern
FINE-PITCH	STRAIGHT	4-CORNER

Product Detail

P/N	Dimensions					Push Pin	Spring	TIM	Finish
	A	B	C	E	F				
ATS-20C-38-C2-R0	36.83	57.6	22.86	26.2	47.2	ATS-PP-03	ATS-PPS-20	T766	BLUE ANODIZED

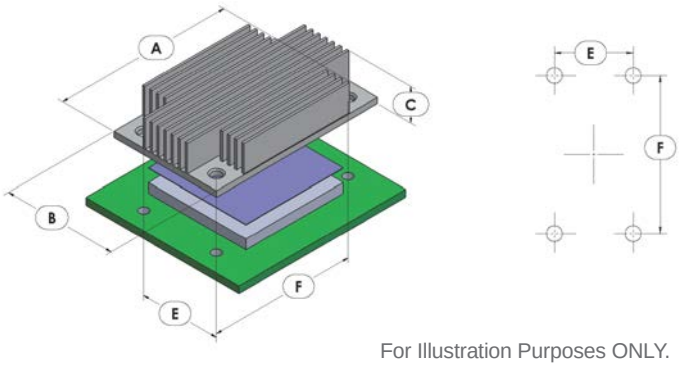

For Illustration Purposes ONLY.

NOTES:

1) Dimension A is the length of the heat sink in the direction of the flow.
2) Dimension B is the width of the heat sink perpendicular to the flow direction.
3) Dimension C is the heat sink height from the bottom of the base to the top of the fin field.
4) Dimension E is the distance between holes perpendicular to the direction of flow.
5) Dimension F is the distance between holes in the direction of flow.
6) Thermal performance data are provided for reference only. Actual performance may vary by application.
7) ATS reserves the right tp update or change its products without notice to improve the design or performance.
8) ATS certifies that this heat sink assemby is RoHS-6 and REACH compliant.
9) Contact ATS to learn about custom options available.

ATS ADVANCED THERMAL SOLUTIONS, INC.
Innovations in Thermal Management®

For further technical information, please contact Advanced Thermal Solutions, Inc.

89-27 ACCESS ROAD, NORWOOD, MA 02062 USA | T: 781.769. 2800 F: 781.769.9979 | WWW.QATS.COM R2-0917