Features

- **x16 Organization Utilizing “No Connects” for Pins 6 and 7**
- **Low Voltage and Standard Voltage Operation**
  - **5.0 (V_{CC} = 4.5V to 5.5V)**
  - **2.7 (V_{CC} = 2.7V to 5.5V)**
  - **2.5 (V_{CC} = 2.5V to 5.5V)**
- **3-Wire Serial Interface**
- **2 MHz Clock Rate (5V) Compatibility**
- **Self-Timed Write Cycle (10 ms max)**
- **High Reliability**
  - **Endurance: 1 Million Cycles**
  - **Data Retention: 100 Years**
- **Automotive Grade and Extended Temperature Devices Available**
- **8-Pin PDIP and JEDEC SOIC Packages**

Description

The AT93C46B provides 1024 bits of serial electrically erasable programmable read only memory (EEPROM) organized as 64 words of 16 bits each. The device is optimized for use in many industrial and commercial applications where low power and low voltage operation are essential. The AT93C46B is available in space saving 8-pin PDIP and 8-pin JEDEC packages.

The AT93C46B is enabled through the Chip Select pin (CS), and accessed via a 3-wire serial interface consisting of Data Input (DI), Data Output (DO), and Shift Clock (SK). Upon receiving a READ instruction at DI, the address is decoded and the data is clocked out serially on the data output pin DO. The WRITE cycle is completely self-timed and no separate ERASE cycle is required before WRITE. The WRITE cycle is only enabled when the part is in the ERASE/WRITE ENABLE state. When CS is brought “high” following the initiation of a WRITE cycle, the DO pin outputs the READY/BUSY status of the part.

The AT93C46B is available in 4.5V to 5.5V, 2.7V to 5.5V, and 2.5V to 5.5V versions.

Pin Configuration

Pin Name	Function
CS	Chip Select
SK	Serial Data Clock
DI	Serial Data Input
DO	Serial Data Output
GND	Ground
V_{CC}	Power Supply
NC	No Connect

8-Pin PDIP

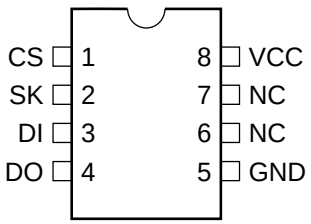

8-Pin SOIC

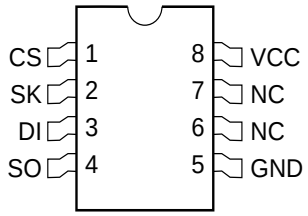

3-Wire Serial E^2PROMs

1K (64 x 16)

AT93C46B

0917A-A–11/97

Absolute Maximum Ratings*

Operating Temperature	-55°C to +125°C
Storage Temperature	-65°C to +150°C
Voltage on Any Pin with Respect to Ground	-1.0V to +7.0V
Maximum Operating Voltage	6.25V
DC Output Current	5.0 mA

*NOTICE: Stresses beyond those listed under “Absolute Maximum Ratings” may cause permanent damage to the device. This is a stress rating only and functional operation of the device at these or any other conditions beyond those indicated in the operational sections of this specification is not implied. Exposure to absolute maximum rating conditions for extended periods may affect device reliability.

Block Diagram

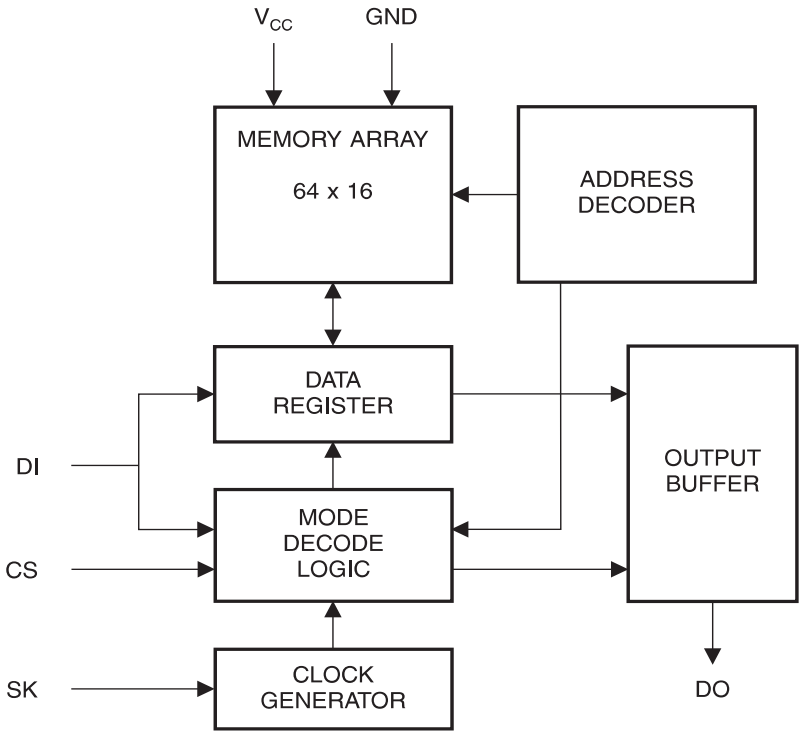

Pin Capacitance[1]

Applicable over recommended operating range from T_A = 25°C, f = 1.0 MHz, V_{CC} = +5.0V (unless otherwise noted).

	Test Conditions	Max	Units	Conditions
C_{OUT}	Output Capacitance (DO)	5	pF	V_{OUT} = 0V
C_{IN}	Input Capacitance (CS, SK, DI)	5	pF	V_{IN} = 0V

Note: 1. This parameter is characterized and is not 100% tested.

DC Characteristics

Applicable over recommended operating range from: T_{AI} = -40°C to +85°C, V_{CC} = +2.5V to +5.5V,
T_{AC} = 0°C to +70°C, V_{CC} = +2.5V to +5.5V (unless otherwise noted).

Symbol	Parameter	Test Condition		Min	Typ	Max	Units
V_{CC2}	Supply Voltage			2.5		5.5	V
V_{CC3}	Supply Voltage			2.7		5.5	V
V_{CC4}	Supply Voltage			4.5		5.5	V
I_{CC}	Supply Current	V_{CC} = 5.0V	READ at 1.0 MHz		0.5	2.0	mA
			WRITE at 1.0 MHz		0.5	2.0	mA
I_{SB1}	Standby Current	V_{CC} = 2.5V	CS = 0V		14.0	20.0	µA
I_{SB2}	Standby Current	V_{CC} = 2.7V	CS = 0V		14.0	20.0	µA
I_{SB3}	Standby Current	V_{CC} = 5.0V	CS = 0V		35.0	50.0	µA
I_{IL}	Input Leakage	V_{IN} = 0V to V_{CC}			0.1	1.0	µA
I_{OL}	Output Leakage	V_{IN} = 0V to V_{CC}			0.1	1.0	µA
V_{IL1}[1] V_{IH1}[1]	Input Low Voltage Input High Voltage	4.5V ≤ V_{CC} ≤ 5.5V		-0.1 2.0		0.8 V_{CC} + 1	V
V_{IL2}[1] V_{IH2}[1]	Input Low Voltage Input High Voltage	1.8V ≤ V_{CC} ≤ 2.7V		0.0 V_{CC} x 0.7		V_{CC} x 0.3 V_{CC} + 1	V
V_{OL1} V_{OH1}	Output Low Voltage Output High Voltage	4.5V ≤ V_{CC} ≤ 5.5V	I_{OL} = 2.1 mA			0.4	V
			I_{OH} = -0.4 mA	2.4			V
V_{OL2} V_{OH2}	Output Low Voltage Output High Voltage	1.8V ≤ V_{CC} ≤ 2.7V	I_{OL} = 0.15 mA			0.2	V
			I_{OH} = -100 µA	V_{CC} - 0.2			V

Note: 1. V_{IL} and V_{IH} max are reference only and are not tested.

AC Characteristics

Applicable over recommended operating range from T_A = -40°C to + 85°C, V_{CC} = +2.5V to + 5.5V, C_L = 1 TTL Gate and 100 pF (unless otherwise noted).

Symbol	Parameter	Test Condition		Min	Typ	Max	Units
f_{SK}	SK Clock Frequency	$4.5V \le V_{CC} \le 5.5V$ $2.7V \le V_{CC} \le 5.5V$ $2.5V \le V_{CC} \le 5.5V$		0 0 0		2 1 0.5	MHz
t_{SKH}	SK High Time	$4.5V \le V_{CC} \le 5.5V$ $2.7V \le V_{CC} \le 5.5V$ $2.5V \le V_{CC} \le 5.5V$		250 250 500			ns
t_{SKL}	SK Low Time	$4.5V \le V_{CC} \le 5.5V$ $2.7V \le V_{CC} \le 5.5V$ $2.5V \le V_{CC} \le 5.5V$		250 250 500			ns
t_{CS}	Minimum CS Low Time	$4.5V \le V_{CC} \le 5.5V$ $2.7V \le V_{CC} \le 5.5V$ $2.5V \le V_{CC} \le 5.5V$		250 250 500			ns
t_{CSS}	CS Setup Time	Relative to SK	$4.5V \le V_{CC} \le 5.5V$ $2.7V \le V_{CC} \le 5.5V$ $2.5V \le V_{CC} \le 5.5V$	50 50 100			ns
t_{DIS}	DI Setup Time	Relative to SK	$4.5V \le V_{CC} \le 5.5V$ $2.7V \le V_{CC} \le 5.5V$ $2.5V \le V_{CC} \le 5.5V$	100 100 200			ns
t_{CSH}	CS Hold Time	Relative to SK		0			ns
t_{DIH}	DI Hold Time	Relative to SK	$4.5V \le V_{CC} \le 5.5V$ $2.7V \le V_{CC} \le 5.5V$ $2.5V \le V_{CC} \le 5.5V$	100 100 200			ns
t_{PD1}	Output Delay to ‘1’	AC Test	$4.5V \le V_{CC} \le 5.5V$ $2.7V \le V_{CC} \le 5.5V$ $2.5V \le V_{CC} \le 5.5V$			250 250 500	ns
t_{PD0}	Output Delay to ‘0’	AC Test	$4.5V \le V_{CC} \le 5.5V$ $2.7V \le V_{CC} \le 5.5V$ $2.5V \le V_{CC} \le 5.5V$			250 250 500	ns
t_{SV}	CS to Status Valid	AC Test	$4.5V \le V_{CC} \le 5.5V$ $2.7V \le V_{CC} \le 5.5V$ $2.5V \le V_{CC} \le 5.5V$			250 250 500	ns
t_{DF}	CS to DO in High Impedance	AC Test CS = V_{IL}	$4.5V \le V_{CC} \le 5.5V$ $2.7V \le V_{CC} \le 5.5V$ $2.5V \le V_{CC} \le 5.5V$			100 100 200	ns
t_{WP}	Write Cycle Time			0.1		10	ms
			$4.5V \le V_{CC} \le 5.5V$		1		ms
Endurance		25°C, V_{CC} = 5.0V, Page Mode		1M			Cycles

Instruction Set for the AT93C46B

Instruction	SB	Op Code	Address (x16)	Comments
READ	1	10	A_5 - A_0	Reads data stored in memory, at specified address.
EWEN	1	00	11XXXX	Write enable must precede all programming modes.
ERASE	1	11	A_5 - A_0	Erase memory location A_n - A_0.
WRITE	1	01	A_5 - A_0	Writes memory location A_n - A_0.
ERAL	1	00	10XXXX	Erases all memory locations. Valid only at V_{CC} = 4.5V to 5.5V.
WRAL	1	00	01XXXX	Writes all memory locations. Valid only at V_{CC} = 4.5V to 5.5V.
EWDS	1	00	00XXXX	Disables all programming instructions.

Functional Description

The AT93C46B is accessed via a simple and versatile three-wire serial communication interface. Device operation is controlled by seven instructions issued by the host processor. A valid instruction starts with a rising edge of CS and consists of a Start Bit (logic '1') followed by the appropriate Op Code and the desired memory Address location.

READ (READ): The Read (READ) instruction contains the Address code for the memory location to be read. After the instruction and address are decoded, data from the selected memory location is available at the serial output pin DO. Output data changes are synchronized with the rising edges of serial clock SK. It should be noted that a dummy bit (logic '0') precedes the 16 bit data output string.

ERASE/WRITE (EWEN): To assure data integrity, the part automatically goes into the Erase/Write Disable (EWDS) state when power is first applied. An Erase/Write Enable (EWEN) instruction must be executed first before any programming instructions can be carried out. Please note that once in the Erase/Write Enable state, programming remains enabled until an Erase/Write Disable (EWDS) instruction is executed or V_{CC} power is removed from the part.

ERASE (ERASE): The Erase (ERASE) instruction programs all bits in the specified memory location to the logical '1' state. The self-timed erase cycle starts once the ERASE instruction and address are decoded. The DO pin outputs the READY / BUSY status of the part if CS is brought high after being kept low for a minimum of 250 ns (t_{CS}). A logic '1' at pin DO indicates that the selected memory location has been erased, and the part is ready for another instruction.

WRITE (WRITE): The Write (WRITE) instruction contains the 16 bits of data to be written into the specified memory location. The self-timed programming cycle starts after the last bit of data is received at serial data input pin DI. The DO pin outputs the READY/BUSY status of the part if CS is brought high after being kept low for a minimum of 250 ns (t_{CS}). A logic '0' at DO indicates that programming is still in progress. A logic '1' indicates that the memory location at the specified address has been written with the data pattern contained in the instruction and the part is ready for further instructions.

ERASE ALL (ERAL): The Erase All (ERAL) instruction programs every bit in the memory array to the logic '1' state and is primarily used for testing purposes. The DO pin outputs the READY/BUSY status of the part if CS is brought high after being kept low for a minimum of 250 ns (t_{CS}). The ERAL instruction is valid only at V_{CC} = 5.0V ± 10%.

WRITE ALL (WRAL): The Write All (WRAL) instruction programs all memory locations with the data patterns specified in the instruction. The DO pin outputs the READY/BUSY status of the part if CS is brought high after being kept low for a minimum of 250 ns (t_{CS}). The WRAL instruction is valid only at V_{CC} = 5.0V ± 10%.

ERASE/WRITE DISABLE (EWDS): To protect against accidental data disturb, the Erase/Write Disable (EWDS) instruction disables all programming modes and should be executed after all programming operations. The operation of the READ instruction is independent of both the EWEN and EWDS instructions and can be executed at any time.

Synchronous Data Timing

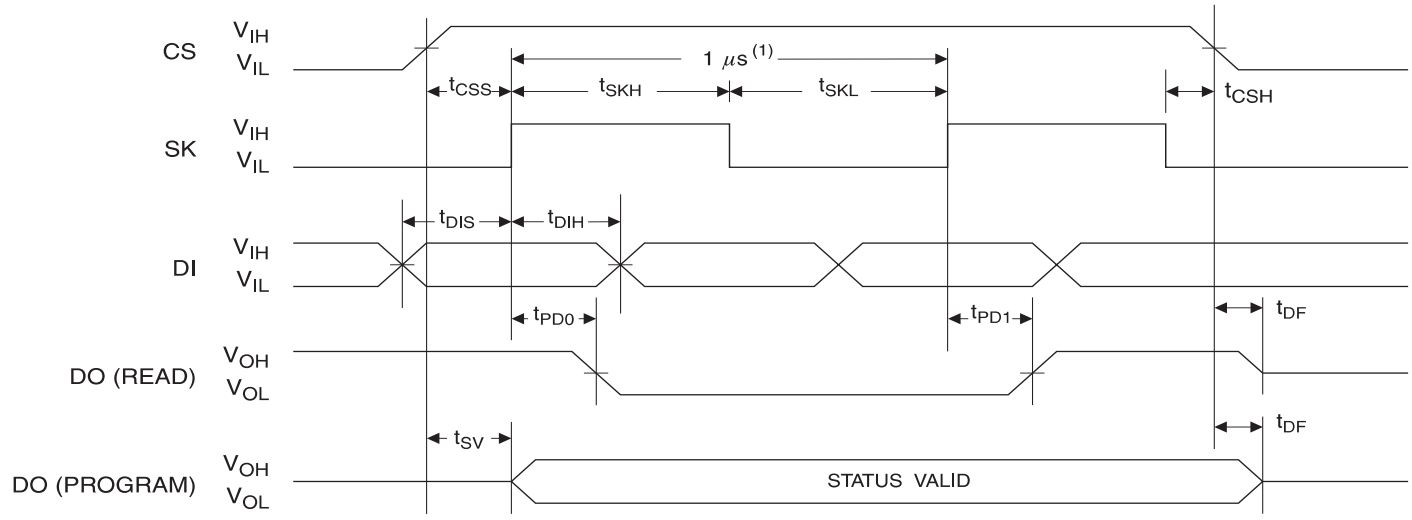

Note: 1. This is the minimum SK period.

Organization Key for Timing Diagrams

I/O	AT93C46B (x16)
A_N	A_5
D_N	D_{15}

READ Timing

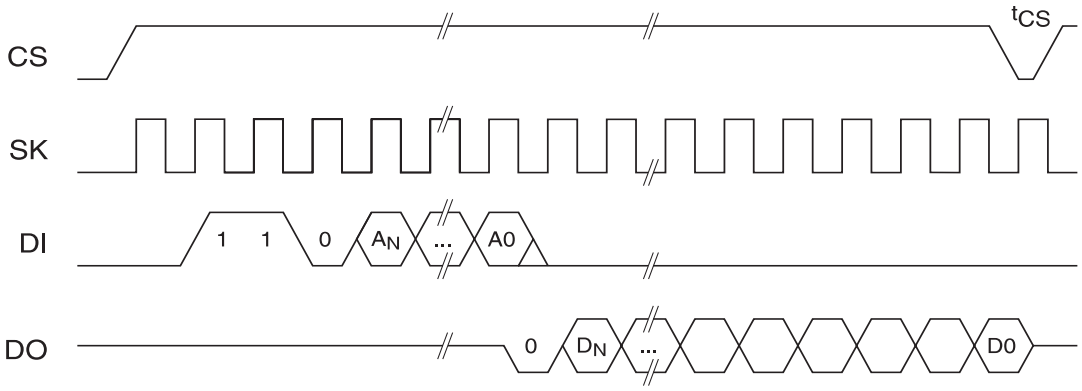

EWEN Timing

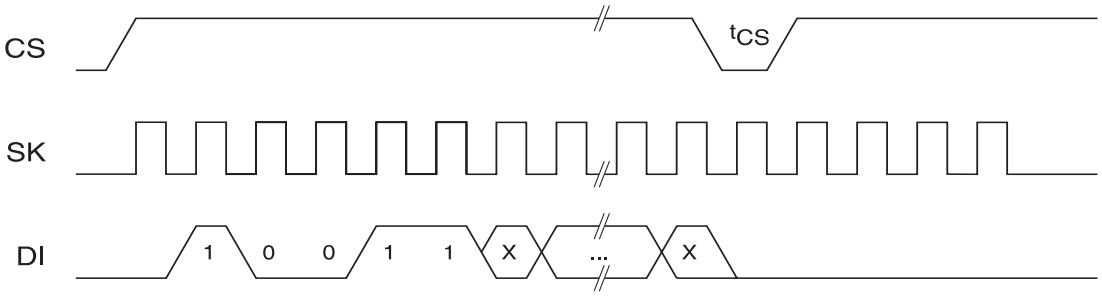

EWDS Timing(1)

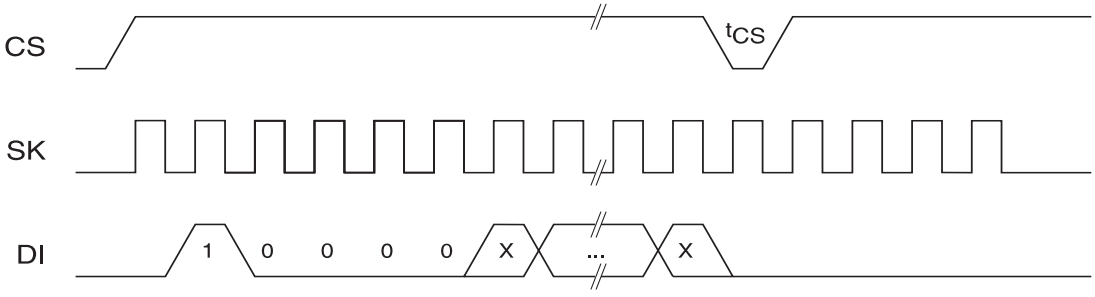

Note: 1. Requires a minimum of nine clock cycles.

WRITE Timing

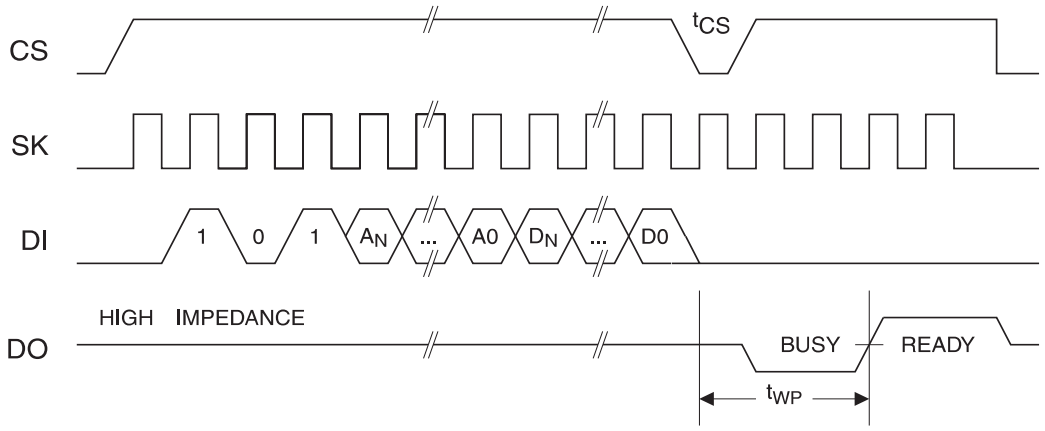

WRAL Timing(1)(2)

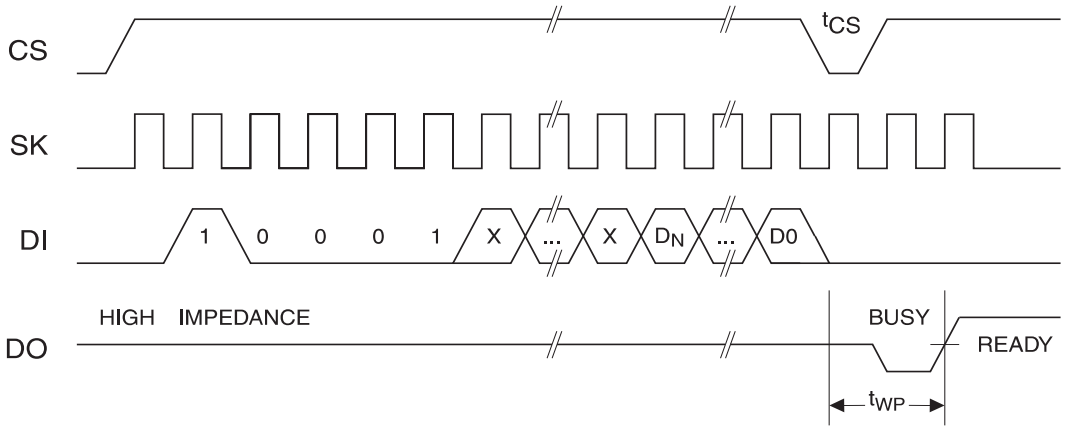

Notes: 1. Valid only at V_{CC} = 4.5V to 5.5V.
2. Requires a minimum of nine clock cycles.

ERASE Timing

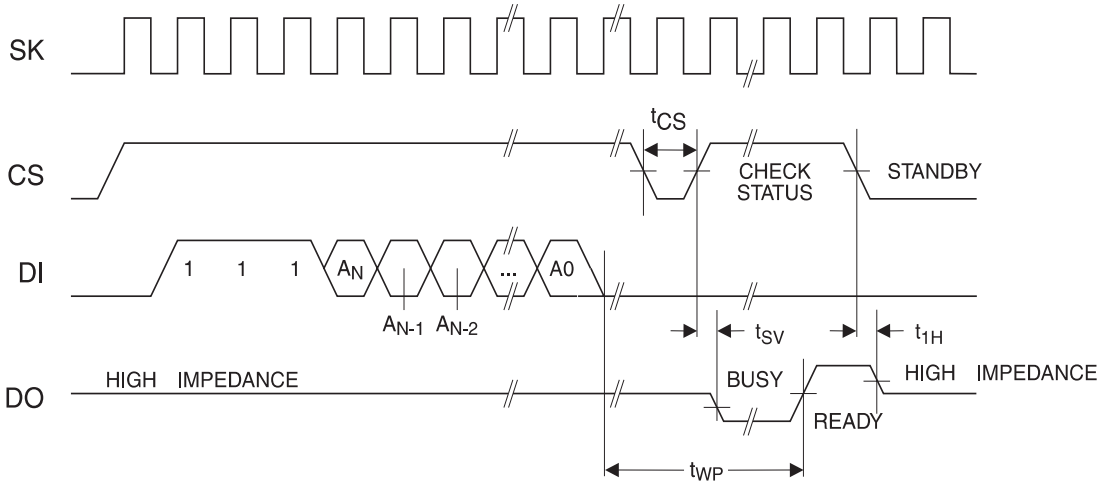

TERAL Timing(1)

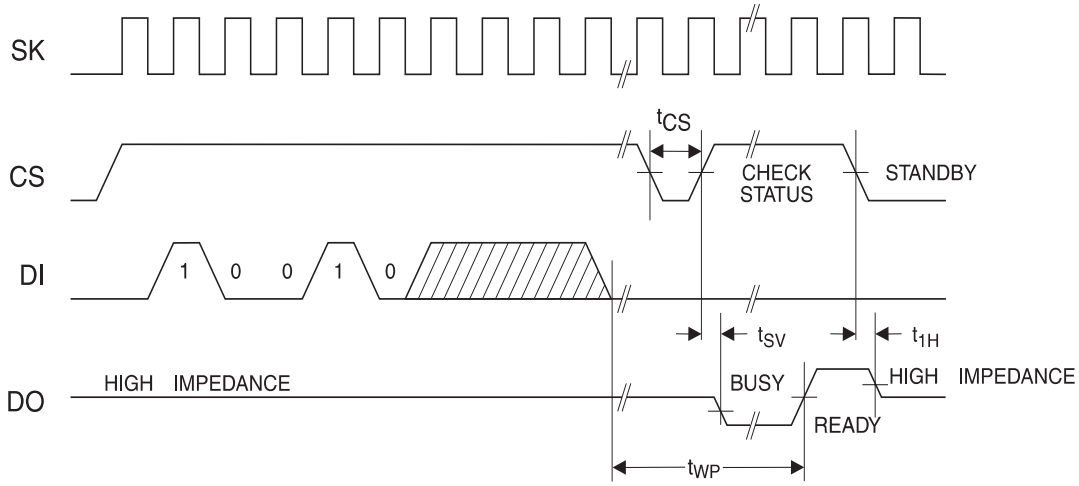

Note: 1. Valid only at V_{CC} = 4.5V to 5.5V.

Ordering Information

t_{WP} (max) (ms)	I_{CC} (max) (µA)	I_{SB} (max) (µA)	f_{MAX} (kHz)	Ordering Code	Package	Operation Range
10	2000	50.0	2000	AT93C46B-10PC AT93C46B-10SC	8P3 8S1	Commercial (0°C to 70°C)
10	800	20.0	1000	AT93C46B-10PC-2.7 AT93C46B-10SC-2.7	8P3 8S1	Commercial (0°C to 70°C)
10	600	20.0	500	AT93C46B-10PC-2.5 AT93C46B-10SC-2.5	8P3 8S1	Commercial (0°C to 70°C)
10	2000	50.0	2000	AT93C46B-10PI AT93C46B-10SI	8P3 8S1	Industrial (-40°C to 85°C)
10	800	20.0	1000	AT93C46B-10PI-2.7 AT93C46B-10SI-2.7	8P3 8S1	Industrial (-40°C to 85°C)
10	600	20.0	500	AT93C46B-10PI-2.5 AT93C46B-10SI-2.5	8P3 8S1	Industrial (-40°C to 85°C)

Package Type	
8P3	8 Lead, 0.300" Wide, Plastic Dual Inline Package (PDIP)
8S1	8 Lead, 0.150" Wide, Plastic Gull Wing Small Outline (JEDEC SOIC)
Options	
Blank	Standard Device (4.5V to 5.5V)
-2.7	Low Voltage (2.7V to 5.5V)
-2.5	Low Voltage (2.5V to 5.5V)