Features

- Utilizes the ARM7TDMI® ARM® Thumb® Processor Core
  - High-performance 32-bit RISC Architecture
  - High-density 16-bit Instruction Set
  - Leader in MIPS/Watt
  - Embedded ICE (In-circuit Emulation)
- 8K Bytes Internal SRAM
- Fully Programmable External Bus Interface (EBI)
  - Maximum External Address Space of 64M Bytes
  - Up to 8 Chip Selects
  - Software Programmable 8/16-bit External Data Bus
- 8-channel Peripheral Data Controller
- 8-level Priority, Individually Maskable, Vectored Interrupt Controller
  - 5 External Interrupts, Including a High-priority, Low-latency Interrupt Request
- 54 Programmable I/O Lines
- 6-channel 16-bit Timer/Counter
  - 6 External Clock Inputs, 2 Multi-purpose I/O Pins per Channel
- 2 USARTs
  - 2 Dedicated Peripheral Data Controller (PDC) Channels per USART
  - Support for up to 9-bit Data Transfers
- 2 Master/Slave SPI Interfaces
  - 2 Dedicated Peripheral Data Controller (PDC) Channels per SPI
  - 8- to 16-bit Programmable Data Length
  - 4 External Slave Chip Selects per SPI
- 3 System Timers
  - Period Interval Timer (PIT); Real-time Timer (RTT); Watchdog Timer (WDT)
- Power Management Controller (PMC)
  - CPU and Peripherals Can be Deactivated Individually
- Clock Generator with 32.768 kHz Low-power Oscillator and PLL
  - Support for 38.4 kHz Crystals
  - Software Programmable System Clock (up to 33 MHz)
- IEEE® 1149.1 JTAG Boundary Scan on All Active Pins
- Fully Static Operation: 0 Hz to 33 MHz, Internal Frequency Range at V_{DDCORE} = 3.0V, 85° C
- 2.7V to 3.6V Core and PLL Operating Voltage Range; 2.7V to 5.5V I/O Operating Voltage Range
- -40° C to +85° C Temperature Range
- Available in a 144-lead LQFP Package (Green) and a 144-ball BGA Package (RoHS compliant)

AT91 ARM Thumb Microcontrollers

AT91M42800A

Rev. 1779D–ATARM–14-Apr-06

1. Description

The AT91M42800A is a member of the Atmel AT91 16/32-bit microcontroller family, which is based on the ARM7TDMI processor core. This processor has a high-performance 32-bit RISC architecture with a high-density 16-bit instruction set and very low power consumption. In addition, a large number of internally banked registers result in very fast exception handling, making the device ideal for real-time control applications. The AT91 ARM-based MCU family also features Atmel's high-density, in-system programmable, nonvolatile memory technology. The AT91M42800A has a direct connection to off-chip memory, including Flash, through the External Bus Interface.

The Power Management Controller allows the user to adjust device activity according to system requirements, and, with the 32.768 kHz low-power oscillator, enables the AT91M42800A to reduce power requirements to an absolute minimum. The AT91M42800A is manufactured using Atmel's high-density CMOS technology. By combining the ARM7TDMI processor core with on-chip SRAM and a wide range of peripheral functions including timers, serial communication controllers and a versatile clock generator on a monolithic chip, the AT91M42800A provides a highly flexible and cost-effective solution to many compute-intensive applications.

2. Pin Configuration

Figure 2-1. Pin Configuration in TQFP144 Package (Top View)

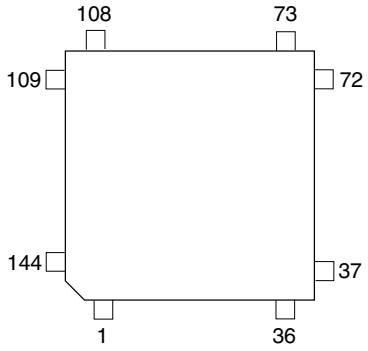

Figure 2-2. Pin Configuration in BGA144 Package (Top View)

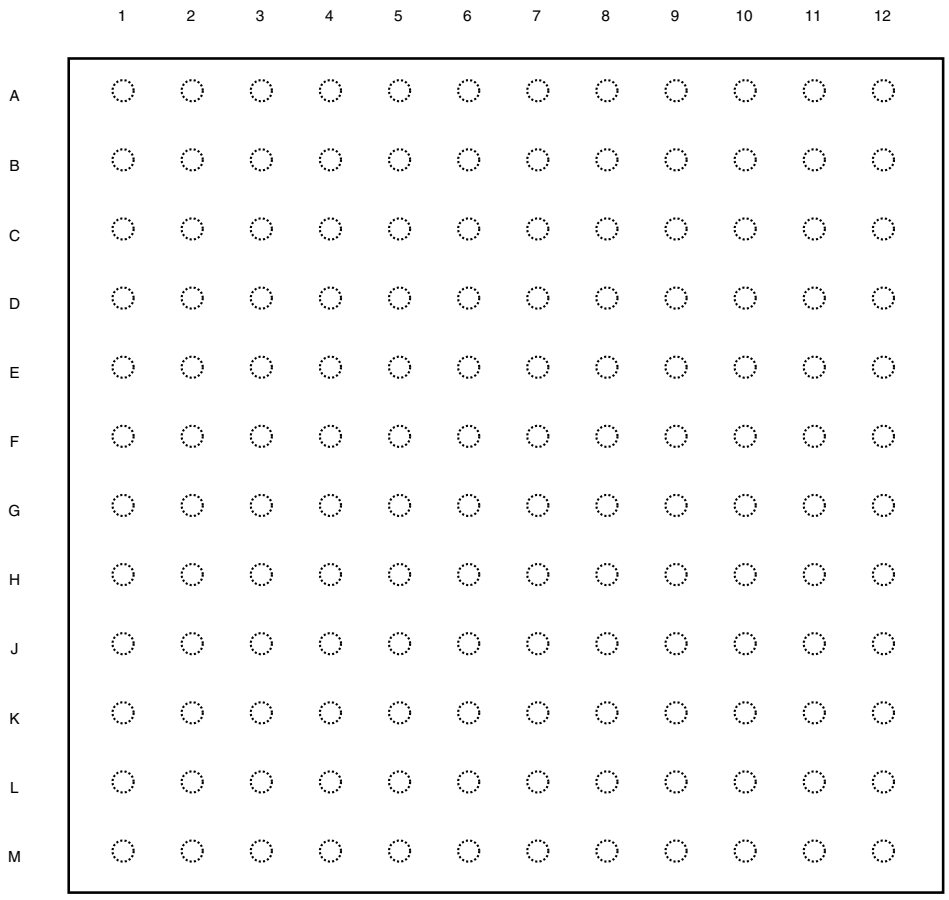

Table 1. AT91M42800A Pinout in TQFP 144 Package

Pin#	Name	Pin#	Name	Pin#	Name	Pin#	Name
1	GND	37	GND	73	GND	109	GND
2	GND	38	GND	74	GND	110	GND
3	NLB/A0	39	D4	75	PB22/TIOA5	111	PA26
4	A1	40	D5	76	PB23/TIOB5	112	MODE0
5	A2	41	D6	77	PA0/IRQ0	113	XIN
6	A3	42	D7	78	PA1/IRQ1	114	XOUT
7	A4	43	D8	79	PA2/IRQ2	115	GND
8	A5	44	D9	80	PA3/IRQ3	116	PLLRCA
9	A6	45	D10	81	PA4/FIQ	117	VDDPLL
10	A7	46	D11	82	PA5/SCK0	118	PLLRCB
11	A8	47	D12	83	PA6/TXD0	119	VDDPLL
12	VDDIO	48	VDDIO	84	VDDIO	120	VDDIO
13	GND	49	GND	85	GND	121	GND
14	A9	50	D13	86	PA7/RXD0	122	NWDOVF
15	A10	51	D14	87	PA8/SCK1	123	PA27/BMS
16	A11	52	D15	88	PA9/TXD1/NTRI	124	MODE1
17	A12	53	PB6/TCLK0	89	PA10/RXD1	125	TMS
18	A13	54	PB7/TIOA0	90	PA11/SPCKA	126	TDI
19	A14	55	PB8/TIOB0	91	PA12/MISOA	127	TDO
20	A15	56	PB9/TCLK1	92	PA13/MOSIA	128	TCK
21	A16	57	PB10/TIOA1	93	PA14/NPCSA0/NSSA	129	NTRST
22	A17	58	PB11/TIOB1	94	PA15/NPCSA1	130	NRST
23	A18	59	PB12/TCLK2	95	PA16/NPCSA2	131	PA28
24	VDDIO	60	VDDIO	96	VDDIO	132	VDDIO
25	GND	61	GND	97	GND	133	GND
26	A19	62	PB13/TIOA2	98	PA17/NPCSA3	134	PA29/PME
27	PB2/A20/CS7	63	PB14/TIOB2	99	PA18/SPCKB	135	NWAIT
28	PB3/A21/CS6	64	PB15/TCLK3	100	PA19/MISOB	136	NOE/NRD
29	PB4/A22/CS5	65	PB16/TIOA3	101	PA20/MOSIB	137	NWE/NWR0
30	PB5/A23/CS4	66	PB17/TIOB3	102	PA21/NPCSB0/NSSB	138	NUB/NWR1
31	D0	67	PB18/TCLK4	103	PA22/NPCSB1	139	NCS0
32	D1	68	PB19/TIOA4	104	PA23/NPCSB2	140	NCS1
33	D2	69	PB20/TIOB4	105	PA24/NPCSB3	141	PB0/NCS2
34	D3	70	PB21/TCLK5	106	PA25/MCKO	142	PB1/NCS3
35	VDDCORE	71	VDDCORE	107	VDDCORE	143	VDDCORE
36	VDDIO	72	VDDIO	108	VDDIO	144	VDDIO

Table 2. AT91M42800A Pinout in BGA 144 Package

Pin#	Name	Pin#	Name	Pin#	Name	Pin#	Name
A1	PB1/NCS3	D1	A2	G1	A17	K1	D1
A2	NCS0	D2	A3	G2	A16	K2	VDDCORE
A3	NCS1	D3	A4	G3	A11	K3	VDDIO
A4	GND	D4	NWAIT	G4	A13	K4	D9
A5	PLLRCB	D5	PA29/PME	G5	GND	K5	D10
A6	GND	D6	PA28	G6	GND	K6	D14
A7	PLLRCA	D7	TCK	G7	GND	K7	PB9/TCLK1
A8	GND	D8	TMS	G8	GND	K8	PB13/TIOA2
A9	XOUT	D9	MODE1	G9	PA9/TXD1/NTRI	K9	PB11/TIOB1
A10	XIN	D10	PA25/MCKO	G10	PA10/RXD1	K10	VDDIO
A11	MODE0	D11	PA21/NPCSB0	G11	PA8/SCK1	K11	PB16/TIOA3
A12	PA22/NPCSB1	D12	PA18/SPCKB	G12	PA7/RXD0	K12	PB23/TIOB5
B1	NUB/NWR1	E1	A7	H1	A18	L1	D3
B2	PB0/NCS2	E2	VDDIO	H2	VDDIO	L2	D2
B3	VDDCORE	E3	A6	H3	A15	L3	D5
B4	NWE/NWR0	E4	A5	H4	A14	L4	D8
B5	VDDPLL	E5	GND	H5	A19	L5	VDDIO
B6	TDO	E6	GND	H6	GND	L6	D13
B7	VDDPLL	E7	GND	H7	GND	L7	PB8/TIOB0
B8	NWDOVF	E8	NTRST	H8	GND	L8	VDDIO
B9	PA26	E9	PA13/MOSIA	H9	PA6/TXD0	L9	PB17/TIOB3
B10	PA19/MISOB	E10	PA16/NPCSA2	H10	PA4/FIQ	L10	VDDCORE
B11	PA24/NPCSB3	E11	VDDIO	H11	VDDIO	L11	PB20/TIOB4
B12	PA23/NPCSB2	E12	PA17/NPCSA3	H12	PA5/SCK0	L12	PB22/TIOA5
C1	NLB/A0	F1	A8	J1	PB5/A23/CS4	M1	D4
C2	A1	F2	A12	J2	D0	M2	D6
C3	VDDIO	F3	A9	J3	PB4/A22/CS5	M3	D7
C4	NOE/NRD	F4	A10	J4	PB3/A21/CS6	M4	D11
C5	VDDIO	F5	GND	J5	PB2/A20/CS7	M5	D12
C6	NRST	F6	GND	J6	D15	M6	PB7/TIOA0
C7	TDI	F7	GND	J7	PB6/TCLK0	M7	PB12/TCLK2
C8	VDDIO	F8	GND	J8	PB10/TIOA1	M8	PB15/TCLK3
C9	PA27/BMS	F9	PA12/MISOA	J9	PA3/IRQ3	M9	PB14/TIOB2
C10	VDDIO	F10	PA15/NPCSA1	J10	PA2/IRQ2	M10	PB18/TCLK4
C11	VDDCORE	F11	PA11/SPCKA	J11	PA0/IRQ0	M11	PB19/TIOA4
C12	PA20/MOSIB	F12	PA14/NPCSA0	J12	PA1/IRQ1	M12	PB21/TCLK5

3. Pin Description

Table 3. AT91M42800A Pin Description

Module	Name	Function	Type	Active Level	Comments
EBI	A0 - A23	Address Bus	Output	–	All valid after reset
	D0 - D15	Data Bus	I/O	–	
	CS4 - CS7	Chip Select	Output	High	A23 - A20 after reset
	NCS0 - NCS3	Chip Select	Output	Low	
	NWR0	Lower Byte 0 Write Signal	Output	Low	Used in Byte Write option
	NWR1	Lower Byte 1 Write Signal	Output	Low	Used in Byte Write option
	NRD	Read Signal	Output	Low	Used in Byte Write option
	NWE	Write Enable	Output	Low	Used in Byte Select option
	NOE	Output Enable	Output	Low	Used in Byte Select option
	NUB	Upper Byte Select (16-bit SRAM)	Output	Low	Used in Byte Select option
	NLB	Lower Byte Select (16-bit SRAM)	Output	Low	Used in Byte Select option
	NWAIT	Wait Input	Input	Low	
	BMS	Boot Mode Select	Input	–	Sampled during reset
	PME	Protect Mode Enable	Input	High	PIO-controlled after reset
AIC	IRQ0 - IRQ3	External Interrupt Request	Input	–	PIO-controlled after reset
	FIQ	Fast External Interrupt Request	Input	–	PIO-controlled after reset
TC	TCLK0 - TCLK5	Timer External Clock	Input	–	PIO-controlled after reset
	TIOA0 - TIOA5	Multi-purpose Timer I/O Pin A	I/O	–	PIO-controlled after reset
	TIOB0 - TIOB5	Multi-purpose Timer I/O Pin B	I/O	–	PIO-controlled after reset
USART	SCK0 - SCK1	External Serial Clock	I/O	–	PIO-controlled after reset
	TXD0 - TXD1	Transmit Data Output	Output	–	PIO-controlled after reset
	RXD0 - RXD1	Receive Data Input	Input	–	PIO-controlled after reset
SPIA SPIB	SPCKA/SPCKB	Clock	I/O	–	PIO-controlled after reset
	MISOA/MISOB	Master In Slave Out	I/O	–	PIO-controlled after reset
	MOSIA/MOSIB	Master Out Slave In	I/O	–	PIO-controlled after reset
	NSSA/NSSB	Slave Select	Input	Low	PIO-controlled after reset
	NPCSA0 - NPCSA3 NPCSB0 - NPCSB3	Peripheral Chip Selects	Output	Low	PIO-controlled after reset
PIO	PA0 - PA29	Programmable I/O Port A	I/O	–	Input after reset
	PB0 - PB23	Programmable I/O Port B	I/O	–	Input after reset
ST	NWDOVF	Watchdog Timer Overflow	Output	Low	Open drain

Table 3. AT91M42800A Pin Description (Continued)

Module	Name	Function	Type	Active Level	Comments
CLOCK	XIN	Oscillator Input or External Clock	Input	–	
	XOUT	Oscillator Output	Output	–	
	PLLRCA	RC Filter for PLL A	Input	–	
	PLLRCB	RC Filter for PLL B	Input	–	
	MCKO	Clock Output	Output	–	
Test and Reset	NRST	Hardware Reset Input	Input	Low	Schmitt trigger
	MODE0 - MODE1	Mode Selection	Input		
JTAG/ICE	TMS	Test Mode Select	Input	–	Schmitt trigger, internal pull-up
	TDI	Test Data In	Input	–	Schmitt trigger, internal pull-up
	TDO	Test Data Out	Output	–	
	TCK	Test Clock	Input	–	Schmitt trigger, internal pull-up
	NTRST	Test Reset Input	Input	Low	Schmitt trigger, internal pull-up
Emulation	NTRI	Tri-state Mode Enable	Input	Low	Sampled during reset
Power	VDDIO	I/O Power	Power	–	3V or 5V nominal supply
	VDDCORE	Core Power	Power	–	3V nominal supply
	VDDPLL	PLL Power	Power	–	3V nominal supply
	GND	Ground	Ground	–	

4. Block Diagram

Figure 4-1. AT91M42800A

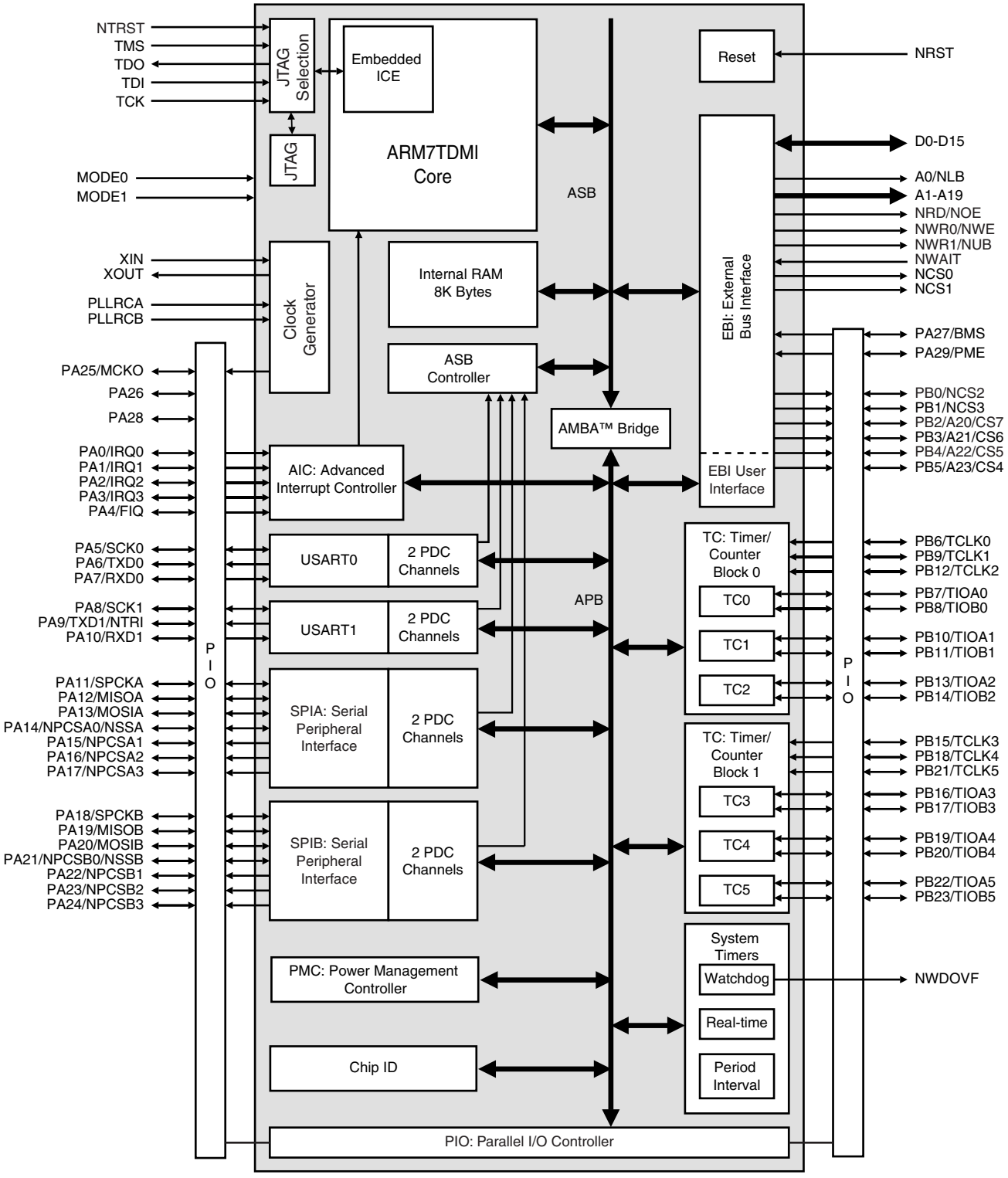

5. Architectural Overview

The AT91M42800A microcontroller integrates an ARM7TDMI with its embedded ICE interface, memories and peripherals. Its architecture consists of two main buses, the Advanced System Bus (ASB) and the Advanced Peripheral Bus (APB). Designed for maximum performance and controlled by the memory controller, the ASB interfaces the ARM7TDMI processor with the on-chip 32-bit memories, the External Bus Interface (EBI) and the AMBA™ Bridge. The AMBA Bridge drives the APB, which is designed for accesses to on-chip peripherals and optimized for low power consumption.

The AT91M42800A microcontroller implements the ICE port of the ARM7TDMI processor on dedicated pins, offering a complete, low-cost and easy-to-use debug solution for target debugging.

5.1 Memories

The AT91M42800A microcontroller embeds up to 8K bytes of internal SRAM. The internal memory is directly connected to the 32-bit data bus and is single-cycle accessible. This provides maximum performance of 30 MIPS at 33 MHz by using the ARM instruction set of the processor. The on-chip memory significantly reduces the system power consumption and improves its performance over external memory solutions.

The AT91M42800A microcontroller features an External Bus Interface (EBI), which enables connection of external memories and application-specific peripherals. The EBI supports 8- or 16-bit devices and can use two 8-bit devices to emulate a single 16-bit device. The EBI implements the early read protocol, enabling single clock cycle memory accesses two times faster than standard memory interfaces.

5.2 Peripherals

The AT91M42800A microcontroller integrates several peripherals, which are classified as system or user peripherals. All on-chip peripherals are 32-bit accessible by the AMBA Bridge, and can be programmed with a minimum number of instructions. The peripheral register set is composed of control, mode, data, status and enable/disable/status registers.

An on-chip Peripheral Data Controller (PDC) transfers data between the on-chip USARTs/SPIs and the on- and off-chip memories without processor intervention. Most importantly, the PDC removes the processor interrupt handling overhead and significantly reduces the number of clock cycles required for a data transfer. It can transfer up to 64K continuous bytes without reprogramming the start address. As a result, the performance of the microcontroller is increased and the power consumption reduced.

5.2.1 System Peripherals

The External Bus Interface (EBI) controls the external memory and peripheral devices via an 8- or 16-bit data bus and is programmed through the APB. Each chip select line has its own programming register.

The Power Management Controller (PMC) optimizes power consumption of the product by controlling the clocking elements such as the oscillator and the PLLs, system and user peripheral clocks.

The Advanced Interrupt Controller (AIC) controls the internal sources from the internal peripherals and the five external interrupt lines (including the FIQ) to provide an interrupt and/or fast

interrupt request to the ARM7TDMI. It integrates an 8-level priority controller, and, using the Auto-vectoring feature, reduces the interrupt latency time.

The Parallel Input/Output Controllers (PIOA, PIOB) controls up to 54 I/O lines. It enables the user to select specific pins for on-chip peripheral input/output functions, and general-purpose input/output signal pins. The PIO controllers can be programmed to detect an interrupt on a signal change from each line.

There are three embedded system timers. The Real-time Timer (RTT) counts elapsed seconds and can generate periodic or programmed interrupts. The Period Interval Timer (PIT) can be used as a user-programmable time-base, and can generate periodic ticks. The Watchdog (WD) can be used to prevent system lock-up if the software becomes trapped in a deadlock.

The Special Function (SF) module integrates the Chip ID and the Reset Status registers.

5.2.2 User Peripherals

Two USARTs, independently configurable, enable communication at a high baud rate in synchronous or asynchronous mode. The format includes start, stop and parity bits and up to 9 data bits. Each USART also features a Time-out and a Time-guard register, facilitating the use of the two dedicated Peripheral Data Controller (PDC) channels.

The two 3-channel, 16-bit Timer/Counters (TC) are highly-programmable and support capture or waveform modes. Each TC channel can be programmed to measure or generate different kinds of waves, and can detect and control two input/output signals. Each TC also has three external clock signals.

Two independently configurable SPIs provide communication with external devices in master or slave mode. Each has four external chip selects which can be connected to up to 15 devices. The data length is programmable, from 8- to 16-bit.

6. Associated Documentation

Table 6-1. Associated Documentation

Information	Document Title
Internal architecture of processor ARM/Thumb instruction sets Embedded in-circuit-emulator	ARM7TDMI (Thumb) Datasheet
External memory interface mapping Peripheral operations Peripheral user interfaces	AT91M42800A Datasheet (this document)
DC characteristics Power consumption Thermal and reliability chonsiderations AC characteristics	AT91M42800A Electrical Characteristics Datasheet
Product overview Ordering information Packaging information Soldering profile	AT91M42800A Summary Datasheet

7. Product Overview

7.1 Power Supply

The AT91M42800A has three kinds of power supply pins:

- VDDCORE pins that power the chip core
- VDDIO pins that power the I/O lines
- VDDPLL pins that power the oscillator and PLL cells

VDDCORE and VDDIO pins allow core power consumption to be reduced by supplying it with a lower voltage than the I/O lines. The VDDCORE pins must never be powered at a voltage greater than the supply voltage applied to the VDDIO.

The VDDPLL pin is used to supply the oscillator and both PLLs. The voltage applied on these pins is typically 3.3V, and it must not be lower than VDDCORE.

Typical supported voltage combinations are shown in the following table:

Table 1.

Pins	Nominal Supply Voltages	
VDDCORE	3.3V	3.0V or 3.3V
VDDIO	5.0V	3.0V or 3.3V
VDDPLL	3.3V	3.0V or 3.3V

7.2 Input/Output Considerations

After the reset, the peripheral I/Os are initialized as inputs to provide the user with maximum flexibility. It is recommended that in any application phase, the inputs to the AT91M42800A microcontroller be held at valid logic levels to minimize the power consumption.

7.3 Operating Modes

The AT91M42800A has two pins dedicated to defining MODE0 and MODE1 operating modes. These pins allow the user to enter the device in Boundary Scan mode. They also allow the user to run the processor from the on-chip oscillator output and from an external clock by bypassing the on-chip oscillator. The last mode is reserved for test purposes. A chip reset must be performed (NRST and NTRST) after MODE0 and/or MODE1 have been changed.

Table 7-1.

MODE0	MODE1	Operating Mode
0	0	Normal operating mode by using the on-chip oscillator
0	1	Boundary Scan Mode
1	0	Normal operating mode by using an external clock on XIN
1	1	Reserved for test

Warning: The user must take the external oscillator frequency into account so that it is consistent with the minimum access time requested by the memory device used at the boot. Both the default EBI setting (zero wait state) on Chip Select 0 (See "Boot on NCS0" on page 29) and the minimum access time of the boot memory are two parameters that determine this maximum frequency of the external oscillator.

7.4 Clock Generator

The AT91M42800A microcontroller embeds a 32.768 kHz oscillator that generates the Slow Clock (SLCK). This on-chip oscillator can be bypassed by setting the correct logical level on the MODE0 and MODE1 pins, as shown above. In this case, SLCK equals XIN.

The AT91M42800A microcontroller has a fully static design and works either on the Master Clock (MCK), generated from the Slow Clock by means of the two integrated PLLs, or on the Slow Clock (SLCK).

These clocks are also provided as an output of the device on the pin MCKO, which is multiplexed with a general-purpose I/O line. While NRST is active, and after the reset, the MCKO is valid and outputs an image of the SLCK signal. The PIO Controller must be programmed to use this pin as standard I/O line.

7.5 Reset

Reset initializes the user interface registers to their default states as defined in the peripheral sections of this datasheet and forces the ARM7TDMI to perform the next instruction fetch from address zero. Except for the program counter, the ARM core registers do not have defined reset states. When reset is active, the inputs of the AT91M42800A must be held at valid logic levels. The EBI address lines drive low during reset. All the peripheral clocks are disabled during reset to save power.

7.5.1 NRST Pin

NRST is the active low reset input. It is asserted asynchronously, but exit from reset is synchronized internally to the slow clock (SLCK). At power-up, NRST must be active until the on-chip oscillator is stable. During normal operation, NRST must be active for a minimum of 10 SLCK clock cycles to ensure correct initialization.

The pins BMS and NTRI are sampled during the 10 SLCK clock cycles just prior to the rising edge of NRST.

The NRST pin has no effect on the on-chip Embedded ICE logic.

7.5.2 NTRST Pin

The NTRST control pin initializes the selected TAP controller. The TAP controller involved in this reset is determined according to the initial logical state applied on the JTAGSEL pin after the last valid NRST.

In either Boundary Scan or ICE Mode, a reset can be performed from the same or different circuitry, as shown in Figure 7-1 below. But in all cases, the NTRST like the NRST signal, must be asserted after each power-up. (See the AT91M42800A Electrical Datasheet, Atmel Lit. No. 1776, for the necessary minimum pulse assertion time.)

Figure 7-1. Separate or Common Reset Management

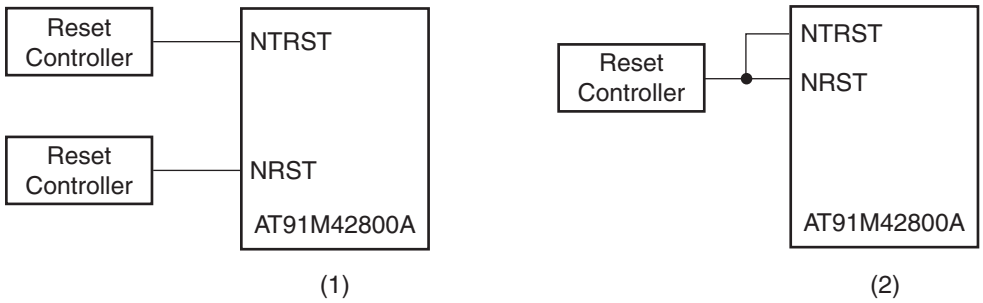

Notes: 1. NRST and NTRST handling in Debug Mode during development.
2. NRST and NTRST handling during production.

In order to benefit from the separation of NRST and NTRST during the debug phase of development, the user must independently manage both signals as shown in example (1) of Figure 7-1 above. However, once debug is completed, both signals are easily managed together during production as shown in example (2) of Figure 7-1 above.

7.5.3 Watchdog Reset

The internally generated watchdog reset has the same effect as the NRST pin, except that the pins BMS and NTRI are not sampled. Boot mode and Tri-state mode are not updated. The NRST pin has priority if both types of reset coincide.

7.6 Emulation Functions

7.6.1 Tri-state Mode

The AT91M42800A provides a Tri-state mode, which is used for debug purposes in order to connect an emulator probe to an application board. In Tri-state mode the AT91M42800A continues to function, but all the output pin drivers are tri-stated.

To enter Tri-state mode, the pin NTRI must be held low during the last 10 SLCK clock cycles before the rising edge of NRST. For normal operation, the pin NTRI must be held high during reset, by a resistor of up to 400 kΩ. NTRI must be driven to a valid logic value during reset.

NTRI is multiplexed with Parallel I/O PA9 and USART 1 serial data transmit line TXD1.

Standard RS232 drivers generally contain internal 400 kΩ pull-up resistors. If TXD1 is connected to one of these drivers, this pull-up will ensure normal operation, without the need for an additional external resistor.

7.6.2 Embedded ICE

ARM standard embedded in-circuit emulation is supported via the JTAG/ICE port. It is connected to a host computer via an embedded ICE Interface.

Embedded ICE mode is selected when MODE1 is low.

It is not possible to switch directly between ICE and JTAG operations. A chip reset must be performed (NRST and NTRST) after MODE0 and/or MODE1 have/has been changed. The reset input to the embedded ICE (NTRST) is provided separately to facilitate debug of boot programs.

7.6.3 IEEE 1149.1 JTAG Boundary Scan

IEEE 1149.1 JTAG Boundary Scan is enabled when MODE0 is low and MODE1 is high. The functions SAMPLE, EXTEST and BYPASS are implemented. In ICE Debug mode, the ARM core responds with a non-JTAG chip ID that identifies the core to the ICE system. This is not IEEE 1149.1 JTAG compliant. It is not possible to switch directly between JTAG and ICE operations. A chip reset must be performed (NRST and NTRST) after MODE0 and/or MODE1 have/has been changed.

7.7 Memory Controller

The ARM7TDMI processor address space is 4G bytes. The memory controller decodes the internal 32-bit address bus and defines three address spaces:

- Internal Memories in the four lowest megabytes
- Middle Space reserved for the external devices (memory or peripherals) controlled by the EBI
- Internal Peripherals in the four highest megabytes

In any of these address spaces, the ARM7TDMI operates in little-endian mode only.

7.7.1 Protection Mode

The embedded peripherals can be protected against unwanted access. The PME (Protect Mode Enable) pin must be tied high and validated in its peripheral operation (PIO Disable) to enable the protection mode. When enabled, any peripheral access must be done while the ARM7TDMI is running in Privileged mode (i.e., the accesses in user mode result in an abort). Only the valid peripheral address space is protected and requests to the undefined addresses will lead to a normal operation without abort.

7.7.2 Internal Memories

The AT91M42800A microcontroller integrates an 8-Kbyte primary internal SRAM. All internal memories are 32 bits wide and single-clock cycle accessible. Byte (8-bit), half-word (16-bit) or word (32-bit) accesses are supported and are executed within one cycle. Fetching Thumb or ARM instructions is supported and internal memory can store twice as many Thumb instructions as ARM ones.

The SRAM bank is mapped at address 0x0 (after the remap command), and ARM7TDMI exception vectors between 0x0 and 0x20 that can be modified by the software. The rest of the

bank can be used for stack allocation (to speed up context saving and restoring), or as data and program storage for critical algorithms.

7.7.3 Boot Mode Select

The ARM reset vector is at address 0x0. After the NRST line is released, the ARM7TDMI executes the instruction stored at this address. This means that this address must be mapped in non-volatile memory after the reset.

The input level on the BMS pin during the last 10 SLCK clock cycles before the rising edge of the NRST selects the type of boot memory. The Boot mode depends on BMS (see Table 7-2).

The pin BMS is multiplexed with the I/O line PA27 that can be programmed after reset like any standard PIO line.

Table 7-2. Boot Mode Select

BMS	Boot Memory
1	External 8-bit memory NCS0
0	External 16-bit memory on NCS0

7.7.4 Remap Command

The ARM vectors (Reset, Abort, Data Abort, Prefetch Abort, Undefined Instruction, Interrupt, Fast Interrupt) are mapped from address 0x0 to address 0x20. In order to allow these vectors to be redefined dynamically by the software, the AT91M42800A microcontroller uses a remap command that enables switching between the boot memory and the internal SRAM bank addresses. The remap command is accessible through the EBI User Interface, by writing one in RCB of EBI_RCR (Remap Control Register). Performing a remap command is mandatory if access to the other external devices (connected to chip selects 1 to 7) is required. The remap operation can only be changed back by an internal reset or an NRST assertion.

Notes: 1. NIRQ de-assertion and automatic interrupt clearing if the source is programmed as level sensitive.

7.7.5 Abort Control

The abort signal providing a Data Abort or a Prefetch Abort exception to the ARM7TDMI is asserted in the following cases:

- When accessing an undefined address in the EBI address space
- When the ARM7TDMI performs a misaligned access

No abort is generated when reading the internal memory or by accessing the internal peripherals, whether the address is defined or not.

When the processor performs a forbidden write access in a mode-protected peripheral register, the write is cancelled but no abort is generated.

The processor can perform word or half-word data access with a misaligned address when a register relative load/store instruction is executed and the register contains a misaligned address. In this case, whether the access is in write or in read, an abort is generated but the access is not cancelled.

The Abort Status Register traces the source that caused the last abort. The address and the type of abort are stored in registers of the External Bus Interface.

7.8 External Bus Interface

The External Bus Interface handles the accesses between addresses 0x0040 0000 and 0xFFC0 0000. It generates the signals that control access to the external devices, and can be configured from eight 1-Mbyte banks up to four 16-Mbyte banks. In all cases it supports byte, half-word and word aligned accesses.

For each of these banks, the user can program:

- Number of wait states
- Number of data float times (wait time after the access is finished to prevent any bus contention in case the device takes too long in releasing the bus)
- Data bus width (8-bit or 16-bit)
- With a 16-bit wide data bus, the user can program the EBI to control one 16-bit device (Byte Access Select mode) or two 8-bit devices in parallel that emulate a 16-bit memory (Byte Write Access mode).

The External Bus Interface features also the Early Read Protocol, configurable for all the devices, that significantly reduces access time requirements on an external device.

8. Peripherals

The AT91M42800A peripherals are connected to the 32-bit wide Advanced Peripheral Bus. Peripheral registers are only word accessible. Byte and half-word accesses are not supported. If a byte or a half-word access is attempted, the memory controller automatically masks the lowest address bits and generates a word access.

Each peripheral has a 16-Kbyte address space allocated (the AIC only has a 4-Kbyte address space).

8.0.1 Peripheral Registers

The following registers are common to all peripherals:

- Control Register – Write-only register that triggers a command when a one is written to the corresponding position at the appropriate address. Writing a zero has no effect.
- Mode Register – read/write register that defines the configuration of the peripheral. Usually has a value of 0x0 after a reset.
- Data Registers – read and/or write register that enables the exchange of data between the processor and the peripheral.
- Status Register – Read-only register that returns the status of the peripheral.
- Enable/Disable/Status Registers are shadow command registers. Writing a one in the Enable Register sets the corresponding bit in the Status Register. Writing a one in the Disable Register resets the corresponding bit and the result can be read in the Status Register. Writing a bit to zero has no effect. This register access method maximizes the efficiency of bit manipulation, and enables modification of a register with a single non-interruptible instruction, replacing the costly read-modify-write operation.

Unused bits in the peripheral registers are shown as “–” and must be written at 0 for upward compatibility. These bits read 0.

8.0.2 Peripheral Interrupt Control

The Interrupt Control of each peripheral is controlled from the status register using the interrupt mask. The status register bits are ANDed to their corresponding interrupt mask bits and

the result is then ORed to generate the Interrupt Source signal to the Advanced Interrupt Controller.

The interrupt mask is read in the Interrupt Mask Register and is modified with the Interrupt Enable Register and the Interrupt Disable Register. The enable/disable/status (or mask) makes it possible to enable or disable peripheral interrupt sources with a non-interruptible single instruction. This eliminates the need for interrupt masking at the AIC or Core level in real-time and multi-tasking systems.

8.0.3 Peripheral Data Controller

The AT91M42800A has an 8-channel PDC dedicated to the two on-chip USARTs and to the two on-chip SPIs. One PDC channel is connected to the receiving channel and one to the transmitting channel of each peripheral.

The user interface of a PDC channel is integrated in the memory space of each USART channel and in the memory space of each SPI. It contains a 32-bit address pointer register and a 16-bit count register. When the programmed data is transferred, an end-of-transfer interrupt is generated by the corresponding peripheral. See Section 17. ”USART: Universal Synchronous/Asynchronous Receiver/Transmitter” on page 121 and Section 19. ”SPI: Serial Peripheral Interface” on page 177 for more details on PDC operation and programming.

8.1 System Peripherals

8.1.1 PMC: Power Management Controller

The AT91M42800A’s Power Management Controller optimizes the power consumption of the device. The PMC controls the clocking elements such as the oscillator and the PLLs, and the System and the Peripheral Clocks. It also controls the MCKO pin and permits to the user to select four different signals to be driven on this pin.

The AT91M42800A has the following clock elements:

- The oscillator providing a clock that depends on the crystal fundamental frequency connected between the XIN and XOUT pins
- PLL A providing a low-to-middle frequency clock range
- PLL B providing a middle-to-high frequency range
- The Clock prescaler
- The ARM Processor Clock controller
- The Peripheral Clock controller
- The Master Clock Output controller

The on-chip low-power oscillator together with the PLL-based frequency multiplier and the prescaler results in a programmable clock between 500 Hz and 66 MHz. It is the responsibility of the user to make sure that the PMC programming does not result in a clock over the acceptable limits.

8.1.2 ST: System Timer

The System Timer module integrates three different free-running timers:

- A Period Interval Timer setting the base time for an Operating System.

- A Watchdog Timer that is built around a 16-bit counter, and is used to prevent system lock-up if the software becomes trapped in a deadlock. It can generate an internal reset or interrupt, or assert an active level on the dedicated pin NWDOVF.
- A Real-time Timer counting elapsed seconds.

These timers count using the Slow Clock. Typically, this clock has a frequency of 32768 Hz.

8.1.3 AIC: Advanced Interrupt Controller

The AT91M42800A has an 8-level priority, individually maskable, vectored interrupt controller. This feature substantially reduces the software and real-time overhead in handling internal and external interrupts.

The interrupt controller is connected to the NFIQ (fast interrupt request) and the NIRQ (standard interrupt request) inputs of the ARM7TDMI processor. The processor's NFIQ line can only be asserted by the external fast interrupt request input: FIQ. The NIRQ line can be asserted by the interrupts generated by the on-chip peripherals and the external interrupt request lines: IRQ0 to IRQ3.

The 8-level priority encoder allows the customer to define the priority between the different NIRQ interrupt sources.

Internal sources are programmed to be level sensitive or edge triggered. External sources can be programmed to be positive or negative edge triggered or high- or low-level sensitive.

8.1.4 PIO: Parallel I/O Controller

The AT91M42800A has 54 programmable I/O lines. I/O lines are multiplexed with an external signal of a peripheral to optimize the use of available package pins. These lines are controlled by two separate and identical PIO Controllers called PIOA and PIOB. Each PIO controller also provides an internal interrupt signal to the Advanced Interrupt Controller and insertion of a simple input glitch filter on any of the PIO pins.

8.1.5 SF: Special Function

The AT91M42800A provides registers that implement the following special functions.

- Chip Identification
- RESET Status

8.2 User Peripherals

8.2.1 USART: Universal Synchronous/ Asynchronous Receiver Transmitter

The AT91M42800A provides two identical, full-duplex, universal synchronous/asynchronous receiver/transmitters that interface to the APB and are connected to the Peripheral Data Controller.

The main features are:

- Programmable Baud Rate Generator with External or Internal Clock, as well as Slow Clock
- Parity, Framing and Overrun Error Detection
- Line Break Generation and Detection
- Automatic Echo, Local Loopback and Remote Loopback channel modes
- Multi-drop mode: Address Detection and Generation

- Interrupt Generation
- Two Dedicated Peripheral Data Controller channels
- 5-, 6-, 7-, 8- and 9-bit character length

8.2.2 TC: Timer/Counter

The AT91M42800A features two Timer/Counter blocks, each containing three identical 16-bit Timer/Counter channels. Each channel can be independently programmed to perform a wide range of functions including frequency measurement, event counting, interval measurement, pulse generation, delay timing and pulse-width modulation.

Each Timer/Counter (TC) channel has 3 external clock inputs, 5 internal clock inputs, and 2 multi-purpose input/output signals that can be configured by the user. Each channel drives an internal interrupt signal that can be programmed to generate processor interrupts via the AIC (Advanced Interrupt Controller).

The Timer/Counter block has two global registers that act upon all three TC channels. The Block Control Register allows the three channels to be started simultaneously with the same instruction. The Block Mode Register defines the external clock inputs for each Timer/Counter channel, allowing them to be chained.

Each Timer/Counter block operates independently and has a complete set of block and channel registers.

8.2.3 SPI: Serial Peripheral Interface

The AT91M42800A includes two SPIs that provide communication with external devices in Master or Slave mode. They are independent, and are referred to by the letters A and B. Each SPI has four external chip selects that can be connected to up to 15 devices. The data length is programmable from 8- to 16-bit.

9. Memory Map

Figure 9-1. AT91M42800A Memory Map before Remap Command

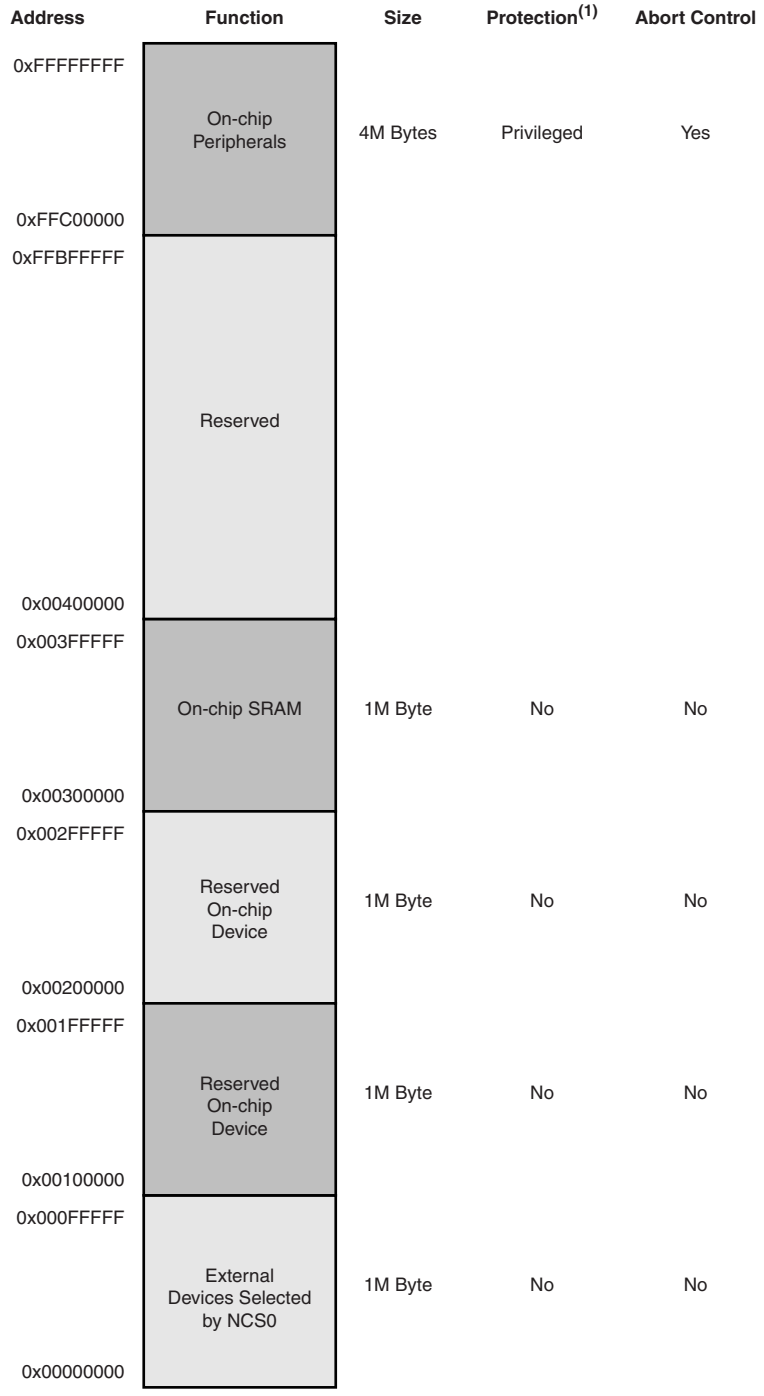

Note: 1. The ARM core modes are defined in the ARM7TDMI Datasheet. Privileged is a non-user mode. The protection is active only if Protect mode is enabled.

Figure 9-2. AT91M42800A Memory Map after Remap Command

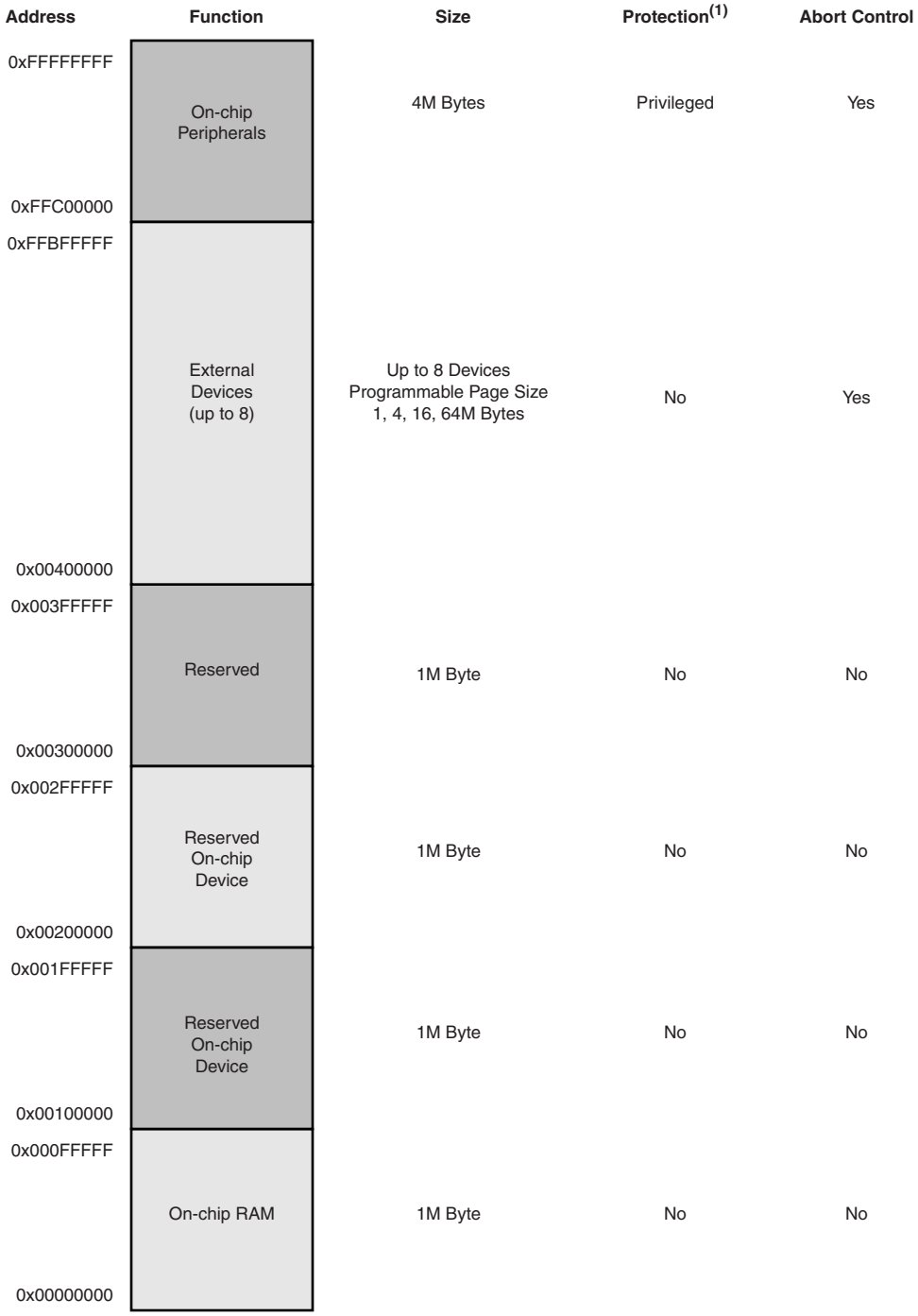

Note: 1. The ARM core modes are defined in the ARM7TDMI Datasheet. Privileged is a non-user mode. The protection is active only if Protect mode is enabled.

10. Peripheral Memory Map

Figure 10-1. AT91M42800A Peripheral Memory Map

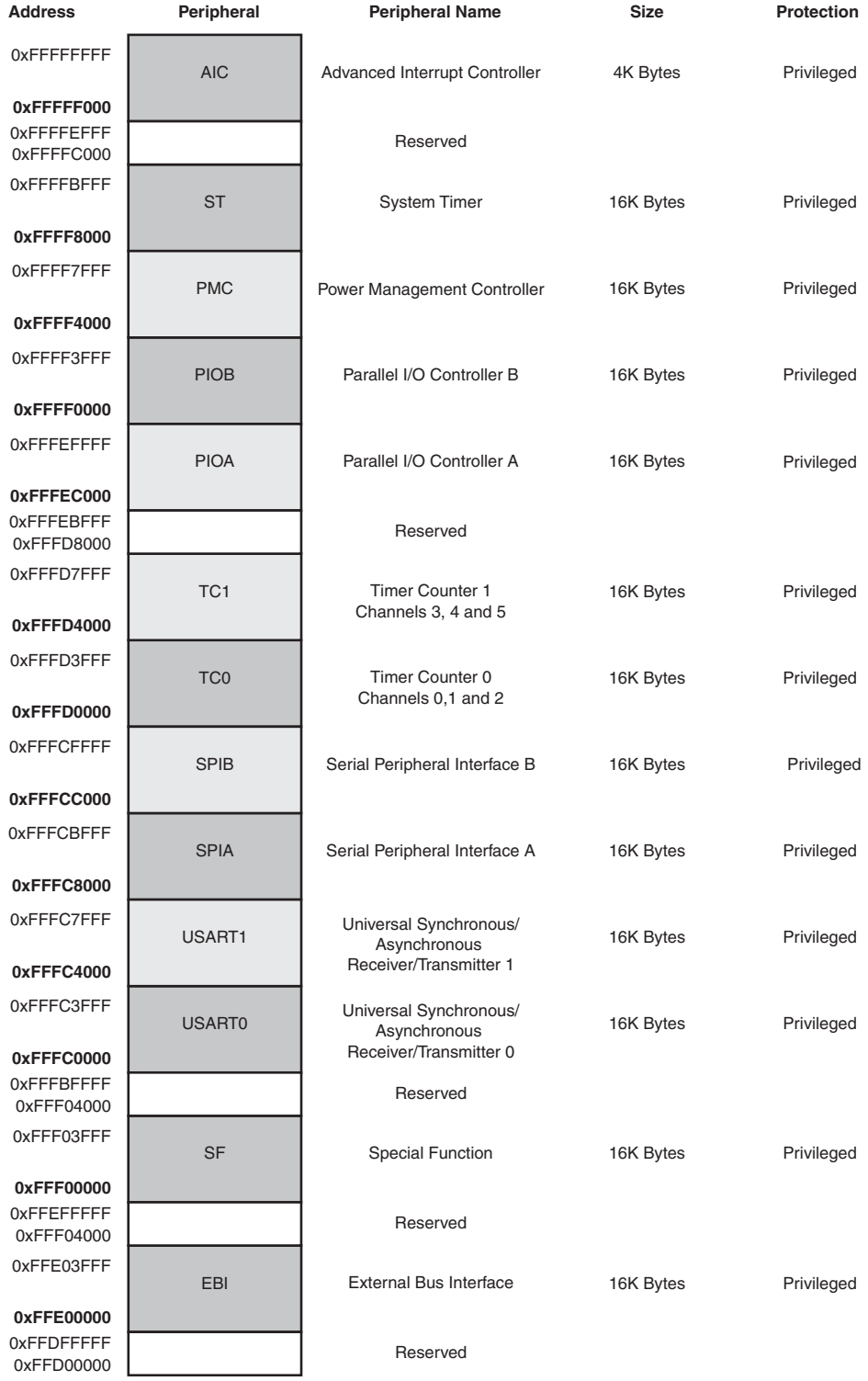

Note: 1. The ARM core modes are defined in the ARM7TDMI Datasheet. Privileged is a non-user mode. The protection is active only if Protect mode is enabled.

11. EBI: External Bus Interface

The EBI handles the access requests performed by the ARM core or the PDC. It generates the signals that control the access to the external memory or peripheral devices. The EBI is fully programmable and can address up to 64M bytes. It has eight chip selects and a 24-bit address bus, the upper four bits of which are multiplexed with a chip select.

The 16-bit data bus can be configured to interface with 8- or 16-bit external devices. Separate read and write control signals allow for direct memory and peripheral interfacing.

The EBI supports different access protocols allowing single clock cycle memory accesses.

The main features are:

- External memory mapping
- Up to 8 chip select lines
- 8- or 16-bit data bus
- Byte write or byte select lines
- Remap of boot memory
- Two different read protocols
- Programmable wait state generation
- External wait request
- Programmable data float time

The EBI User Interface is described on page 48.

11.1 External Memory Mapping

The memory map associates the internal 32-bit address space with the external 24-bit address bus.

The memory map is defined by programming the base address and page size of the external memories (see registers EBI_CSR0 to EBI_CSR7 in Section 11.13 ”EBI User Interface” on page 48). Note that A0 - A23 is only significant for 8-bit memory; A1 - A23 is used for 16-bit memory.

If the physical memory device is smaller than the programmed page size, it wraps around and appears to be repeated within the page. The EBI correctly handles any valid access to the memory device within the page (see Figure 11-1 on page 24).

In the event of an access request to an address outside any programmed page, an abort signal is generated. Two types of abort are possible: instruction prefetch abort and data abort. The corresponding exception vector addresses are 0x0000000C and 0x00000010, respectively. It is up to the system programmer to program the error handling routine to use in case of an abort (see the ARM7TDMI datasheet for further information).

The chip selects can be defined to the same base address and an access to the overlapping address space asserts both NCS lines. The Chip Select Register, having the smaller number, defines the characteristics of the external access and the behaviour of the control signals.

Figure 11-1. External Memory Smaller than Page Size

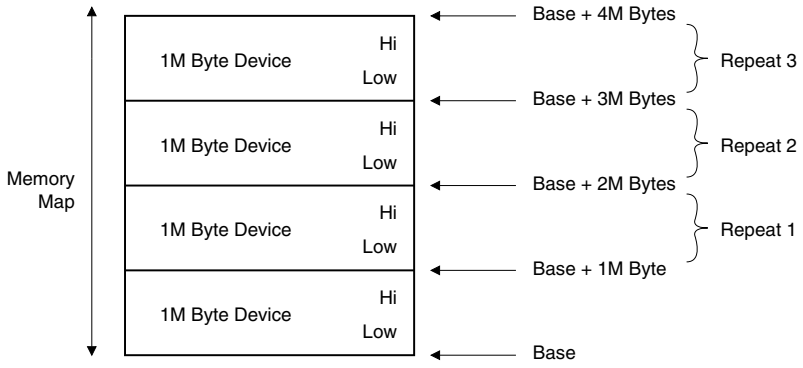

11.2 Abort Status

When an abort is generated, the EBI_AASR (Abort Address Status Register) and the EBI_ASR (Abort Status Register) provide the details of the source causing the abort. Only the last abort is saved and registers are left in the last abort status. After the reset, the registers are initialized to 0.

The following are saved:

In EBI_AASR:

- The address at which the abort is generated

In EBI_ASR:

- Whether or not the processor has accessed an undefined address in the EBI address space
- Whether or not the processor required an access at a misaligned address
- The size of the access (byte, word or half-word)
- The type of the access (read, write or code fetch)

11.3 EBI Behavior During Internal Accesses

When the ARM core performs accesses in the internal memories or the embedded peripherals, the EBI signals behave as follows:

- The address lines remain at the level of the last external access.
- The data bus is tri-stated.
- The control signals remain in an inactive state.

11.4 Pin Description

Table 11-1. External Bus Interface Pin Description

Name	Description	Type
A0 - A23	Address bus	Output
D0 - D15	Data bus	I/O
NCS0 - NCS3	Active low chip selects	Output
CS4 - CS7	Active high chip selects	Output
NRD	Read Enable	Output
NWR0 - NWR1	Lower and upper write enable	Output
NOE	Output enable	Output
NWE	Write enable	Output
NUB, NLB	Upper and lower byte select	Output
NWAIT	Wait request	Input
PME	Protection Mode Enabled	Input

Table 11-2. EBI Multiplexed Signals

Multiplexed Signals		Functions
A23 - A20	CS4 - CS7	Allows from 4 to 8 chip select lines to be used
A0	NLB	8- or 16-bit data bus
NRD	NOE	Byte-write or byte select access
NWR0	NWE	Byte-write or byte select access
NWR1	NUB	Byte-write or byte select access

11.5 Chip Select Lines

The EBI provides up to eight chip select lines:

- Chip select lines NCS0 - NCS3 are dedicated to the EBI (not multiplexed).
- Chip select lines CS4 - CS7 are multiplexed with the top four address lines A23 - A20.

By exchanging address lines for chip select lines, the user can optimize the EBI to suit the external memory requirements: more external devices or larger address range for each device.

The selection is controlled by the ALE field in EBI_MCR (Memory Control Register). The following combinations are possible:

A20, A21, A22, A23 (configuration by default)
A20, A21, A22, CS4
A20, A21, CS5, CS4
A20, CS6, CS5, CS4
CS7, CS6, CS5, CS4

Figure 11-2. Memory Connections for Four External Devices[1]

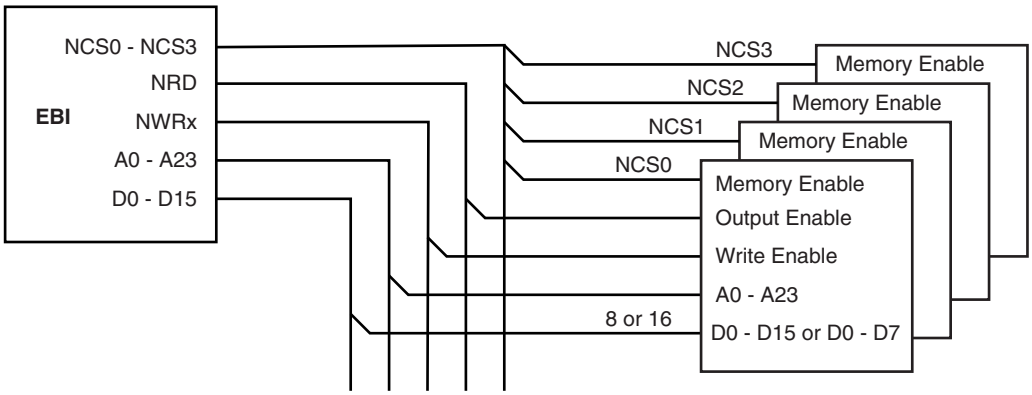

Notes: 1. For four external devices, the maximum address space per device is 16M bytes.

Figure 11-3. Memory Connections for Eight External Devices[1]

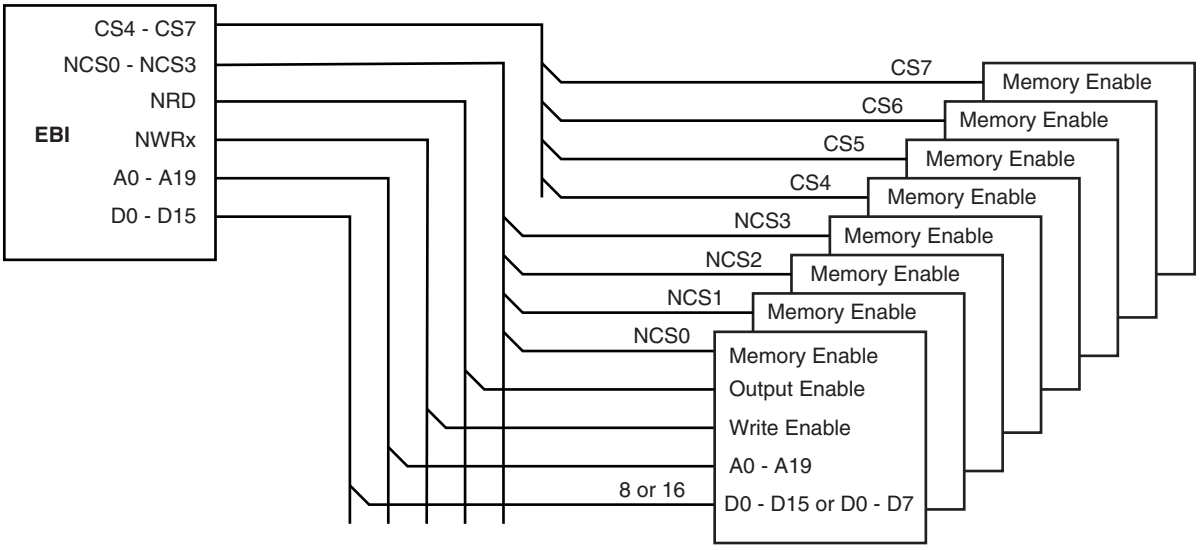

Notes: 1. For eight external devices, the maximum address space per device is 1M byte.

11.6 Data Bus Width

A data bus width of 8 or 16 bits can be selected for each chip select. This option is controlled by the DBW field in the EBI_CSR (Chip Select Register) for the corresponding chip select.

Figure 11-4 shows how to connect a 512K x 8-bit memory on NCS2.

Figure 11-4. Memory Connection for an 8-bit Data Bus

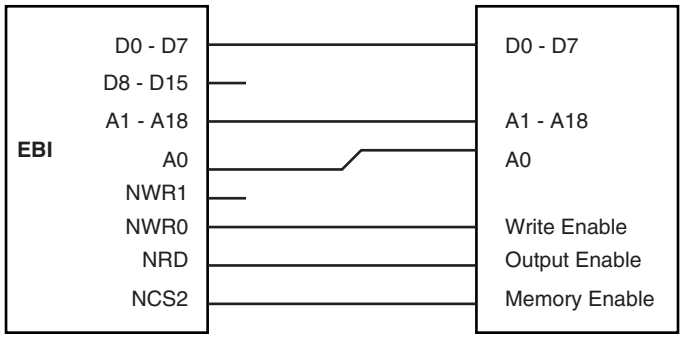

Figure 11-5 shows how to connect a 512K x 16-bit memory on NCS2.

Figure 11-5. Memory Connection for a 16-bit Data Bus

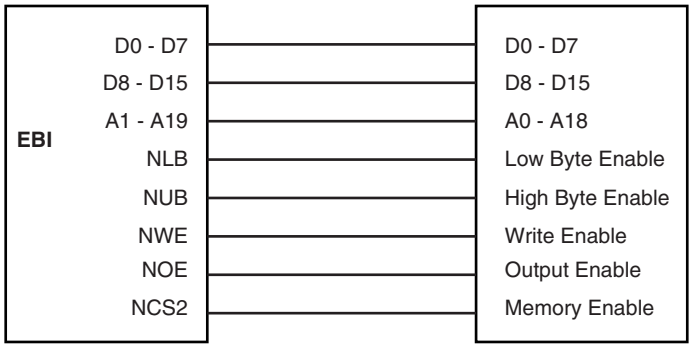

11.7 Byte Write or Byte Select Access

Each chip select with a 16-bit data bus can operate with one of two different types of write access:

- Byte Write Access supports two byte write and a single read signal.
- Byte Select Access selects upper and/or lower byte with two byte select lines, and separate read and write signals.

This option is controlled by the BAT field in the EBI_CSR (Chip Select Register) for the corresponding chip select.

Byte Write Access is used to connect 2 x 8-bit devices as a 16-bit memory page.

- The signal A0/NLB is not used.
- The signal NWR1/NUB is used as NWR1 and enables upper byte writes.
- The signal NWR0/NWE is used as NWR0 and enables lower byte writes.
- The signal NRD/NOE is used as NRD and enables half-word and byte reads.

Figure 11-6 shows how to connect two 512K x 8-bit devices in parallel on NCS2.

Figure 11-6. Memory Connection for 2 x 8-bit Data Buses

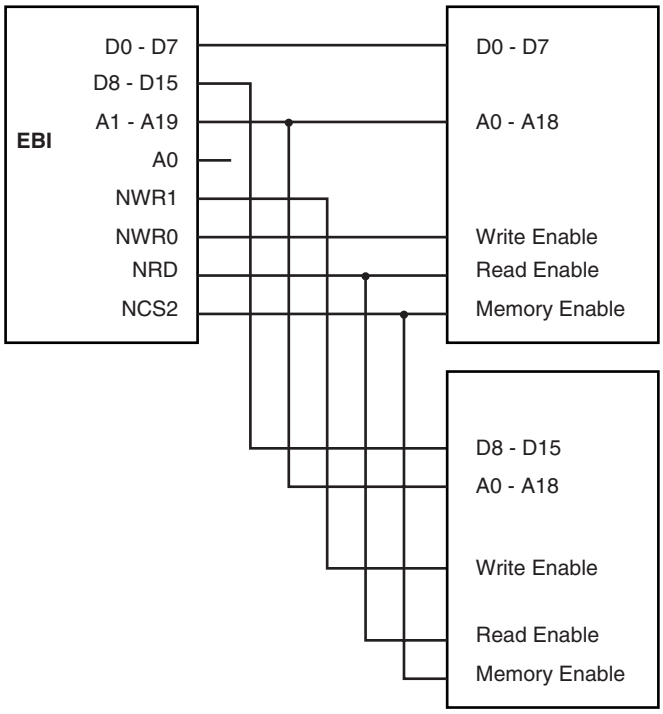

Byte Select Access is used to connect 16-bit devices in a memory page.

- The signal A0/NLB is used as NLB and enables the lower byte for both read and write operations.
- The signal NWR1/NUB is used as NUB and enables the upper byte for both read and write operations.
- The signal NWR0/NWE is used as NWE and enables writing for byte or half-word.
- The signal NRD/NOE is used as NOE and enables reading for byte or half-word.

Figure 11-7 shows how to connect a 16-bit device with byte and half-word access (e.g., 16-bit SRAM) on NCS2.

Figure 11-7. Connection for a 16-bit Data Bus with Byte and Half-word Access

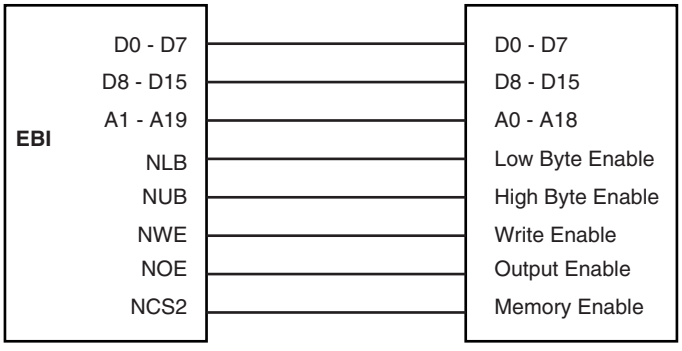

Figure 11-8 shows how to connect a 16-bit device without byte access (e.g., Flash) on NCS2.

Figure 11-8. Connection for a 16-bit Data Bus without Byte Write Capability

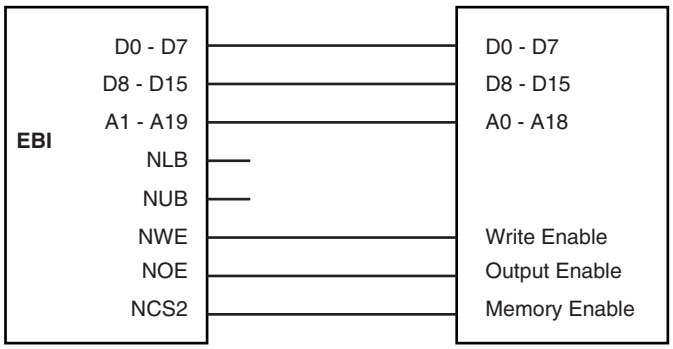

11.8 Boot on NCS0

Depending on the device and the BMS pin level during the reset, the user can select either an 8-bit or 16-bit external memory device connected on NCS0 as the Boot memory. In this case, EBI_CSR0 (Chip Select Register 0) is reset at the following configuration for chip select 0:

- 8 wait states (WSE = 0 - wait states disabled)
- 8-bit or 16-bit data bus width, depending on BMS

Byte access type and number of data float time are set to Byte Write Access and 0, respectively.

Before the remap command, the user can modify the chip select 0 configuration, programming the EBI_CSR0 with the exact Boot memory characteristics. The base address becomes effective after the remap command.

Warning: In the internal oscillator bypass mode described in ”Operating Modes” on page 12, the user must take the external oscillator frequency into account according to the minimum access time on the boot memory device.

As illustration, the following table gives examples of oscillator frequency limits according to the time access without using NWAIT pin at the boot.

Chip Select Assertion to Output Data Valid Maximum Delay in Read Cycle (t_{CE} in ns)	External Oscillator Frequency Limit (MHz)
110	7
90	9
70	11
55	14
25	24

Note: Values take only t_{CE} into account.

11.9 Read Protocols

The EBI provides two alternative protocols for external memory read access: standard and early read. The difference between the two protocols lies in the timing of the NRD (read cycle) waveform.

The protocol is selected by the DRP field in EBI_MCR (Memory Control Register) and is valid for all memory devices. Standard read protocol is the default protocol after reset.

Note: In the following waveforms and descriptions, **NRD** represents NRD and NOE since the two signals have the same waveform. Likewise, **NWE** represents NWE, NWR0 and NWR1 unless NWR0 and NWR1 are otherwise represented. **ADDR** represents A0 - A23 and/or A1 - A23.

11.9.1 Standard Read Protocol

Standard read protocol implements a read cycle in which NRD and NWE are similar. Both are active during the second half of the clock cycle. The first half of the clock cycle allows time to ensure completion of the previous access as well as the output of address and NCS before the read cycle begins.

During a standard read protocol, external memory access, NCS is set low and ADDR is valid at the beginning of the access while NRD goes low only in the second half of the master clock cycle to avoid bus conflict (see Figure 11-9).

Figure 11-9. Standard Read Protocol

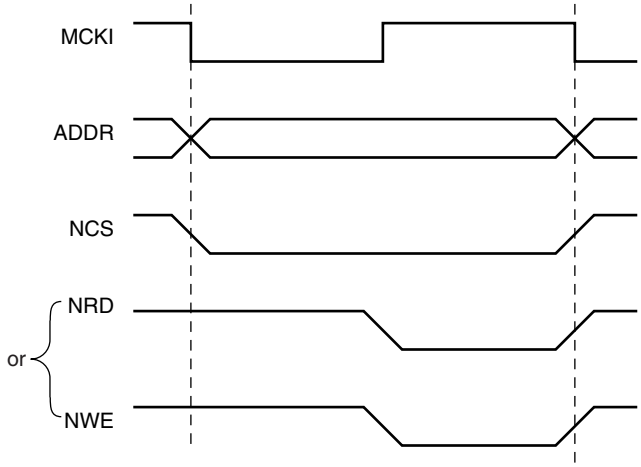

NWE is the same in both protocols. NWE always goes low in the second half of the master clock cycle (see Figure 11-11 on page 31).

11.9.2 Early Read Protocol

Early read protocol provides more time for a read access from the memory by asserting NRD at the beginning of the clock cycle. In the case of successive read cycles in the same memory, NRD remains active continuously. Since a read cycle normally limits the speed of operation of the external memory system, early read protocol can allow a faster clock frequency to be used. However, an extra wait state is required in some cases to avoid contentions on the external bus.

Figure 11-10. Early Read Protocol

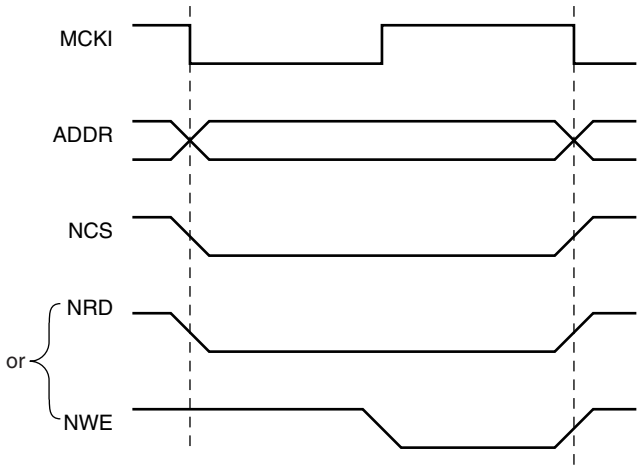

11.9.3 Early Read Wait State

In early read protocol, an early read wait state is automatically inserted when an external write cycle is followed by a read cycle to allow time for the write cycle to end before the subsequent read cycle begins (see Figure 11-11). This wait state is generated in addition to any other programmed wait states (i.e., data float wait).

No wait state is added when a read cycle is followed by a write cycle, between consecutive accesses of the same type or between external and internal memory accesses.

Early read wait states affect the external bus only. They do not affect internal bus timing.

Figure 11-11. Early Read Wait State

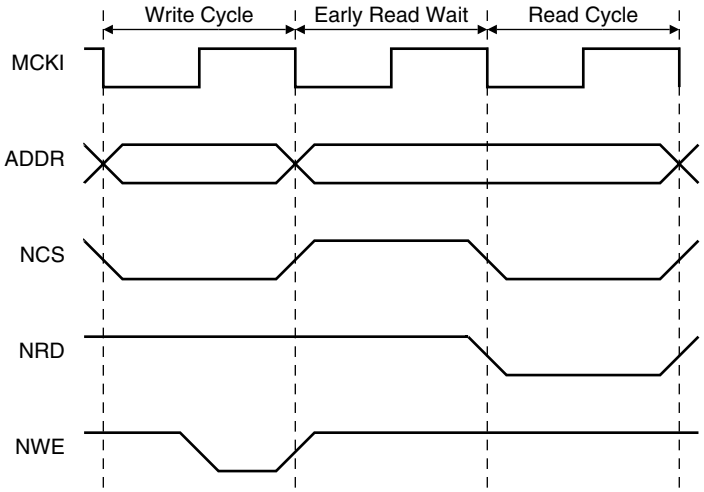

11.10 Write Data Hold Time

During write cycles in both protocols, output data becomes valid after the falling edge of the NWE signal and remains valid after the rising edge of NWE, as illustrated in Figure 11-12. The external NWE waveform (on the NWE pin) is used to control the output data timing to guarantee this operation.

It is therefore necessary to avoid excessive loading of the NWE pins, which could delay the write signal too long and cause a contention with a subsequent read cycle in standard protocol.

Figure 11-12. Data Hold Time

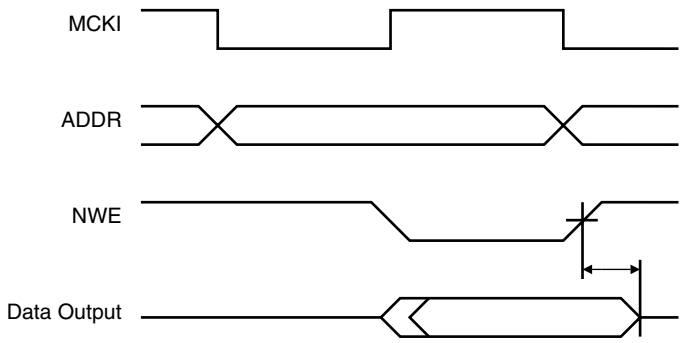

In early read protocol the data can remain valid longer than in standard read protocol due to the additional wait cycle which follows a write access.

11.11 Wait States

The EBI can automatically insert wait states. The different types of wait states are listed below:

- Standard wait states
- Data float wait states
- External wait states
- Chip select change wait states
- Early Read wait states (as described in ”Read Protocols” on page 29)

11.11.1 Standard Wait States

Each chip select can be programmed to insert one or more wait states during an access on the corresponding device. This is done by setting the WSE field in the corresponding EBI_CSR. The number of cycles to insert is programmed in the NWS field in the same register.

Below is the correspondence between the number of standard wait states programmed and the number of cycles during which the NWE pulse is held low:

0 wait states	1/2 cycle
1 wait state	1 cycle

For each additional wait state programmed, an additional cycle is added.

Figure 11-13. One Wait State Access

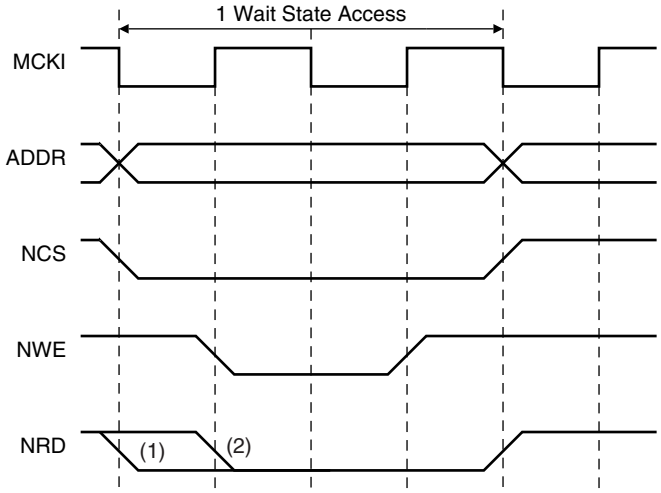

Notes: 1. Early Read Protocol
2. Standard Read Protocol

11.11.2 Data Float Wait State

Some memory devices are slow to release the external bus. For such devices, it is necessary to add wait states (data float waits) after a read access before starting a write access or a read access to a different external memory.

The data float output time (t_{DF}) for each external memory device is programmed in the TDF field of the EBI_CSR register for the corresponding chip select. The value (0 - 7 clock cycles) indicates the number of data float waits to be inserted and represents the time allowed for the data output to go high impedance after the memory is disabled.

Data float wait states do not delay internal memory accesses. Hence, a single access to an external memory with long t_{DF} will not slow down the execution of a program from internal memory.

The EBI keeps track of the programmed external data float time during internal accesses, to ensure that the external memory system is not accessed while it is still busy.

Internal memory accesses and consecutive accesses to the same external memory do not have added data float wait states.

Figure 11-14. Data Float Output Time

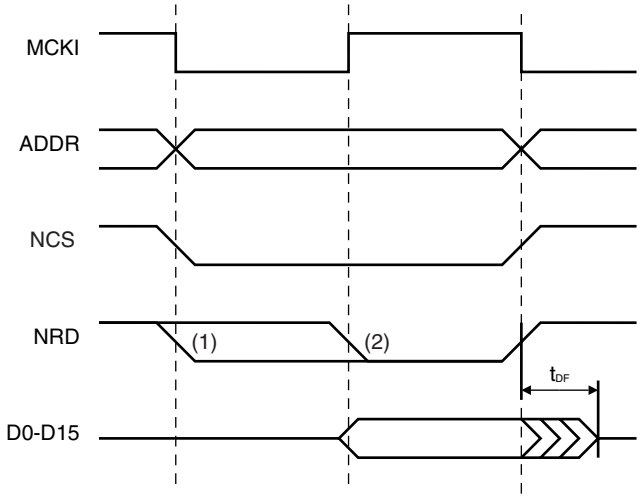

Notes: 1. Early Read Protocol
2. Standard Read Protocol

11.11.3 External Wait

The NWAIT input can be used to add wait states at any time. NWAIT is active low and is detected on the rising edge of the clock.

If NWAIT is low at the rising edge of the clock, the EBI adds a wait state and changes neither the output signals nor its internal counters and state. When NWAIT is de-asserted, the EBI finishes the access sequence.

The NWAIT signal must meet setup and hold requirements on the rising edge of the clock.

Figure 11-15. External Wait

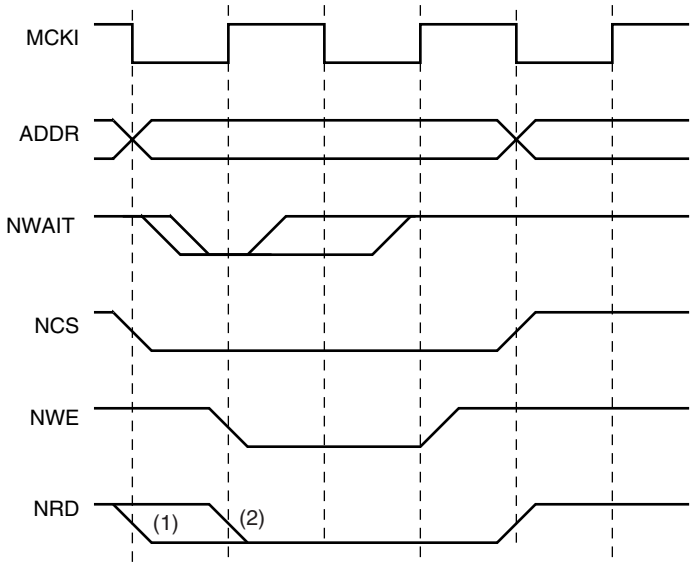

Notes: 1. Early Read Protocol
2. Standard Read Protocol

11.11.4 Chip Select Change Wait States

A chip select wait state is automatically inserted when consecutive accesses are made to two different external memories (if no wait states have already been inserted). If any wait states have already been inserted, (e.g., data float wait) then none are added.

Figure 11-16. Chip Select Wait

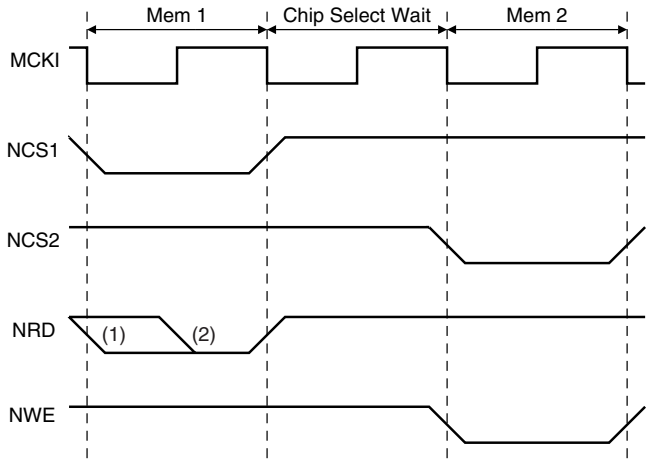

Notes: 1. Early Read Protocol
2. Standard Read Protocol

11.12 Memory Access Waveforms

Figures 11-17 through 11-20 show examples of the two alternative protocols for external memory read access.

Figure 11-17. Standard Read Protocol without t_{DF}

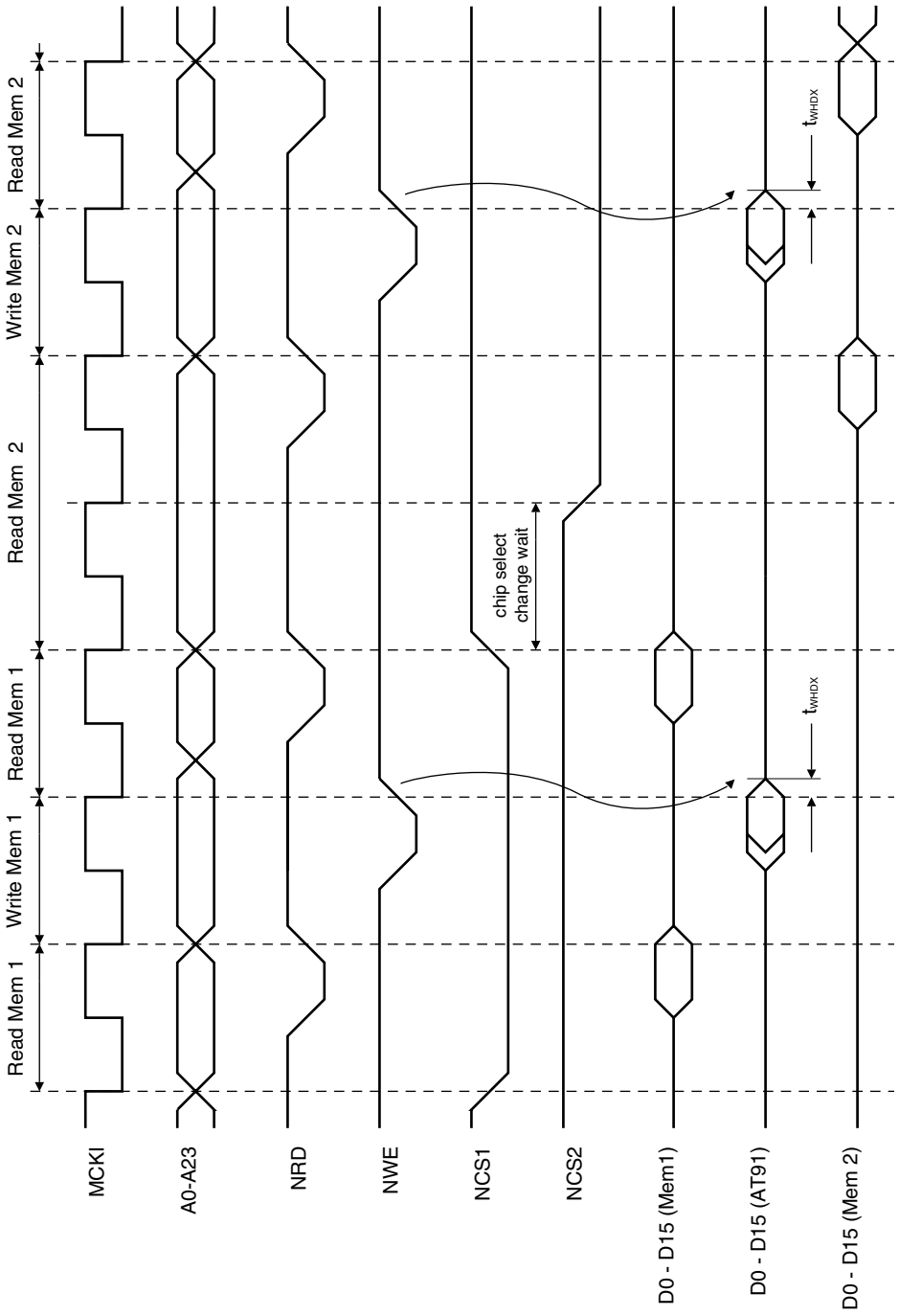

Figure 11-18. Early Read Protocol without t_{DF}

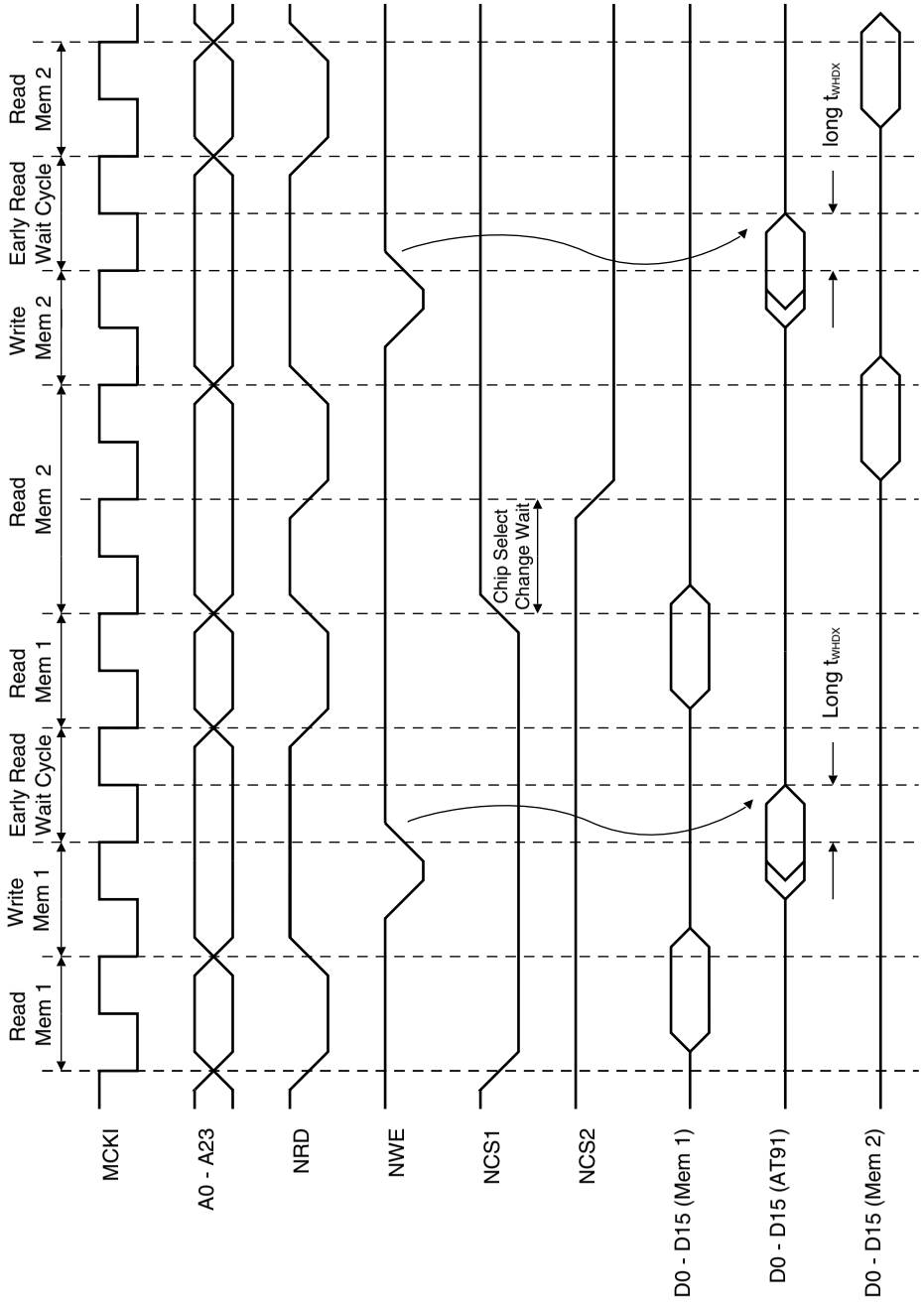

Figure 11-19. Standard Read Protocol with t_{DF}

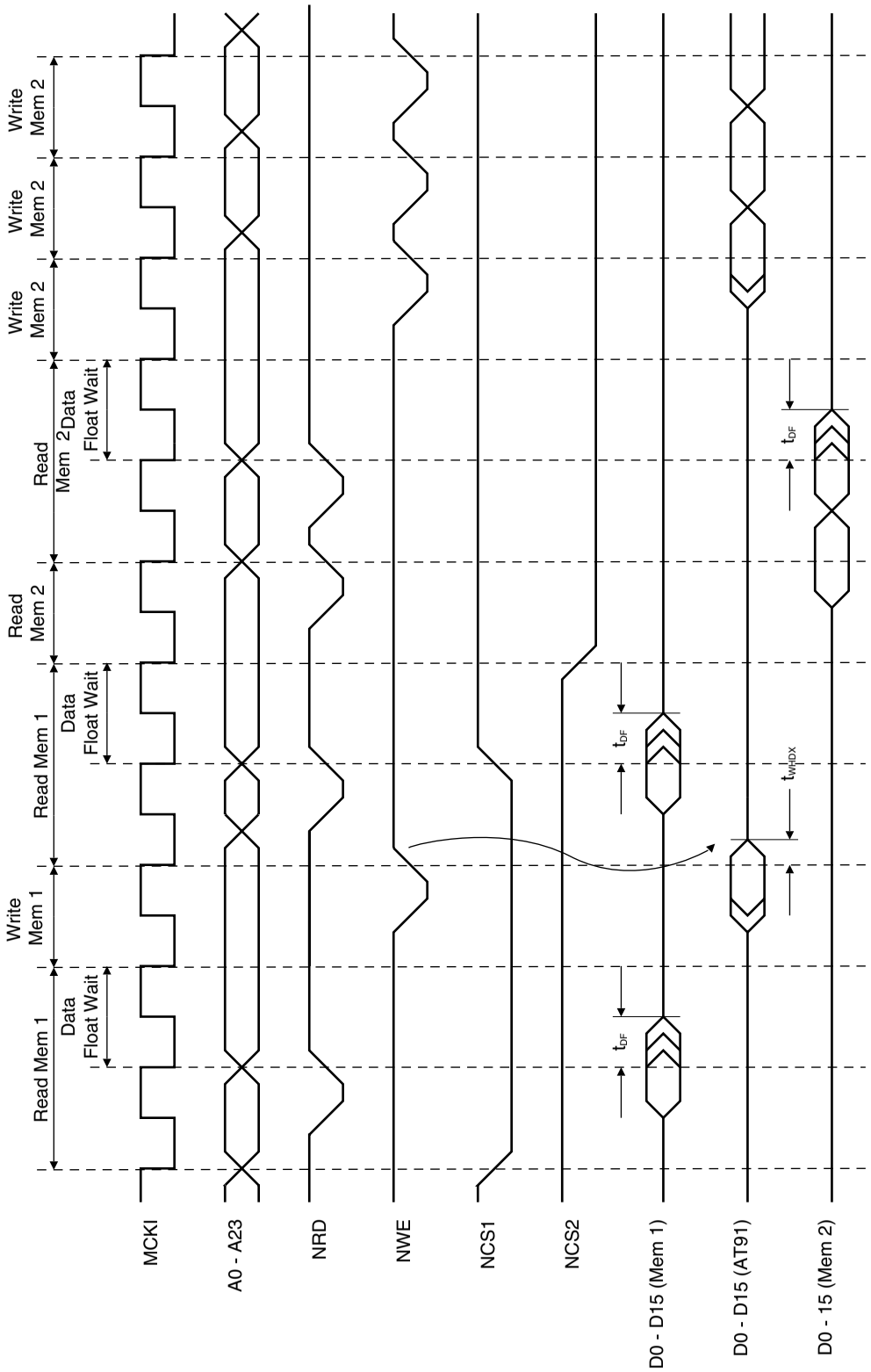

Figure 11-20. Early Read Protocol with t_{DF}

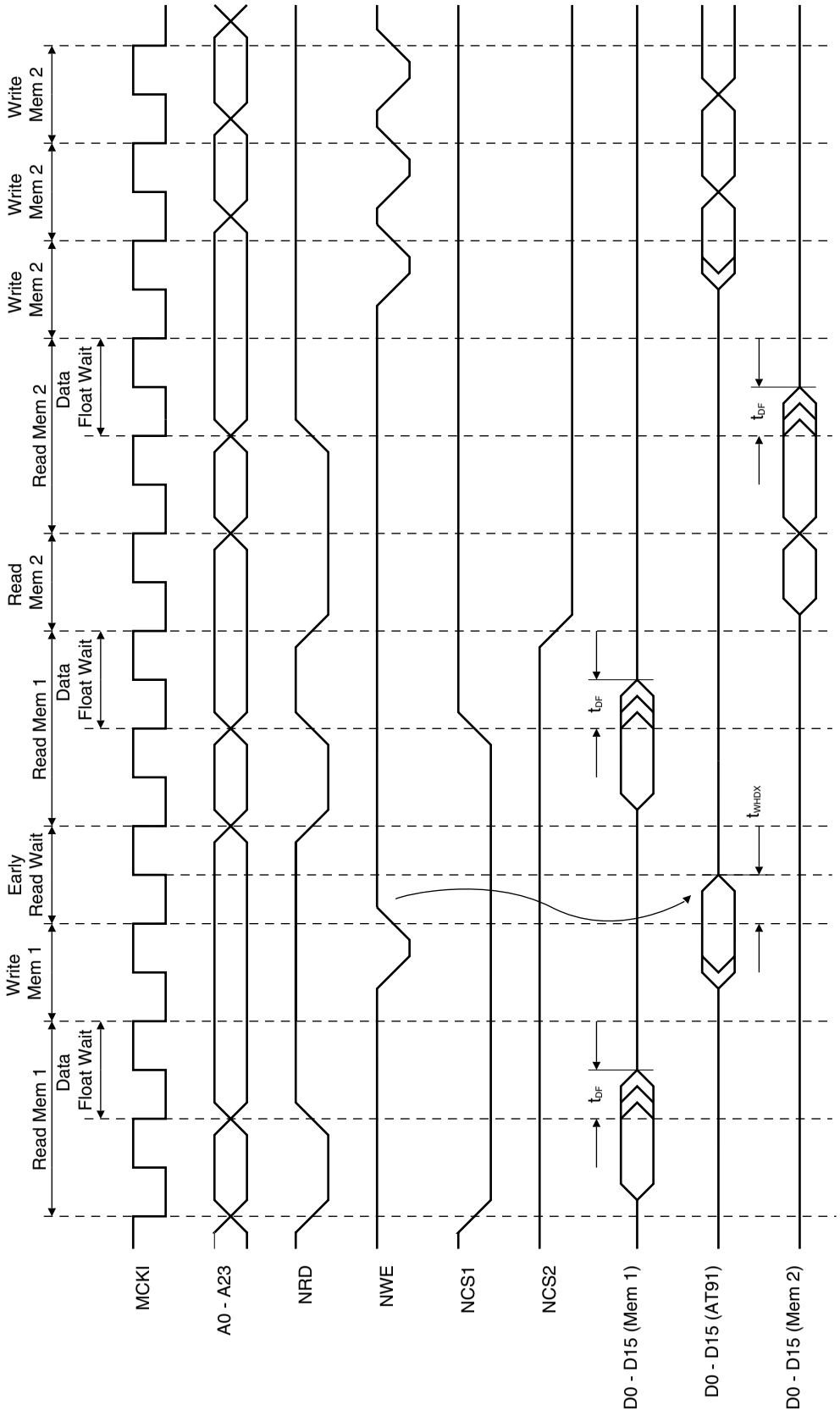

Figures 11-21 through 11-27 show the timing cycles and wait states for read and write access to the various AT91M42800A external memory devices. The configurations described are shown in the following table:

Table 11-3. Memory Access Waveforms

Figure Number	Number of Wait States	Bus Width	Size of Data Transfer
11-21	0	16	Word
11-22	1	16	Word
11-23	1	16	Half-word
11-24	0	8	Word
11-25	1	8	Half-word
11-26	1	8	Byte
11-27	0	16	Byte

Figure 11-21. 0 Wait States, 16-bit Bus Width, Word Transfer

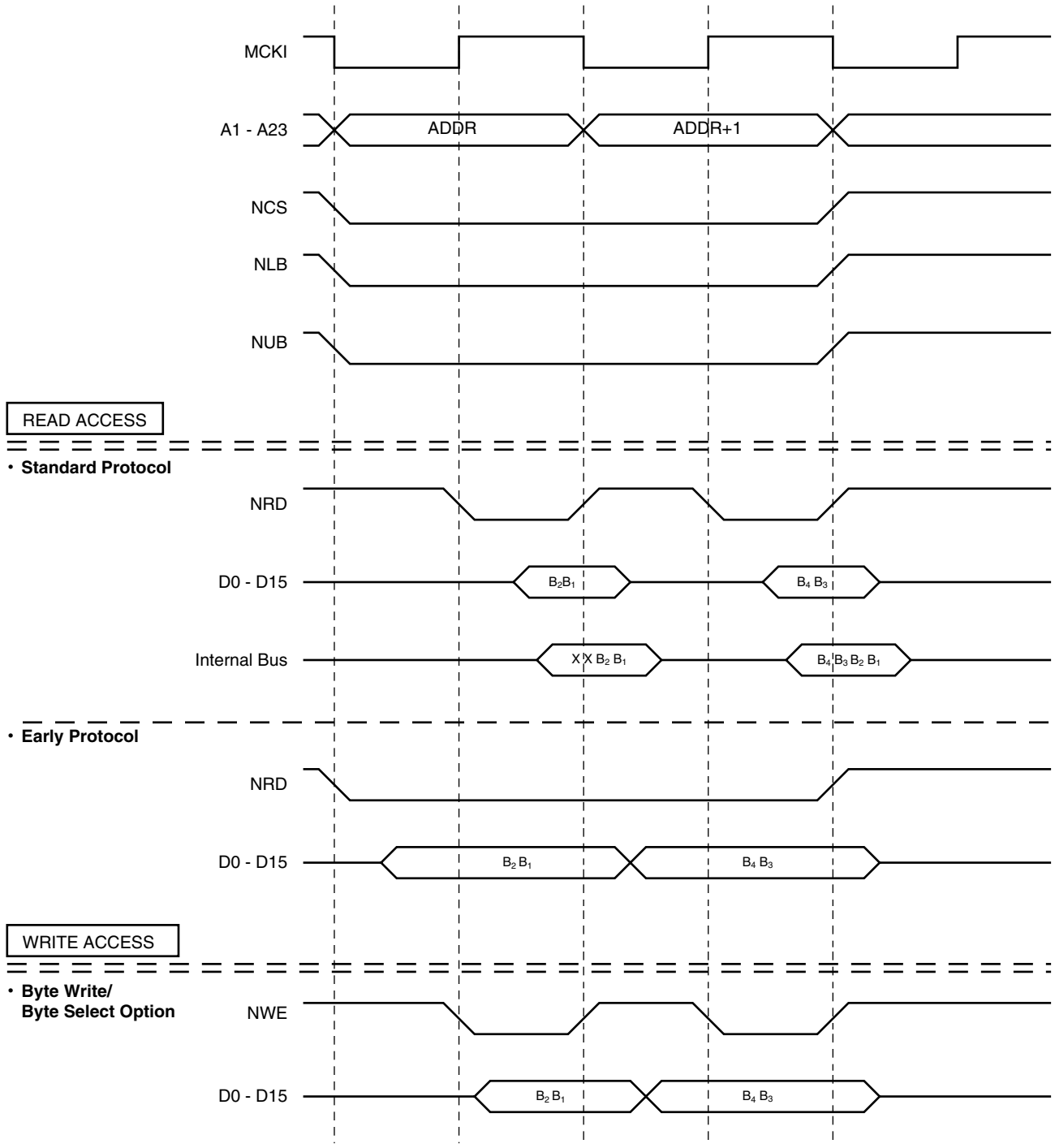

Figure 11-22. 1 Wait State, 16-bit Bus Width, Word Transfer

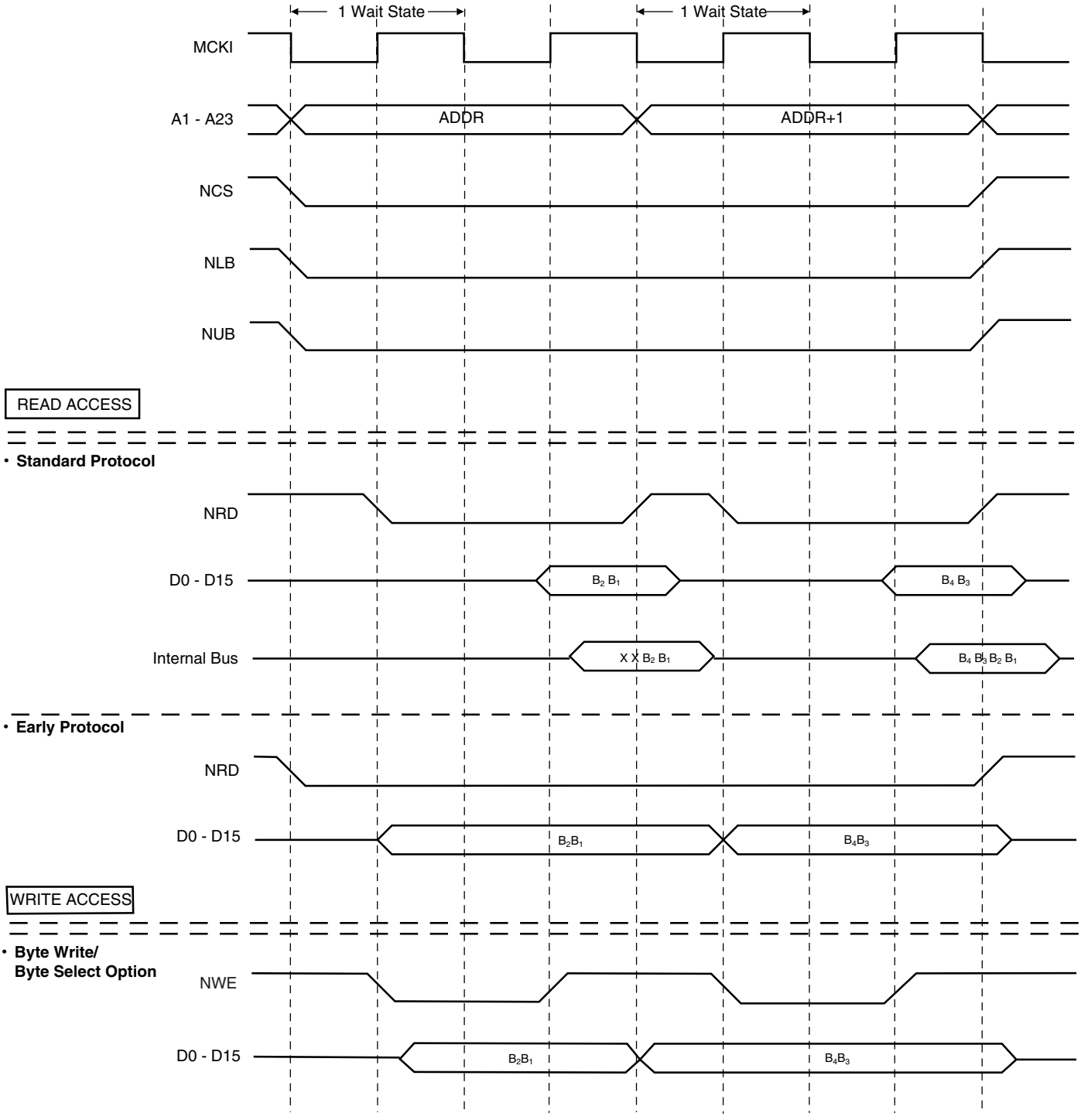

Figure 11-23. 1 Wait State, 16-bit Bus Width, Half-word Transfer

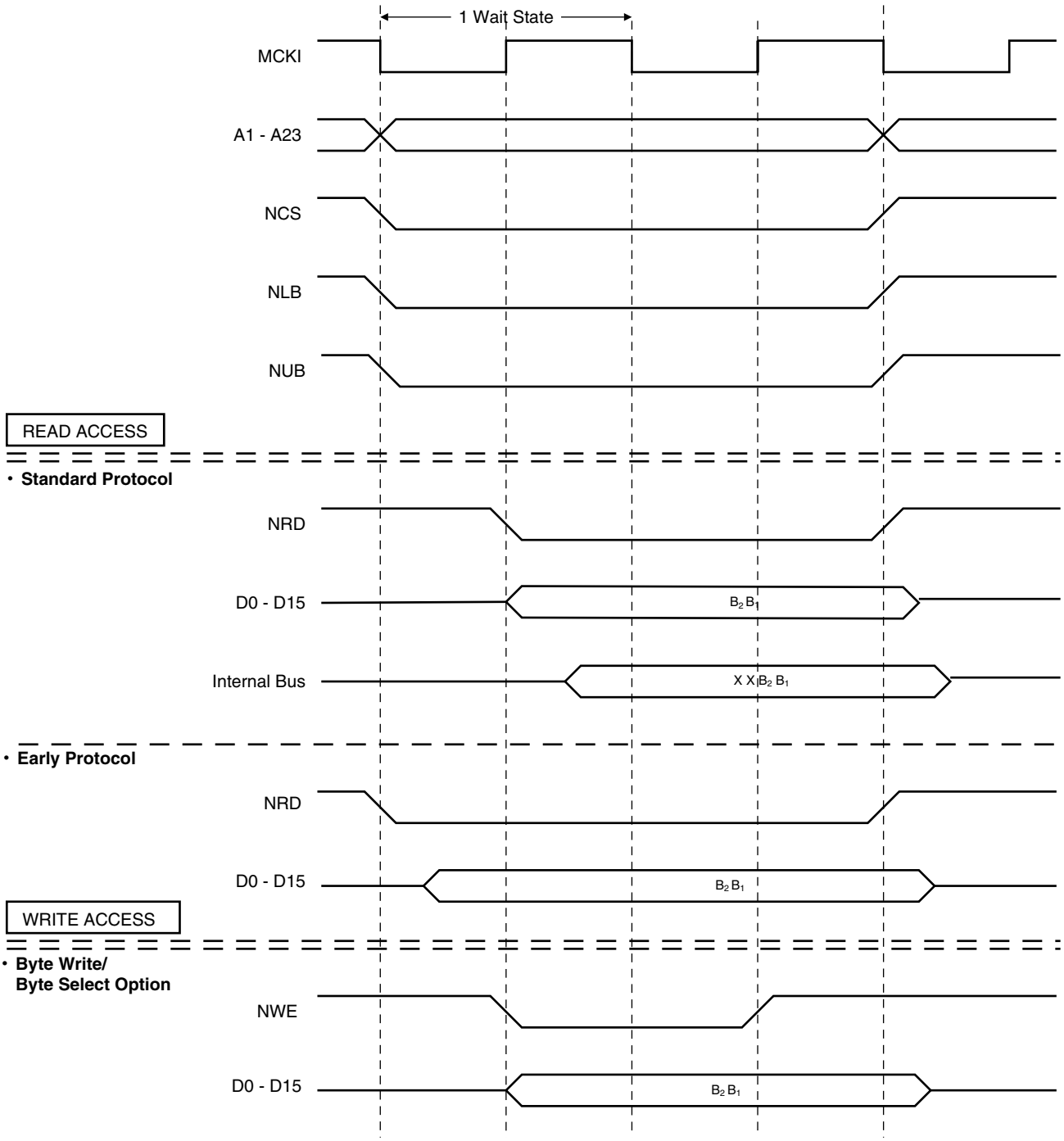

Figure 11-24. 0 Wait States, 8-bit Bus Width, Word Transfer

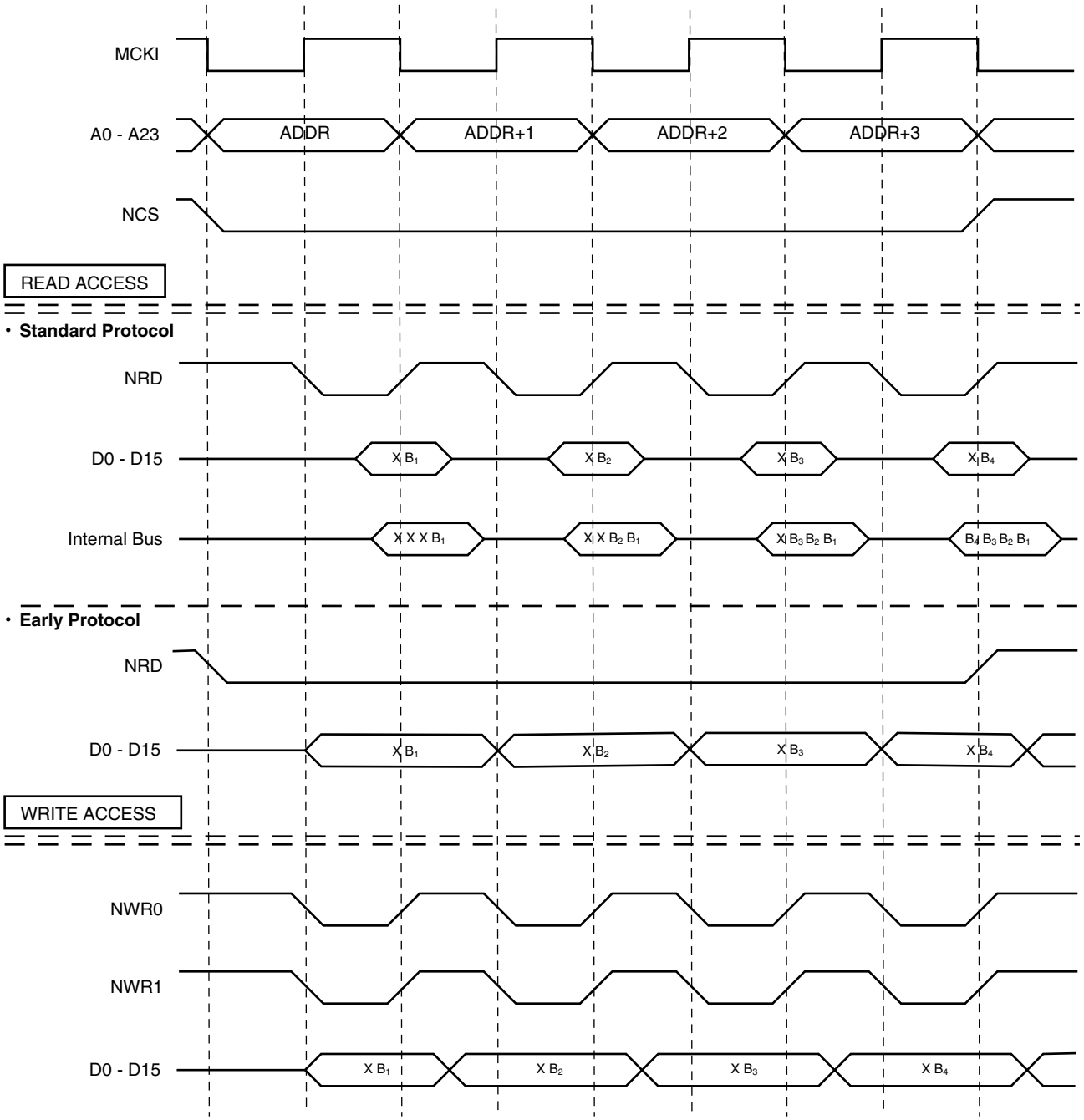

Figure 11-25. 1 Wait State, 8-bit Bus Width, Half-word Transfer

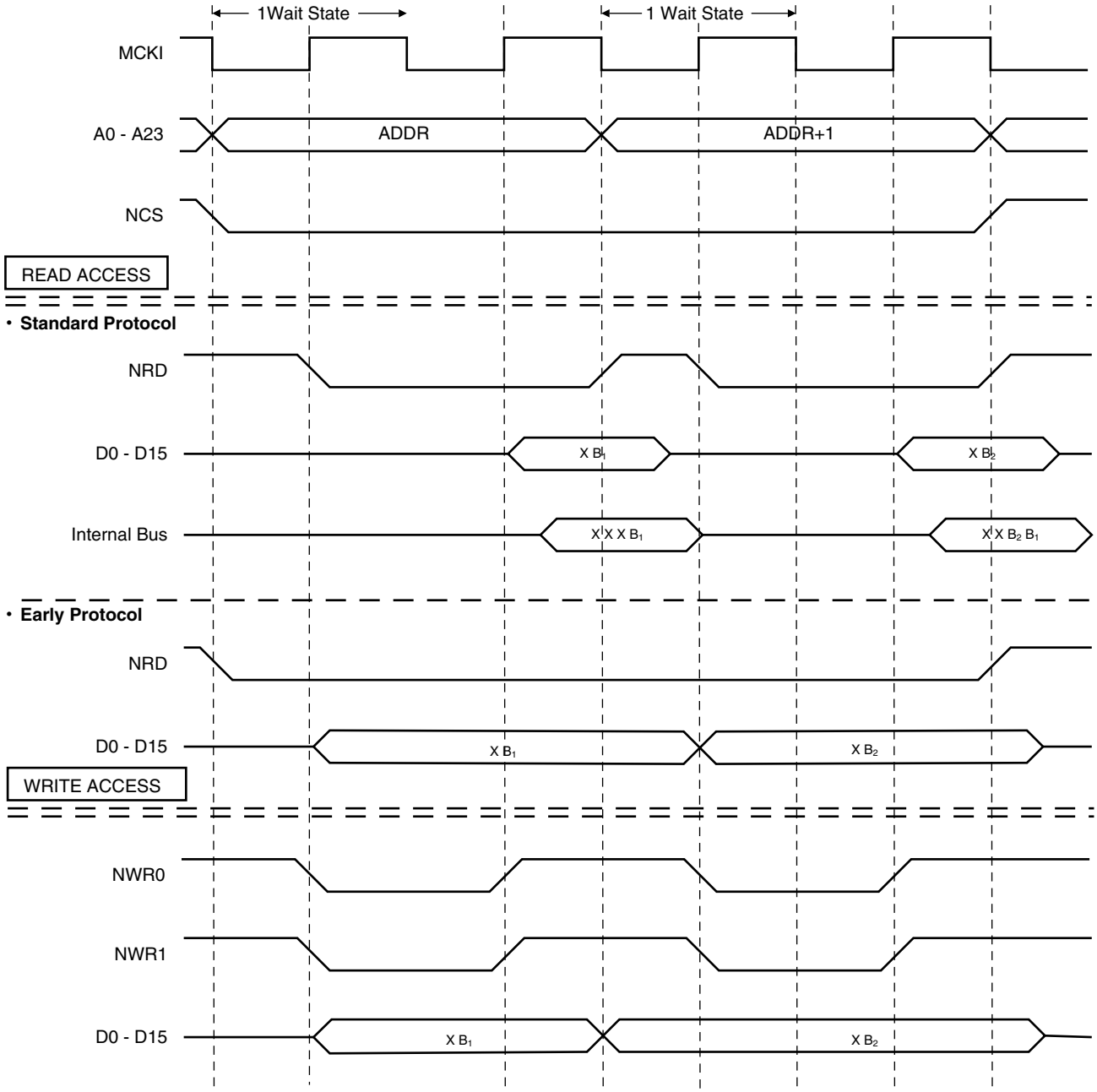

Figure 11-26. 1 Wait State, 8-bit Bus Width, Byte Transfer

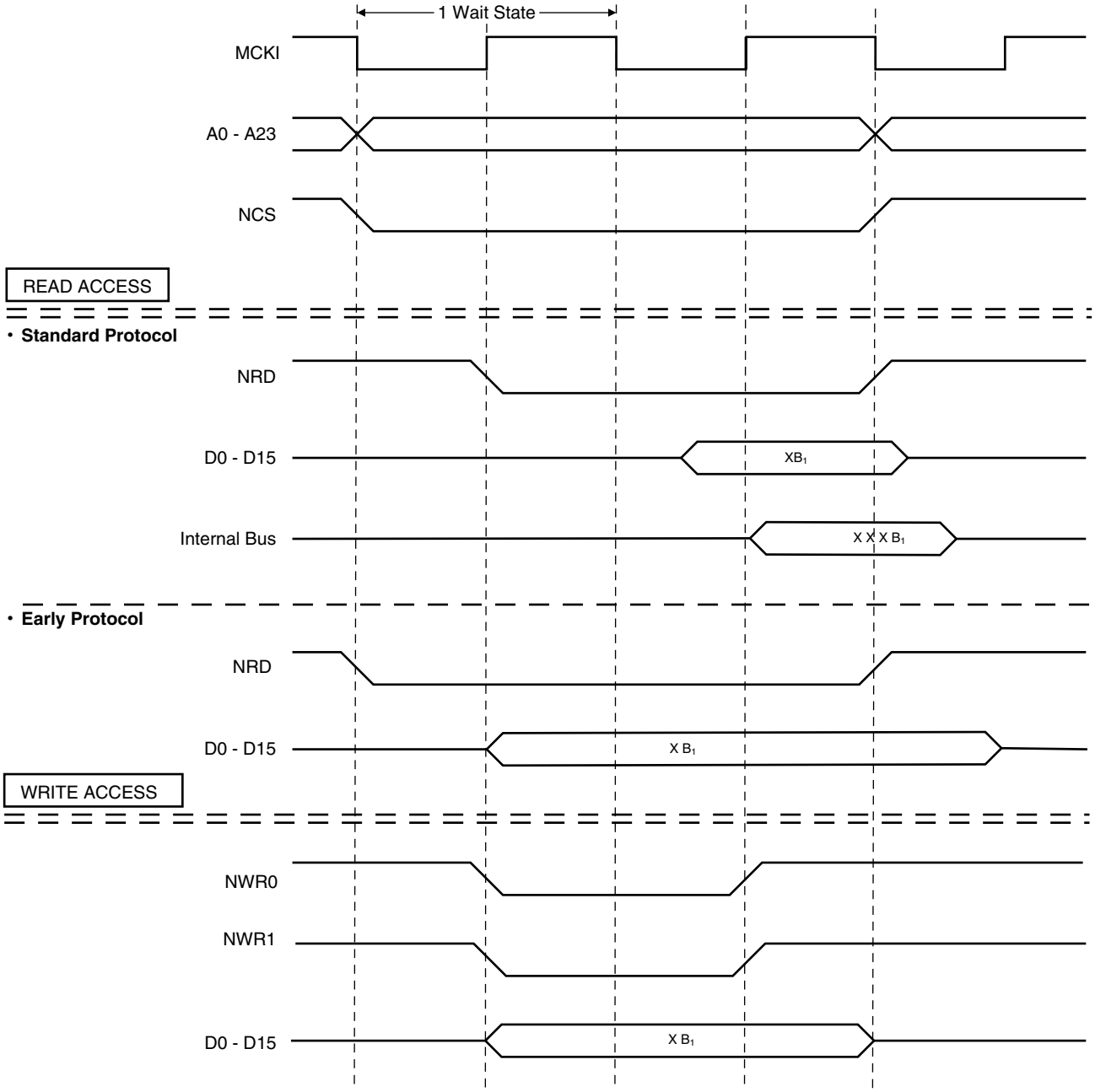

Figure 11-27. 0 Wait States, 16-bit Bus Width, Byte Transfer

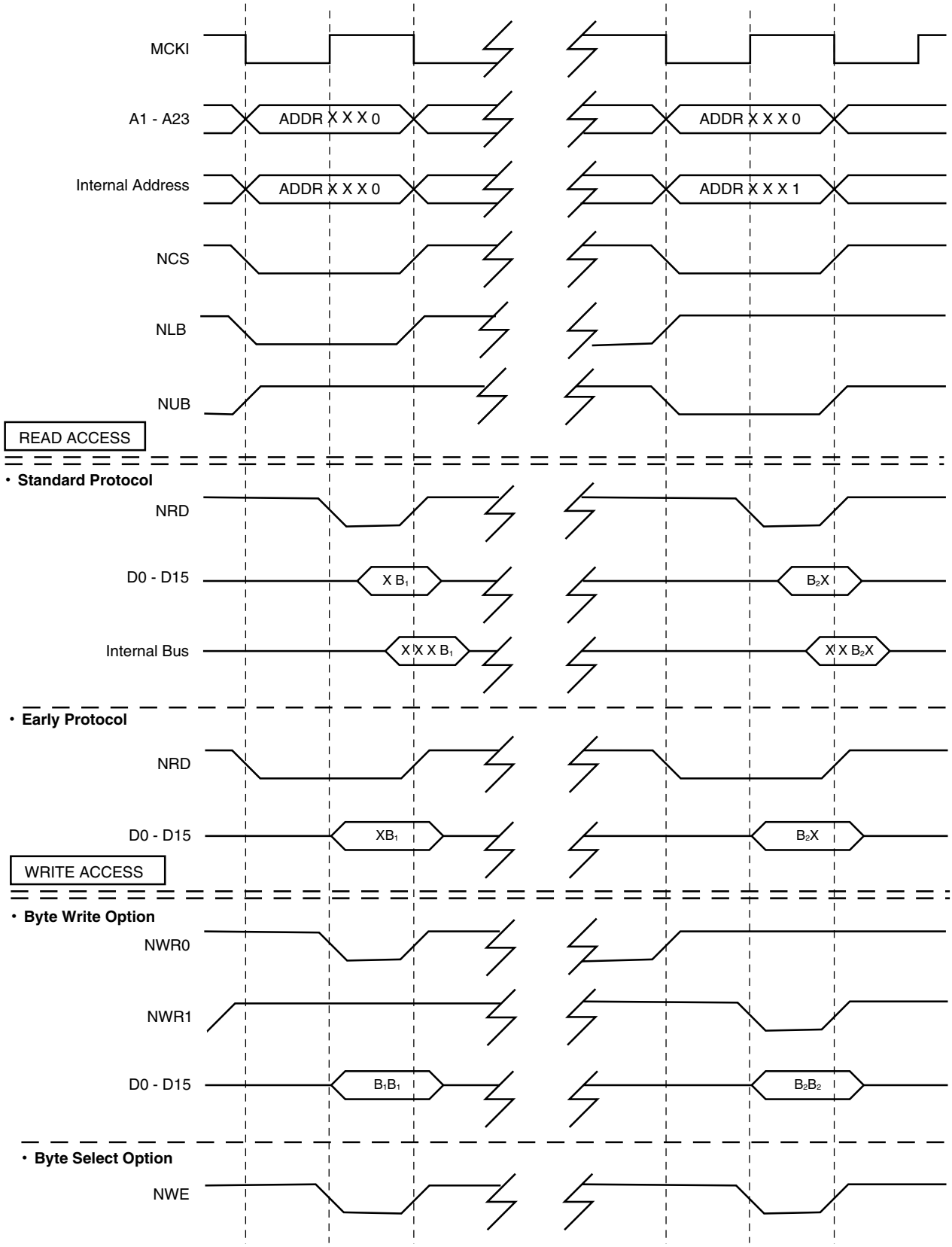

11.13 EBI User Interface

The EBI is programmed using the registers listed in Table 11-4. The Remap Control Register (EBI_RCR) controls exit from Boot mode (see "Boot on NCS0" on page 29). The Memory Control Register (EBI_MCR) is used to program the number of active chip selects and data read protocol. Eight Chip Select Registers (EBI_CSR0 to EBI_CSR7) are used to program the parameters for the individual external memories. Each EBI_CSR must be programmed with a different base address, even for unused chip selects.

The Abort Status registers indicate the access address (EBI_AASR) and the reason for the abort (EBI_ASR).

Base Address: 0xFFE00000 (Code Label `EBI_BASE`)

Table 11-4. EBI Memory Map

Offset	Register	Name	Access	Reset State
0x00	Chip Select Register 0	EBI_CSR0	Read/Write	0x0000201E[1] 0x0000201D[2]
0x04	Chip Select Register 1	EBI_CSR1	Read/Write	0x10000000
0x08	Chip Select Register 2	EBI_CSR2	Read/Write	0x20000000
0x0C	Chip Select Register 3	EBI_CSR3	Read/Write	0x30000000
0x10	Chip Select Register 4	EBI_CSR4	Read/Write	0x40000000
0x14	Chip Select Register 5	EBI_CSR5	Read/Write	0x50000000
0x18	Chip Select Register 6	EBI_CSR6	Read/Write	0x60000000
0x1C	Chip Select Register 7	EBI_CSR7	Read/Write	0x70000000
0x20	Remap Control Register	EBI_RCR	Write-only	–
0x24	Memory Control Register	EBI_MCR	Read/Write	0
0x28	Reserved	–	–	–
0x2C	Reserved	–	–	–
0x30	Abort Status Register	EBI_ASR	Read-only	0x0
0x34	Address Abort Status Register	EBI_AASR	Read-only	0x0

Notes: 1. 8-bit boot (if BMS is detected high)
2. 16-bit boot (if BMS is detected low)

11.14 EBI Chip Select Register

Register Name: EBI_CSR0 - EBI_CSR7
Access Type: Read/Write
Reset Value: See Table 11-4
Absolute Address: 0xFFE00000 - 0xFFE0001C

31	30	29	28	27	26	25	24
BA							

23	22	21	20	19	18	17	16
BA				–	–	–	–

15	14	13	12	11	10	9	8
–	–	CSEN	BAT	TDF			PAGES

7	6	5	4	3	2	1	0
PAGES	–	WSE	NWS			DBW	

- **DBW: Data Bus Width**

DBW		Data Bus Width	Code Label: `EBI_DBW`
0	0	Reserved	–
0	1	16-bit data bus width	EBI_DBW_16
1	0	8-bit data bus width	EBI_DBW_8
1	1	Reserved	–

- **NWS: Number of Wait States**

This field is valid only if WSE is set.

NWS			Number of Standard Wait States	Code Label: `EBI_NWS`
0	0	0	1	EBI_NWS_1
0	0	1	2	EBI_NWS_2
0	1	0	3	EBI_NWS_3
0	1	1	4	EBI_NWS_4
1	0	0	5	EBI_NWS_5
1	0	1	6	EBI_NWS_6
1	1	0	7	EBI_NWS_7
1	1	1	8	EBI_NWS_8

- **WSE: Wait State Enable (Code Label `EBI_WSE`)**

0 = Wait state generation is disabled. No wait states are inserted.

1 = Wait state generation is enabled.

- **PAGES: Page Size**

PAGES		Page Size	Active Bits in Base Address	Code Label: `EBI_PAGES`
0	0	1M Byte	12 Bits (31 - 20)	EBI_PAGES_1M
0	1	4M Bytes	10 Bits (31 - 22)	EBI_PAGES_4M
1	0	16M Bytes	8 Bits (31 - 24)	EBI_PAGES_16M
1	1	64M Bytes	6 Bits (31 - 26)	EBI_PAGES_64M

- **TDF: Data Float Output Time**

TDF			Number of Cycles Added after the Transfer	Code Label: `EBI_TDF`
0	0	0	0	EBI_TDF_0
0	0	1	1	EBI_TDF_1
0	1	0	2	EBI_TDF_2
0	1	1	3	EBI_TDF_3
1	0	0	4	EBI_TDF_4
1	0	1	5	EBI_TDF_5
1	1	0	6	EBI_TDF_6
1	1	1	7	EBI_TDF_7

- **BAT: Byte Access Type**

BAT	Selected BAT	Code Label: `EBI_BAT`
0	Byte-write access type	EBI_BAT_BYTE_WRITE
1	Byte-select access type	EBI_BAT_BYTE_SELECT

- **CSEN: Chip Select Enable (Code Label `EBI_CSEN`)**

0 = Chip select is disabled.

1 = Chip select is enabled.

- **BA: Base Address (Code Label `EBI_BA`)**

These bits contain the highest bits of the base address. If the page size is larger than 1M byte, the unused bits of the base address are ignored by the EBI decoder.

11.15 EBI Remap Control Register

Register Name: EBI_RCR
Access Type: Write-only
Absolute Address: 0xFFE00020

31	30	29	28	27	26	25	24
–	–	–	–	–	–	–	–
23	22	21	20	19	18	17	16
–	–	–	–	–	–	–	–
15	14	13	12	11	10	9	8
–	–	–	–	–	–	–	–
7	6	5	4	3	2	1	0
–	–	–	–	–	–	–	RCB

- **RCB: Remap Command Bit (Code Label `EBI_RCB`)**

0 = No effect.

1 = Cancels the remapping (performed at reset) of the page zero memory devices.

11.16 EBI Memory Control Register

Register Name: EBI_MCR
Access Type: Read/Write
Reset Value: See Table 11-4
Absolute Address: 0xFFE00024

31	30	29	28	27	26	25	24
–	–	–	–	–	–	–	–
23	22	21	20	19	18	17	16
–	–	–	–	–	–	–	–
15	14	13	12	11	10	9	8
–	–	–	–	–	–	–	–
7	6	5	4	3	2	1	0
–	–	–	DRP	–	ALE		

- **ALE: Address Line Enable**

This field determines the number of valid address lines and the number of valid chip select lines.

ALE			Valid Address Bits	Maximum Addressable Space	Valid Chip Select	Code Label: `EBI_ALE`
0	X	X	A20, A21, A22, A23	16M Bytes	None	EBI_ALE_16M
1	0	0	A20, A21, A22	8M Bytes	CS4	EBI_ALE_8M
1	0	1	A20, A21	4M Bytes	CS4, CS5	EBI_ALE_4M
1	1	0	A20	2M Bytes	CS4, CS5, CS6	EBI_ALE_2M
1	1	1	None	1M Byte	CS4, CS5, CS6, CS7	EBI_ALE_1M

- **DRP: Data Read Protocol**

DRP	Selected DRP	Code Label: `EBI_DRP`
0	Standard read protocol for all external memory devices enabled	EBI_DRP_STANDARD
1	Early read protocol for all external memory devices enabled	EBI_DRP_EARLY

11.17 Abort Status Register

Register Name: EBI_ASR
Access Type: Read-only
Offset: 0x30
Reset Value: 0x0

31	30	29	28	27	26	25	24
–	–	–	–	–	–	–	–
23	22	21	20	19	18	17	16
–	–	–	–	–	–	–	–
15	14	13	12	11	10	9	8
–	–	PDC	ARM	ABTTYP		ABTSZ	
7	6	5	4	3	2	1	0
–	–	–	–	–	–	MISADD	UNDADD

- **UNDADD: Undefined Address Abort Status**

0 = The last abort is not due to the access of an undefined address in the EBI address space.

1 = The last abort is due to the access of an undefined address in the EBI address space.

- **MISADD: Misaligned Address Abort Status**

0 = During the last aborted access, the address required by the core was not unaligned.

1 = During the last aborted access, the address required by the core was unaligned.

- **ABTSZ: Abort Size Status**

This bit provides the size of the aborted access required by the core.

ABTSZ		Abort Size
0	0	Byte
0	1	Half-word
1	0	Word
1	1	Reserved

- **ABTTYP: Abort Type Status**

This bit provides the type of the aborted access required by the core.

ABTTYP		Abort Size
0	0	Data read
0	1	Data write
1	0	Code fetch
1	1	Reserved

- **ARM: Abort Induced by the ARM Core**

0 = The last abort is not due to the ARM core.

1 = The last abort is due to the ARM core.

- **PDC: Abort Induced by the Peripheral Data Controller**

0 = The last abort is not due to the Peripheral Data controller.

1 = The last abort is due to the Peripheral Data controller.

11.18 Abort Address Status Register

Register Name: EBI_AASR
Access Type: Read-only
Offset: 0x34
Reset Value: 0x0

31	30	29	28	27	26	25	24
ABTADD							
23	22	21	20	19	18	17	16
ABTADD							
15	14	13	12	11	10	9	8
ABTADD							
7	6	5	4	3	2	1	0
ABTADD							

- **ABTADD: Abort Address**

This field contains the address required by the last aborted access.

12. PMC: Power Management Controller

The AT91M42800A's Power Management Controller optimizes the power consumption of the device. The PMC controls the clocking elements such as the oscillator and the PLLs, and the System and the Peripheral Clocks. It also controls the MCKO pin and enables the user to select four different signals to be driven on this pin.

The AT91M42800A has the following clock elements:

- The oscillator, which provides a clock that depends on the crystal fundamental frequency connected between the XIN and XOUT pins
- PLL A, which provides a low-to-middle frequency clock range
- PLL B, which provides a middle-to-high frequency range
- The Clock prescaler
- The System Clock controller
- The Peripheral Clock controller
- The Master Clock Output controller

The on-chip low-power oscillator together with the PLL-based frequency multiplier and the prescaler results in a programmable clock between 500 Hz and 66 MHz. It is the responsibility of the user to make sure that the PMC programming does not result in a clock over the acceptable limits.

Figure 12-1. Oscillator, PLL and Clock Sources

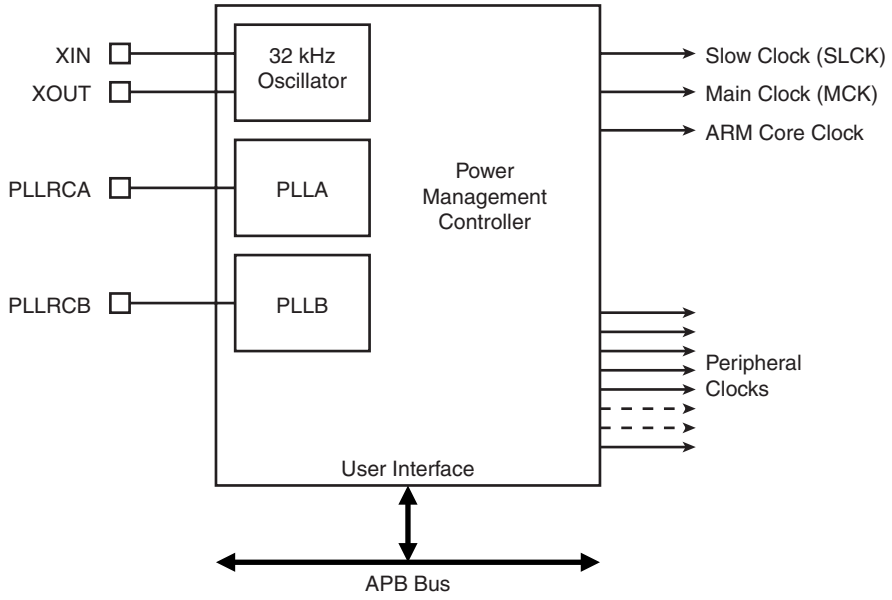

12.1 Oscillator and Slow Clock

The integrated oscillator generates the Slow Clock. It is designed for use with a 32.768 kHz fundamental crystal. A 38.4 kHz crystal can be used. The bias resistor is on-chip and the oscillator integrates an equivalent load capacitance equal to 10 pF.

Figure 12-2. Slow Clock

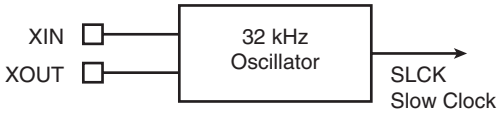

To operate correctly, the crystal must be as close to the XIN and XOUT pins as possible. An external variable capacitor can be added to adjust the oscillator frequency.

Figure 12-3. Crystal Location

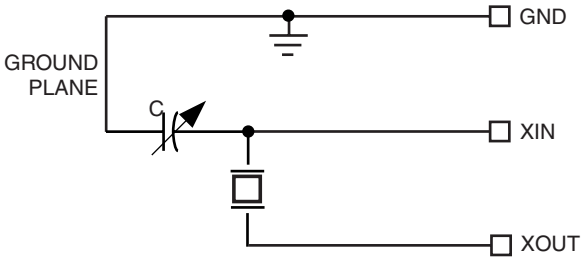

12.2 Master Clock

The Master Clock (MCK) is generated from the Slow Clock by means of one of the two integrated PLLs and the prescaler.

Figure 12-4. Master Clock

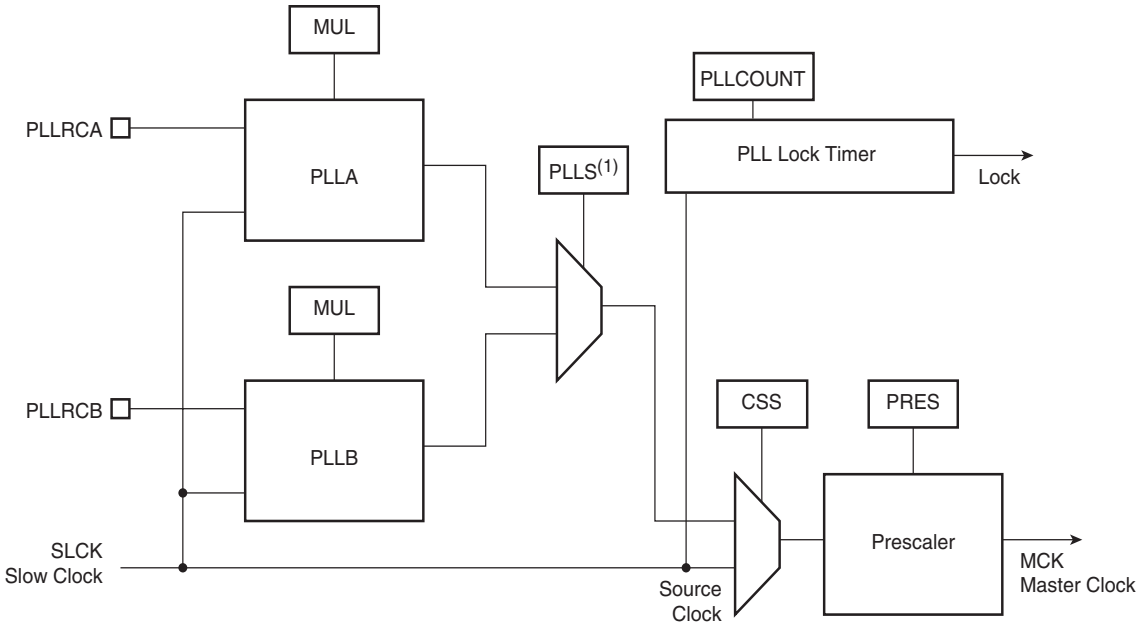

Note: 1. Value written at reset and not subsequently programmable.

12.2.1 Phase Locked Loops

Two PLLs are integrated in the AT91M42800A in order to cover a larger frequency range. Both PLLs have a Slow Clock input and a dedicated pin (PLLRCA or PLLRCB), which must have appropriate capacitors and resistors. The capacitors and resistors serve as a second

order filter. The PLLRC pin (A or B) that corresponds to the PLL that is disabled may be grounded if capacitors and resistors need to be saved.

Figure 12-5. PLL Capacitors and Resistors

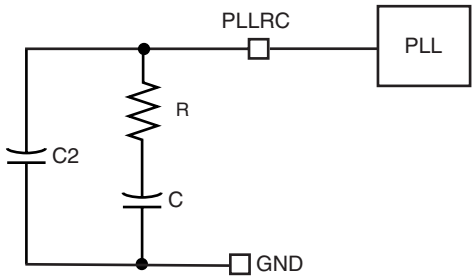

Typical values for the two PLLs are shown below:

PLLA:

F_{SCLK} = 32.768 kHz

$F_{out_}$PLLA = 16.776 MHz

R = 1600 Ohm

C = 100 nF

C_2 = 10 nF

With these parameters, the output frequency is stable (±10%) in 600 µs. This settling time is the value to be programmed in the PLLCOUNT field of PMC_CGMR. The maximum frequency overshoot during this phase is 22.5 MHz.

PLLB:

F_{SCLK} = 32.768 kHz

$F_{out_}$PLLB = 33.554 MHz

R = 800 Ohm

C = 1 µF

C_2 = 100 nF

With these parameters, the output frequency is stable (±10%) in 4 ms. This settling time is the value to be programmed in the PLLCOUNT field of PMC_CGMR. The maximum frequency overshoot during this phase is 38 MHz.

12.2.2 PLL Selection

The required PLL must be selected at the first writing access and cannot be changed after that. The PLLS bit in PMC_CGMR (Clock Generator Mode Register) determines which PLL module is activated. The other PLL is disabled in order to reduce power consumption and can only be activated by another reset. Writing in PMC_CGMR with a different value has no effect.

12.2.3 Source Clock Selection

The bit CSS in PMC_CGMR selects the Slow Clock or the output of the activated PLL as the Source Clock of the prescaler. After reset, the CSS field is 0, selecting the Slow Clock as Source Clock.

When switching from Slow Clock to PLL Output, the Source Clock takes effect after 3 Slow Clock cycles plus 2.5 PLL output signal cycles. This is a maximum value.

When switching from PLL Output to Slow Clock, the switch takes effect after 3.5 Slow Clock cycles plus 2.5 PLL output signal cycles. This is a maximum value.

12.2.4 PLL Programming

Once the PLL is selected, the output of the active PLL is a multiple of the Slow Clock, determined by the MUL field of the PMC_CGMR. The value of the multiply factor can be up to 2048. The multiplication factor is the programmed value plus one (MUL+1).

Each time PMC_CGMR is written with a MUL value different from the existing one, the LOCK bit in PMC_SR is automatically cleared and the PLL Lock Timer is started (see Section 12.2.5 "PLL Lock Timer" on page 58). The LOCK bit is set when the PLL Lock Timer reaches 0.

If a null value is programmed in the MUL field, the PLL is automatically disabled and bypassed to save power. The LOCK bit in PMC_SR is also automatically cleared.

The time during which the LOCK bit is cleared is user programmable in the field PLLCOUNT in PMC_CGMR. The user must load this parameter with a value depending on the active PLL and its start-up time or the frequency shift performed.

As long as the LOCK bit is 0, the PLL is automatically bypassed and its output is the Slow Clock. This means:

- A switch from the PLL output to the Slow Clock and the associated delays, when the PLL is locked.
- A switch from the Slow Clock to the PLL output and the associated delays, when the LOCK bit is set.

12.2.5 PLL Lock Timer

The Power Management Controller of the AT91M42800A integrates a dedicated 8-bit timer for the locking time of the PLL. This timer is loaded with the value written in PLLCOUNT each time the value in the field MUL changes. At the same time, the LOCK bit in PMC_SR is cleared, and the PLL is bypassed.

The timer counts down the value written in PLLCOUNT on the Slow Clock. The countdown value ranges from 30 µs to 7.8 ms.

When the PLL Lock Timer reaches 0, the LOCK bit is set and can provide an interrupt.

The PLLCOUNT field is defined by the user, and depends on the current state of the PLL (unlocked or locked), the targeted output frequency and the filter implemented on the PLLRC pin.

12.2.6 Prescaler

The Clock Source (Slow Clock or PLL output) selected through the CSS field (Clock Source Select) in PMC_CGMR can be divided by 1, 2, 4, 8, 16, 32 or 64. The default divider after a reset is 1. The output of the prescaler is called Master Clock (MCK).

When the prescaler value is modified, the new defined Master Clock is effective after a maximum delay of 64 Source Clock cycles.

12.3 Master Clock Output Controller

The clock output on MCKO pin can be selected to be the Slow Clock, the Master Clock, the Master Clock inverted or the Master Clock divided by two through the MCKOSS field (Master Clock Output Source Select) in PMC_CGMR. The MCKO pad can be put in Tri-state mode to

save power consumption by setting the bit MCKODS (Master Clock Output Disable) in PMC_CGMR. After a reset the MCKO pin is enabled and is driven by the Slow Clock.

Figure 12-6. Master Clock Output

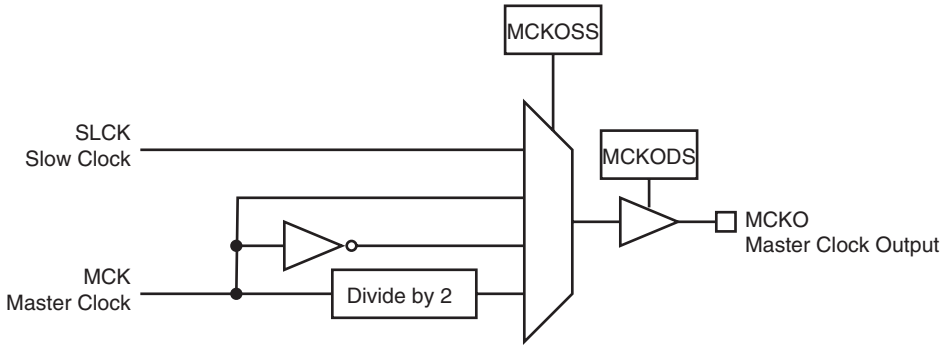

12.4 ARM Processor Clock Controller

The AT91M42800A has only one System Clock. It can be enabled and disabled by writing the System Clock Enable (PMC_SCER) and System Clock Disable Registers (PMC_SCDR). The status of this clock (at least for debug purpose) can be read in the System Clock Status Register (PMC_SCSR).

The system clock is enabled after a reset and is automatically re-enabled by any enabled interrupt.

When the system clock is disabled, the current instruction is finished before the clock is stopped.

Note: Stopping the ARM core does not prevent PDC transfers.

Figure 12-7. System Clock Control

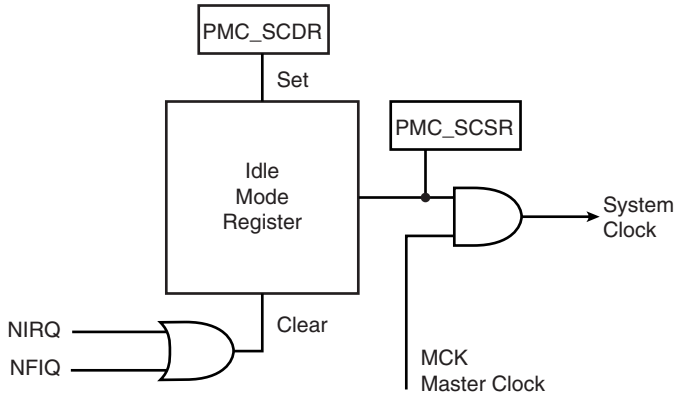

12.5 Peripheral Clock Controller

The clock of each peripheral integrated in the AT91M42800A can be individually enabled and disabled by writing into the Peripheral Clock Enable (PMC_PCER) and Peripheral Clock Disable (PMC_PCDR) registers. The status of the peripheral clock activity can be read in the Peripheral Clock Status Register (PMC_PCSR).

When a peripheral clock is disabled, the clock is immediately stopped. When the clock is re-enabled, the peripheral resumes action where it left off. The peripheral clocks are automatically disabled after a reset.

In order to stop a peripheral, it is recommended that the system software waits until the peripheral has executed its last programmed operation before disabling the clock. This is to avoid data corruption or erroneous behavior of the system.

Note: The bits defined to control the Peripheral Clocks correspond to the bits controlling the Interrupt Sources in the Interrupt Controller.

Figure 12-8. Peripheral Clock Control

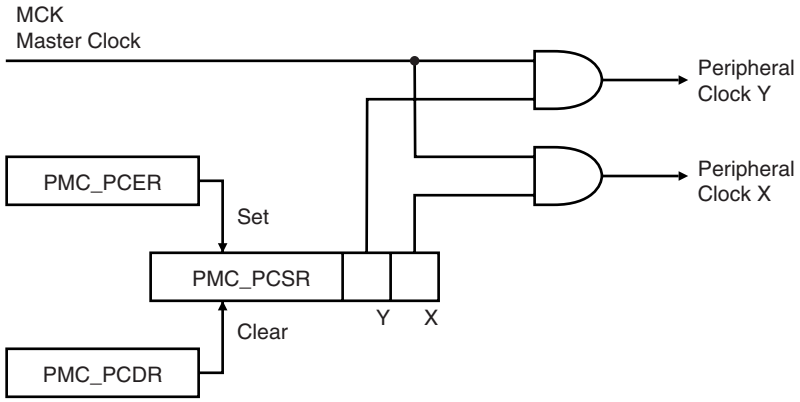

12.6 PMC User Interface

Base Address: 0xFFFF4000 (Code Label `PMC_BASE`)

Table 4. PMC Registers

Offset	Register Name	Register Mnemonic	Access	Reset Value
0x00	System Clock Enable Register	PMC_SCER	Write-only	–
0x04	System Clock Disable Register	PMC_SCDR	Write-only	–
0x08	System Clock Status Register	PMC_SCSR	Read-only	0x00000001
0x0C	Reserved	–	–	–
0x10	Peripheral Clock Enable Register	PMC_PCER	Write-only	–
0x14	Peripheral Clock Disable Register	PMC_PCDR	Write-only	–
0x18	Peripheral Clock Status Register	PMC_PCSR	Read-only	0x00000000
0x1C	Reserved	–	–	–
0x20	Clock Generator Mode Register	PMC_CGMR	Read/Write	0x00000000
0x24	Reserved	–	–	–
0x28	Reserved	–	–	–
0x2C	Reserved	–	–	–
0x30	Status Register	PMC_SR	Read-only	0x00000000
0x34	Interrupt Enable Register	PMC_IER	Write-only	–
0x38	Interrupt Disable Register	PMC_IDR	Write-only	–
0x3C	Interrupt Mask Register	PMC_IMR	Read-only	0x00000000

12.7 PMC System Clock Enable Register

Register Name: PMC_SCER
Access Type: Write-only
Offset: 0x00

31	30	29	28	27	26	25	24
–	–	–	–	–	–	–	–

23	22	21	20	19	18	17	16
–	–	–	–	–	–	–	–

15	14	13	12	11	10	9	8
–	–	–	–	–	–	–	–

7	6	5	4	3	2	1	0
–	–	–	–	–	–	–	CPU

- **CPU: System Clock Enable**

0 = No effect.

1 = Enables the System Clock.

12.8 PMC System Clock Disable Register

Register Name: PMC_SCDR
Access Type: Write-only
Offset: 0x04

31	30	29	28	27	26	25	24
–	–	–	–	–	–	–	–

23	22	21	20	19	18	17	16
–	–	–	–	–	–	–	–

15	14	13	12	11	10	9	8
–	–	–	–	–	–	–	–

7	6	5	4	3	2	1	0
–	–	–	–	–	–	–	CPU

- **CPU: System Clock Disable**

0 = No effect.

1 = Disables the System Clock.

12.9 PMC System Clock Status Register

Register Name: PMC_SCSR
Access Type: Read-only
Offset: 0x08
Reset Value: 0x01

31	30	29	28	27	26	25	24
–	–	–	–	–	–	–	–

23	22	21	20	19	18	17	16
–	–	–	–	–	–	–	–

15	14	13	12	11	10	9	8
–	–	–	–	–	–	–	–

7	6	5	4	3	2	1	0
–	–	–	–	–	–	–	CPU

- **CPU: System Clock Status**

0 = System Clock is disabled.

1 = System Clock is enabled.

12.10 PMC Peripheral Clock Enable Register

Register Name: PMC_PCER
Access Type: Write-only
Offset: 0x10

31	30	29	28	27	26	25	24
–	–	–	–	—	–	–	–

23	22	21	20	19	18	17	16
–	–	–	–	–	–	–	–

15	14	13	12	11	10	9	8
–	PIOB	PIOA	–	TC5	TC4	TC3	TC2

7	6	5	4	3	2	1	0
TC1	TC0	SPIB	SPIA	US1	US0	–	–

- **Peripheral Clock Enable**

0 = No effect.

1 = Enables the peripheral clock.

12.11 PMC Peripheral Clock Disable Register

Register Name: PMC_PCDR
Access Type: Write-only
Offset: 0x14

31	30	29	28	27	26	25	24
–	–	–	–	–	–	–	–

23	22	21	20	19	18	17	16
–	–	–	–	–	–	–	–

15	14	13	12	11	10	9	8
–	PIOB	PIOA	–	TC5	TC4	TC3	TC2

7	6	5	4	3	2	1	0
TC1	TC0	SPIB	SPIA	US1	US0	–	–

- **Peripheral Clock Disable**

0 = No effect.

1 = Disables the peripheral clock.

12.12 PMC Peripheral Clock Status Register

Register Name: PMC_PCSR
Access Type: Read-only
Offset: 0x1C
Reset Value: 0x0

31	30	29	28	27	26	25	24
–	–	–	–	–	–	–	–

23	22	21	20	19	18	17	16
–	–	–	–	–	–	–	–

15	14	13	12	11	10	9	8
–	PIOB	PIOA	–	TC5	TC4	TC3	TC2

7	6	5	4	3	2	1	0
TC1	TC0	SPIB	SPIA	US1	US0	–	–

- **Peripheral Clock Status**

0 = Peripheral clock is disabled.

1 = Peripheral clock is enabled.

12.13 PMC Clock Generator Mode Register

Register Name: PMC_CGMR
Access Type: Read/Write
Offset: 0x20
Reset Value: 0x0

31	30	29	28	27	26	25	24
PLLCOUNT							

23	22	21	20	19	18	17	16
–	–	–	–	–	MUL		

15	14	13	12	11	10	9	8
MUL							

7	6	5	4	3	2	1	0
CSS	MCKODS	MCKOSS		PLLS	PRES		

- **PRES: Prescaler Selection**

PRES			Prescaler Selected	Code Label `PMC_PRES`
0	0	0	None. The Prescaler is bypassed.	`PMC_PRES_NONE`
0	0	1	Divide by 2	`PMC_PRES_DIV2`
0	1	0	Divide by 4	`PMC_PRES_DIV4`
0	1	1	Divide by 8	`PMC_PRES_DIV8`
1	0	0	Divide by 16	`PMC_PRES_DIV16`
1	0	1	Divide by 32	`PMC_PRES_DIV32`
1	1	0	Divide by 64	`PMC_PRES_DIV64`
1	1	1	Reserved	–

- **PLLS: PLL Selection**

0 = The PLL A with 5 - 20 MHz output range is selected as PLL source. (Code Label `PMC_PLL_A`)

- **1 = The PLL B with 20 - 80 MHz output range is selected as PLL source. (Code Label `PMC_PLL_B`)**

Note: This bit can be written only once after the reset. Any write of a different value than this one written the first time has no effect on the bit.

- **MCKOSS: Master Clock Output Source Selection**

MCKOSS		Master Clock Output Source Select	Code Label: `PMC_MCKOSS`
0	0	Slow Clock	`PMC_MCKOSS_SLCK`
0	1	Master Clock	`PMC_MCKOSS_MCK`
1	0	Master Clock inverted	`PMC_MCKOSS_MCKINV`
1	1	Master Clock divided by 2	`PMC_MCKOSS_MCK_DIV2`

- **MCKODS: Master Clock Output Disable (Code Label `PMC_MCKO_DIS`)**

0 = The pin MCKO is driven with the clock selected by MCKOSS.

1 = The pin MCKO is tri-stated.

- **CSS: Clock Source Selection**

0 = The clock source is the Slow Clock.

1 = The clock source is the output of the PLL.

- **MUL: Phase Lock Loop Factor**

0 = The PLL is disabled, reducing at the minimum its power consumption.

1 up to 2047 = The PLL output is at frequency (MUL+1) x Slow Clock frequency when the LOCK bit is set.

- **PLLCOUNT: PLL Lock Counter**

Specifies the number of 32,768 Hz clock cycles for the PLL lock timer to count before the PLL is locked, after the PLL is started.

12.14 PMC Status Register

Register Name: PMC_SR
Access Type: Read-only
Offset: 0x30
Reset Value: 0x0

31	30	29	28	27	26	25	24
–	–	–	–	–	–	–	–

23	22	21	20	19	18	17	16
–	–	–	–	–	–	–	–

15	14	13	12	11	10	9	8
–	–	–	–	–	–	–	–

7	6	5	4	3	2	1	0
–	–	–	–	–	–	–	LOCK

- **LOCK: PLL Lock Status**

0 = The PLL output signal is not stabilized.

1 = The PLL output signal is stabilized.

12.15 PMC Interrupt Enable Register

Register Name: PMC_IER
Access Type: Write-only
Offset: 0x34

31	30	29	28	27	26	25	24
–	–	–	–	–	–	–	–

23	22	21	20	19	18	17	16
–	–	–	–	–	–	–	–

15	14	13	12	11	10	9	8
–	–	–	–	–	–	–	–

7	6	5	4	3	2	1	0
–	–	–	–	–	–	–	LOCK

- **LOCK: PLL Lock Interrupt Enable**

0 = No effect.

1 = Enables the PLL Lock Interrupt.

12.16 PMC Interrupt Disable Register

Register Name: PMC_IDR
Access Type: Write-only
Offset: 0x38

31	30	29	28	27	26	25	24
–	–	–	–	–	–	–	–

23	22	21	20	19	18	17	16
–	–	–	–	–	–	–	–

15	14	13	12	11	10	9	8
–	–	–	–	–	–	–	–

7	6	5	4	3	2	1	0
–	–	–	–	–	–	–	LOCK

- **LOCK: PLL Lock Interrupt Disable**

0 = No effect.

1 = Disables the PLL Lock Interrupt.

12.17 PMC Interrupt Mask Register

Register Name: PMC_IMR
Access Type: Read-only
Offset: 0x3C
Reset Value: 0x0

31	30	29	28	27	26	25	24
–	–	–	–	–	–	–	–

23	22	21	20	19	18	17	16
–	–	–	–	–	–	–	–

15	14	13	12	11	10	9	8
–	–	–	–	–	–	–	–

7	6	5	4	3	2	1	0
–	–	–	–	–	–	–	LOCK

- **LOCK: PLL Lock Interrupt Mask**

0 = The PLL Lock Interrupt is disabled.

1 = The PLL Lock Interrupt is enabled.

13. ST: System Timer

The System Timer module integrates three different free-running timers:

- A Period Interval Timer setting the base time for an Operating System.
- A Watchdog Timer having capabilities to reset the system in case of software deadlock.
- A Real-time Timer counting elapsed seconds.

These timers count using the Slow Clock. Typically, this clock has a frequency of 32.768 kHz.

Figure 13-1. System Timer Module

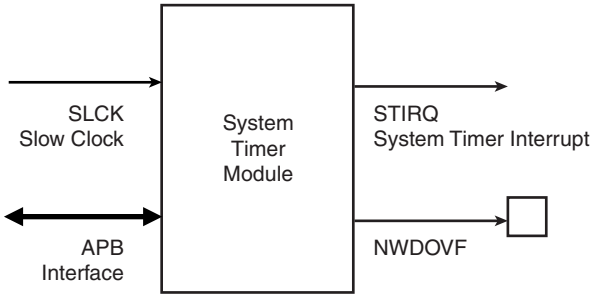

13.1 PIT: Period Interval Timer

The Period Interval Timer can be used to provide periodic interrupts for use by operating systems. It is built around a 16-bit down counter, which is preloaded by a value programmed in ST_PIMR (Period Interval Mode Register). When the PIT counter reaches 0, the bit PITS is set in ST_SR (Status Register), and an interrupt is generated, if it is enabled.

The counter is then automatically reloaded and restarted. Writing to the ST_PIMR at any time immediately reloads and restarts the down counter with the new programmed value.

Figure 13-2. Period Interval Timer

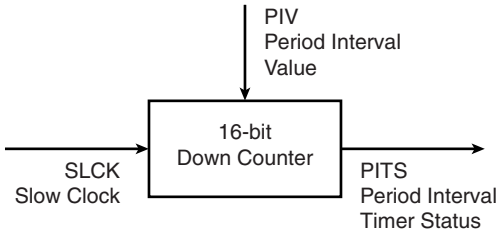

Note: If ST_PIMR is programmed with a period less or equal to the current MCK period, the update of the PITS status bit and its associated interrupt generation are unpredictable.

13.2 WDT: Watchdog Timer

The Watchdog Timer can be used to prevent system lock-up if the software becomes trapped in a deadlock.

It is built around a 16-bit down counter loaded with the value defined in ST_WDMR (Watchdog Mode Register). It uses the Slow Clock divided by 128. This allows the maximum watchdog period to be 256 seconds (with a typical Slow Clock of 32.768 kHz).

In normal operation, the user reloads the watchdog at regular intervals before the timer overflow occurs. This is done by writing to the ST_CR (Control Register) with the bit WDRST set.

If an overflow does occur, the Watchdog Timer:

- Sets the WDOVF in ST_SR (Status Register) from which an interrupt can be generated
- Generates a pulse for 8 slow clock cycles on the external signal NWDOVF if the bit EXTEN in ST_WDMR is set
- Generates an internal reset if the parameter RSTEN in ST_WDMR is set
- Reloads and restarts the down counter

Writing the ST_WDMR does not reload or restart the down counter. When the ST_CR is written the watchdog is immediately reloaded from ST_WDMR and restarted. The slow clock 128 divider is also immediately reset and restarted. When the ARM7TDMI enters debug mode, the output of the slow clock divider stops, preventing any internal or external reset during the debugging phase.

Figure 13-3. Watchdog Timer

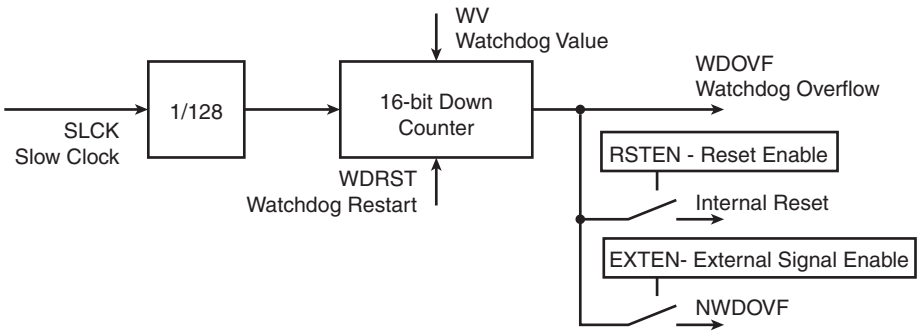

13.3 RTT: Real-time Timer

The Real-time Timer can be used to count elapsed seconds. It is built around a 20-bit counter fed by the Slow Clock divided by a programmable value. At reset this value is set to 0x8000, corresponding to feeding the real-time counter with a 1 Hz signal when the Slow Clock is 32.768 Hz. The 20-bit counter can count up to 1048576 seconds, corresponding to more than 12 days, then roll over to 0.

The Real-time Timer value can be read at any time in the register ST_CRTR (Current Real-time Register). As this value can be updated asynchronously to the Master Clock, it is advisable to read this register twice at the same value to improve accuracy of the returned value.

This current value of the counter is compared with the value written in the Alarm Register ST_RTAR (Real-time Alarm Register). If the counter value matches the alarm, the bit ALMS in ST_SR is set. The Alarm Register is set to its maximum value, corresponding to 0, after a reset.

The bit RTTINC in ST_SR is set each time the 20-bit counter is incremented. This bit can be used to start an interrupt, or generate a one-second signal.

Writing the ST_RTMR immediately reloads and restarts the clock divider with the new programmed value. This also resets the 20-bit counter.

Figure 13-4. Real-time Timer

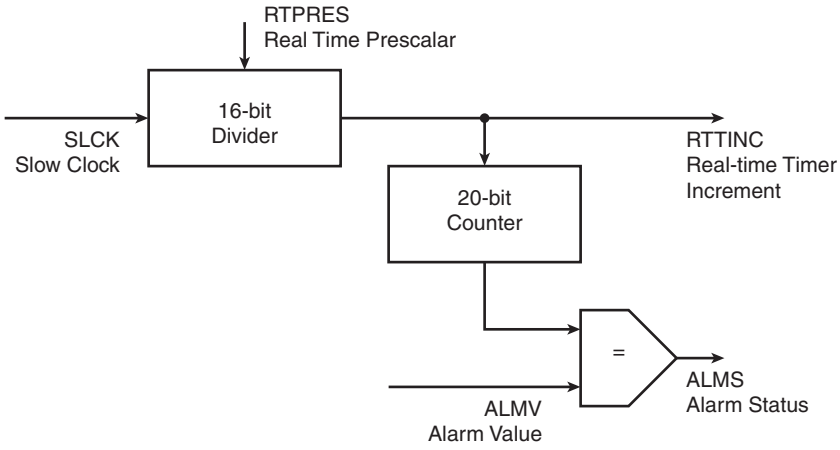

Note: If RTPRES is programmed with a period less or equal to the current MCK period, the update of the RTTINC and ALMS status bits and their associated interrupt generation are unpredictable.

13.4 System Timer User Interface

System Timer Base Address: 0xFFFF8000

Table 5. System Timer Registers

Offset	Register Name	Register Mnemonic	Access	Reset Value
0x00	Control Register	ST_CR	W	–
0x04	Period Interval Mode Register	ST_PIMR	R/W	0x00000000(1)
0x08	Watchdog Mode Register	ST_WDMR	R/W	0x00020000(1)
0x0C	Real-time Mode Register	ST_RTMR	R/W	0x00008000
0x10	Status Register	ST_SR	R	–
0x14	Interrupt Enable Register	ST_IER	W	–
0x18	Interrupt Disable Register	ST_IDR	W	–
0x1C	Interrupt Mask Register	ST_IMR	R	0x0
0x20	Real-time Alarm Register	ST_RTAR	R/W	0x0
0x24	Current Real-time Register	ST_CRTR	R	0x0

Note: 1. Corresponds to maximum value of the counter.

13.5 System Timer Control Register

Register Name: ST_CR
Access Type: Write-only
Offset: 0x00

31	30	29	28	27	26	25	24
–	–	–	–	–	–	–	–
23	22	21	20	19	18	17	16
–	–	–	–	–	–	–	–
15	14	13	12	11	10	9	8
–	–	–	–	–	–	–	–
7	6	5	4	3	2	1	0
–	–	–	–	–	–	–	WDRST

- **WDRST: Watchdog Timer Restart**

0 = No effect.

1 = Reload the start-up value in the Watchdog Timer.

13.6 System Timer Period Interval Mode Register

Register Name: ST_PIMR
Access Type: Read/Write
Offset: 0x04
Reset Value: 0x0

31	30	29	28	27	26	25	24
–	–	–	–	–	–	–	–
23	22	21	20	19	18	17	16
–	–	–	–	–	–	–	–
15	14	13	12	11	10	9	8
PIV							
7	6	5	4	3	2	1	0
PIV							

- **PIV: Period Interval Value**

Defines the value loaded in the 16-bit counter of the Period Interval Timer. The maximum period is obtained by programming PIV at 0x0 corresponding to 65536 Slow Clock cycles.

13.7 System Timer Watchdog Mode Register

Register Name: ST_WDMR
Access Type: Read/Write
Offset: 0x08
Reset Value: 0x0002 0000

31	30	29	28	27	26	25	24
–	–	–	–	–	–	–	–
23	22	21	20	19	18	17	16
–	–	–	–	–	–	EXTEN	RSTEN
15	14	13	12	11	10	9	8
WDV							
7	6	5	4	3	2	1	0
WDV							

- **WDV: Watchdog Counter Value**

Defines the value loaded in the 16-bit counter. The maximum period is obtained by programming WDV to 0x0 corresponding to 65536 • 128 Slow Clock cycles.

- **RSTEN: Reset Enable**

0 = No reset is generated when a watchdog overflow occurs.

1 = An internal reset is generated when a watchdog overflow occurs.

- **EXTEN: External Signal Assertion Enable**

0 = The NWDOVF is not tied low when a watchdog overflow occurs.

1 = The NWDOVF is tied low during 8 Slow Clock cycles when a watchdog overflow occurs.

13.8 System Timer Real-time Mode Register

Register Name: ST_RTMR
Access Type: Read/Write
Offset: 0x0C
Reset Value: 0x0000 8000

31	30	29	28	27	26	25	24
–	–	–	–	–	–	–	–
23	22	21	20	19	18	17	16
–	–	–	–	–	–	–	–
15	14	13	12	11	10	9	8
RTPRES							
7	6	5	4	3	2	1	0
RTPRES							

- **RTPRES: Real-time Timer Prescaler Value**

Defines the number of SLCK periods required to increment the Real-time Timer. The maximum period is obtained by programming RTPRES to 0x0 corresponding to 65536 Slow Clock cycles.

13.9 System Timer Status Register

Register Name: ST_SR
Access Type: Read-only
Offset: 0x10

31	30	29	28	27	26	25	24
–	–	–	–	–	–	–	–
23	22	21	20	19	18	17	16
–	–	–	–	–	–	–	–
15	14	13	12	11	10	9	8
–	–	–	–	–	–	–	–
7	6	5	4	3	2	1	0
–	–	–	–	ALMS	RTTINC	WDOVF	PITS

- **PITS: Period Interval Timer Status**

0 = The Period Interval Timer has not reached 0 since the last read of the Status Register.

1 = The Period Interval Timer has reached 0 since the last read of the Status Register.

- **WDOVF: Watchdog Overflow**

0 = The Watchdog Timer has not reached 0 since the last read of the Status Register.

1 = The Watchdog Timer has reached 0 since the last read of the Status Register.

- **RTTINC: Real-time Timer Increment**

0 = The Real-time Timer has not been incremented since the last read of the Status Register.

1 = The Real-time Timer has been incremented since the last read of the Status Register.

- **ALMS: Alarm Status**

0 = No alarm compare has been detected since the last read of the Status Register.

1 = Alarm compare has been detected since the last read of the Status Register.

13.10 System Timer Interrupt Enable Register

Register Name: ST_IER
Access Type: Write-only
Offset: 0x14

31	30	29	28	27	26	25	24
–	–	–	–	–	–	–	–
23	22	21	20	19	18	17	16
–	–	–	–	–	–	–	–
15	14	13	12	11	10	9	8
–	–	–	–	–	–	–	–
7	6	5	4	3	2	1	0
–	–	–	–	ALMS	RTTINC	WDOVF	PITS

- **PITS: Period Interval Timer Status Interrupt Enable**

0 = No effect.

1 = Enables the Period Interval Timer Status Interrupt.

- **WDOVF: Watchdog Overflow Interrupt Enable**

0 = No effect.

1 = Enables the Watchdog Overflow Interrupt.

- **RTTINC: Real-time Timer Increment Interrupt Enable**

0 = No effect.

1 = Enables the Real-time Timer Increment Interrupt.

- **ALMS: Alarm Status Interrupt Enable**

0 = No effect.

1 = Enables the Alarm Status Interrupt.

13.11 System Timer Interrupt Disable Register

Register Name: ST_IDR
Access Type: Write-only
Offset: 0x18

31	30	29	28	27	26	25	24
–	–	–	–	–	–	–	–
23	22	21	20	19	18	17	16
–	–	–	–	–	–	–	–
15	14	13	12	11	10	9	8
–	–	–	–	–	–	–	–
7	6	5	4	3	2	1	0
–	–	–	–	ALMS	RTTINC	WDOVF	PITS

- **PITS: Period Interval Timer Status Interrupt Disable**

0 = No effect.

1 = Disables the Period Interval Timer Status Interrupt.

- **WDOVF: Watchdog Overflow Interrupt Disable**

0 = No effect.

1 = Disables the Watchdog Overflow Interrupt.

- **RTTINC: Real-time Timer Increment Interrupt Disable**

0 = No effect.

1 = Disables the Real-time Timer Increment Interrupt.

- **ALMS: Alarm Status Interrupt Disable**

0 = No effect.

1 = Disables the Alarm Status Interrupt.

13.12 System Timer Interrupt Mask Register

Register Name: ST_IMR
Access Type: Read-only
Offset: 0x1C
Reset Value: 0x0

31	30	29	28	27	26	25	24
–	–	–	–	–	–	–	–
23	22	21	20	19	18	17	16
–	–	–	–	–	–	–	–
15	14	13	12	11	10	9	8
–	–	–	–	–	–	–	–
7	6	5	4	3	2	1	0
–	–	–	–	ALMS	RTTINC	WDOVF	PITS

- **PITS: Period Interval Timer Status Interrupt Mask**

0 = Period Interval Timer Status Interrupt is disabled.

1 = Period Interval Timer Status Interrupt is enabled.

- **WDOVF: Watchdog Overflow Interrupt Mask**

0 = Watchdog Overflow Interrupt is disabled.

1 = Watchdog Overflow Interrupt is enabled.

- **RTTINC: Real-time Timer Increment Interrupt Mask**

0 = Real-time Timer Increment Interrupt is disabled.

1 = Real-time Timer Increment Interrupt is enabled.

- **ALMS: Alarm Status Interrupt Mask**

0 = Alarm Status Interrupt is disabled.

1 = Alarm Status Interrupt is enabled.

13.13 System Timer Real-time Alarm Register

Register Name: ST_RTAR
Access Type: Read/Write
Offset: 0x20
Reset Value: 0x0

31	30	29	28	27	26	25	24
–	–	–	–	–	–	–	–
23	22	21	20	19	18	17	16
ALMV							
15	14	13	12	11	10	9	8
ALMV							
7	6	5	4	3	2	1	0
ALMV							

- **ALMV: Alarm Value**

Defines the Alarm value compared with the Real-time Timer. The maximum delay before ALMS status bit activation is obtained by programming ALMV to 0x0 corresponding to 1048576 seconds.

13.14 System Timer Current Real-time Register

Register Name: ST_CRTR
Access Type: Read-only
Offset: 0x24
Reset Value: 0x0

31	30	29	28	27	26	25	24
–	–	–	–	–	–	–	–
23	22	21	20	19	18	17	16
CRTV							
15	14	13	12	11	10	9	8
CRTV							
7	6	5	4	3	2	1	0
CRTV							

- **CRTV: Current Real-time Value**

Returns the current value of the Real-time Timer.

14. AIC: Advanced Interrupt Controller

The AT91M42800A has an 8-level priority, individually maskable, vectored interrupt controller. This feature substantially reduces the software and real-time overhead in handling internal and external interrupts.

The interrupt controller is connected to the NFIQ (fast interrupt request) and the NIRQ (standard interrupt request) inputs of the ARM7TDMI processor. The processor's NFIQ line can only be asserted by the external fast interrupt request input: FIQ. The NIRQ line can be asserted by the interrupts generated by the on-chip peripherals and the external interrupt request lines: IRQ0 to IRQ3.

The 8-level priority encoder allows the customer to define the priority between the different NIRQ interrupt sources.

Internal sources are programmed to be level sensitive or edge triggered. External sources can be programmed to be positive or negative edge triggered or high- or low-level sensitive.

The interrupt sources are listed in Table 14-1 and the AIC programmable registers in Table 6.

Figure 14-1. Interrupt Controller Block Diagram

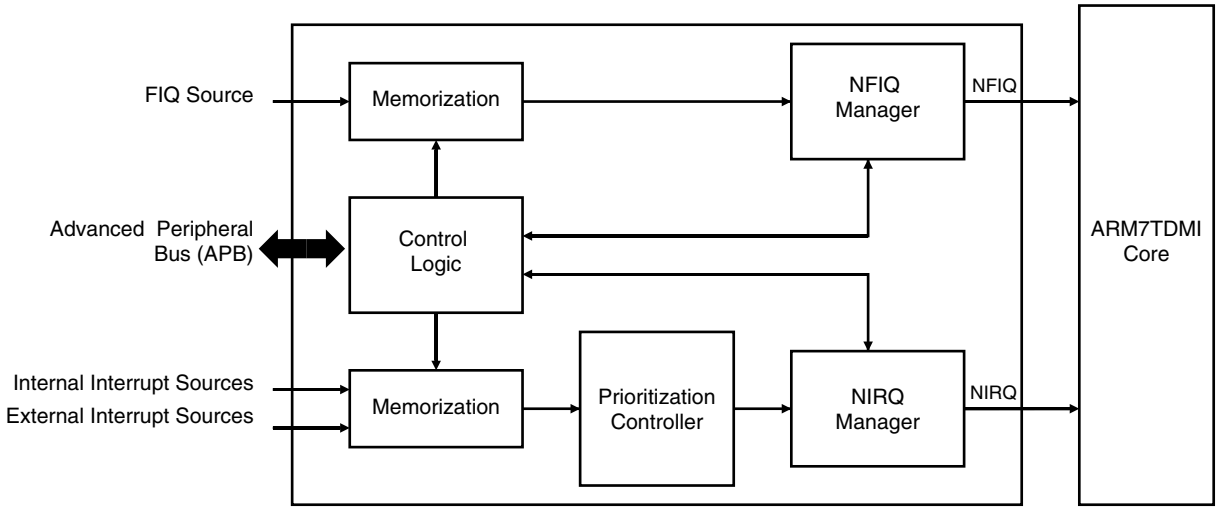

Note: After a hardware reset, the external interrupt sources pins are controlled by the Controller. They must be configured to be controlled by the peripheral before being used.

Table 14-1. AIC Interrupt Sources

Interrupt Source	Interrupt Name	Interrupt Description
0	FIQ	Fast Interrupt
1	SW	Soft Interrupt (generated by the AIC)
2	US0	USART Channel 0 interrupt
3	US1	USART Channel 1 interrupt
4	SPIA	SPI Channel A Interrupt
5	SPIB	SPI Channel B Interrupt
6	TC0	Timer Channel 0 Interrupt
7	TC1	Timer Channel 1 Interrupt
8	TC2	Timer Channel 2 Interrupt
9	TC3	Timer Channel 3 Interrupt
10	TC4	Timer Channel 4 Interrupt
11	TC5	Timer Channel 5 Interrupt
12	ST	System Timer Interrupt
13	PIOA	Parallel I/O Controller A Interrupt
14	PIOB	Parallel I/O Controller B Interrupt
15	PMC	Power Management Controller Interrupt
16	–	Reserved
17	–	Reserved
18	–	Reserved
19	–	Reserved
20	–	Reserved
21	–	Reserved
22	–	Reserved
23	–	Reserved
24	–	Reserved
25	–	Reserved
26	–	Reserved
27	–	Reserved
28	IRQ3	External Interrupt 3
29	IRQ2	External Interrupt 2
30	IRQ1	External Interrupt 1
31	IRQ0	External Interrupt 0

14.1 Hardware Interrupt Vectoring

The hardware interrupt vectoring reduces the number of instructions to reach the interrupt handler to only one. By storing the following instruction at address 0x00000018, the processor

loads the program counter with the interrupt handler address stored in the AIC_IVR register. Execution is then vectored to the interrupt handler corresponding to the current interrupt.

```
ldr PC,[PC,# -&F20]
```

The current interrupt is the interrupt with the highest priority when the Interrupt Vector Register (AIC_IVR) is read. The value read in the AIC_IVR corresponds to the address stored in the Source Vector Register (AIC_SVR) of the current interrupt. Each interrupt source has its corresponding AIC_SVR. In order to take advantage of the hardware interrupt vectoring it is necessary to store the address of each interrupt handler in the corresponding AIC_SVR, at system initialization.

14.2 Priority Controller

The NIRQ line is controlled by an 8-level priority encoder. Each source has a programmable priority level of 7 to 0. Level 7 is the highest priority and level 0 the lowest.

When the AIC receives more than one unmasked interrupt at a time, the interrupt with the highest priority is serviced first. If both interrupts have equal priority, the interrupt with the lowest interrupt source number (see Table 14-1) is serviced first.

The current priority level is defined as the priority level of the current interrupt at the time the register AIC_IVR is read (the interrupt which will be serviced).

In the case when a higher priority unmasked interrupt occurs while an interrupt already exists, there are two possible outcomes depending on whether the AIC_IVR has been read.

- If the NIRQ line has been asserted but the AIC_IVR has not been read, then the processor will read the new higher priority interrupt handler address in the AIC_IVR register and the current interrupt level is updated.
- If the processor has already read the AIC_IVR then the NIRQ line is reasserted. When the processor has authorized nested interrupts to occur and reads the AIC_IVR again, it reads the new, higher priority interrupt handler address. At the same time the current priority value is pushed onto a first-in last-out stack and the current priority is updated to the higher priority.

When the end of interrupt command register (AIC_EOICR) is written, the current interrupt level is updated with the last stored interrupt level from the stack (if any). Hence at the end of a higher priority interrupt, the AIC returns to the previous state corresponding to the preceding lower priority interrupt which had been interrupted.

14.3 Interrupt Handling

The interrupt handler must read the AIC_IVR as soon as possible. This de-asserts the NIRQ request to the processor and clears the interrupt in case it is programmed to be edge triggered. This permits the AIC to assert the NIRQ line again when a higher priority unmasked interrupt occurs.

At the end of the interrupt service routine, the end of interrupt command register (AIC_EOICR) must be written. This allows pending interrupts to be serviced.

14.4 Interrupt Masking

Each interrupt source, including FIQ, can be enabled or disabled using the command registers AIC_IECR and AIC_IDCR. The interrupt mask can be read in the Read-only register AIC_IMR. A disabled interrupt does not affect the servicing of other interrupts.

14.5 Interrupt Clearing and Setting

All interrupt sources which are programmed to be edge triggered (including FIQ) can be individually set or cleared by respectively writing to the registers AIC_ISCR and AIC_ICCR. This function of the interrupt controller is available for auto-test or software debug purposes.

14.6 Fast Interrupt Request

The external FIQ line is the only source which can raise a fast interrupt request to the processor. Therefore, it has no priority controller.

The external FIQ line can be programmed to be positive or negative edge triggered or high- or low-level sensitive in the AIC_SMR0 register.

The fast interrupt handler address can be stored in the AIC_SVR0 register. The value written into this register is available by reading the AIC_FVR register when an FIQ interrupt is raised. By storing the following instruction at address 0x0000001C, the processor will load the program counter with the interrupt handler address stored in the AIC_FVR register.

```
ldr PC,[PC,# -&F20]
```

Alternatively the interrupt handler can be stored starting from address 0x0000001C as described in the ARM7TDMI datasheet.

14.7 Software Interrupt

Interrupt source 1 of the advanced interrupt controller is a software interrupt. It must be programmed to be edge triggered in order to set or clear it by writing to the AIC_ISCR and AIC_ICCR.

This is totally independent of the SWI instruction of the ARM7TDMI processor.

14.8 Spurious Interrupt

When the AIC asserts the NIRQ line, the ARM7TDMI enters IRQ mode and the interrupt handler reads the IVR. It may happen that the AIC de-asserts the NIRQ line after the core has taken into account the NIRQ assertion and before the read of the IVR.

This behavior is called a Spurious Interrupt.

The AIC is able to detect these Spurious Interrupts and returns the Spurious Vector when the IVR is read. The Spurious Vector can be programmed by the user when the vector table is initialized.

A spurious interrupt may occur in the following cases:

- With any sources programmed to be level sensitive, if the interrupt signal of the AIC input is de-asserted at the same time as it is taken into account by the ARM7TDMI.
- If an interrupt is asserted at the same time as the software is disabling the corresponding source through AIC_IDCR (this can happen due to the pipelining of the ARM core).

The same mechanism of spurious interrupt occurs if the ARM7TDMI reads the IVR (application software or ICE) when there is no interrupt pending. This mechanism is also valid for the FIQ interrupts.

Once the AIC enters the spurious interrupt management, it asserts neither the NIRQ nor the NFIQ lines to the ARM7TDMI as long as the spurious interrupt is not acknowledged. Therefore, it is mandatory for the Spurious Interrupt Service Routine to acknowledge the “spurious”

behavior by writing to the AIC_EOICR (End of Interrupt) before returning to the interrupted software. It also can perform other operation(s), e.g., trace possible undesirable behavior.

14.9 Protect Mode

The Protect Mode permits reading of the Interrupt Vector Register without performing the associated automatic operations. This is necessary when working with a debug system.

When a Debug Monitor or an ICE reads the AIC User Interface, the IVR could be read. This would have the following consequences in normal mode.

- If an enabled interrupt with a higher priority than the current one is pending, it is stacked.
- If there is no enabled pending interrupt, the spurious vector is returned.

In either case, an End of Interrupt command would be necessary to acknowledge and to restore the context of the AIC. This operation is generally not performed by the debug system. Hence the debug system would become strongly intrusive, and could cause the application to enter an undesired state.

This is avoided by using Protect mode.

The Protect mode is enabled by setting the AIC bit in the SF Protect Mode Register (see "SF: Special Function Registers" on page 115).

When Protect mode is enabled, the AIC performs interrupt stacking only when a write access is performed on the AIC_IVR. Therefore, the Interrupt Service Routines must write (arbitrary data) to the AIC_IVR just after reading it.

The new context of the AIC, including the value of the Interrupt Status Register (AIC_ISR), is updated with the current interrupt only when IVR is written.

An AIC_IVR read on its own (e.g., by a debugger), modifies neither the AIC context nor the AIC_ISR.

Extra AIC_IVR reads performed in between the read and the write can cause unpredictable results. Therefore, it is strongly recommended not to set a breakpoint between these two actions, nor to stop the software.

The debug system must not write to the AIC_IVR as this would cause undesirable effects.

The following table shows the main steps of an interrupt and the order in which they are performed according to the mode:

Action	Normal Mode	Protect Mode
Calculate active interrupt (higher than current or spurious)	Read AIC_IVR	Read AIC_IVR
Determine and return the vector of the active interrupt	Read AIC_IVR	Read AIC_IVR
Memorize interrupt	Read AIC_IVR	Read AIC_IVR
Push on internal stack the current priority level	Read AIC_IVR	Write AIC_IVR
Acknowledge the interrupt(1)	Read AIC_IVR	Write AIC_IVR
No effect(2)	Write AIC_IVR	–

Notes:
1. NIRQ de-assertion and automatic interrupt clearing if the source is programmed as level sensitive.
2. Software that has been written and debugged using Protect mode will run correctly in Normal mode without modification. However, in Normal mode, the AIC_IVR write has no effect and can be removed to optimize the code.

14.10 AIC User Interface

Base Address: 0xFFFFF000 (Code Label `AIC_BASE`)

Table 6. AIC Memory Map

Offset	Register	Name	Access	Reset State
0x000	Source Mode Register 0	AIC_SMR0	Read/Write	0
0x004	Source Mode Register 1	AIC_SMR1	Read/Write	0
–	–	–	Read/Write	0
0x07C	Source Mode Register 31	AIC_SMR31	Read/Write	0
0x080	Source Vector Register 0	AIC_SVR0	Read/Write	0
0x084	Source Vector Register 1	AIC_SVR1	Read/Write	0
–	–	–	Read/Write	0
0x0FC	Source Vector Register 31	AIC_SVR31	Read/Write	0
0x100	IRQ Vector Register	AIC_IVR	Read-only	–
0x104	FIQ Vector Register	AIC_FVR	Read-only	–
0x108	Interrupt Status Register	AIC_ISR	Read-only	–
0x10C	Interrupt Pending Register	AIC_IPR	Read-only	(see [1])
0x110	Interrupt Mask Register	AIC_IMR	Read-only	0
0x114	Core Interrupt Status Register	AIC_CISR	Read-only	–
0x118	Reserved	–	–	–
0x11C	Reserved	–	–	–
0x120	Interrupt Enable Command Register	AIC_IECR	Write-only	–
0x124	Interrupt Disable Command Register	AIC_IDCR	Write-only	–
0x128	Interrupt Clear Command Register	AIC_ICCR	Write-only	–
0x12C	Interrupt Set Command Register	AIC_ISCR	Write-only	–
0x130	End of Interrupt Command Register	AIC_EOICR	Write-only	–
0x134	Spurious Vector Register	AIC_SPU	Read/Write	0

Note: 1. The reset value of this register depends on the level of the External IRQ lines. All other sources are cleared at reset.

14.11 AIC Source Mode Register

Register Name: AIC_SMR0..AIC_SMR31
Access Type: Read/Write
Reset Value: 0

31	30	29	28	27	26	25	24
–	–	–	–	–	–	–	–
23	22	21	20	19	18	17	16
–	–	–	–	–	–	–	–
15	14	13	12	11	10	9	8
–	–	–	–	–	–	–	–
7	6	5	4	3	2	1	0
–	SRCTYPE		–	–	PRIOR		

- **PRIOR: Priority Level (Code Label `AIC_PRIOR`)**

Program the priority level for all sources except source 0 (FIQ).
The priority level can be between 0 (lowest) and 7 (highest).
The priority level is not used for the FIQ, in the SMR0.

- **SRCTYPE: Interrupt Source Type (Code Label `AIC_SRCTYPE`)**

Program the input to be positive or negative edge-triggered or positive or negative level sensitive.
The active level or edge is not programmable for the internal sources.

SRCTYPE		External Sources	Code Label
0	0	Low-level Sensitive	AIC_SRCTYPE_EXT_LOW_LEVEL
0	1	Negative Edge triggered	AIC_SRCTYPE_EXT_NEGATIVE_EDGE
1	0	High-level Sensitive	AIC_SRCTYPE_EXT_HIGH_LEVEL
1	1	Positive Edge triggered	AIC_SRCTYPE_EXT_POSITIVE_EDGE

SRCTYPE		Internal Sources	Code Label
X	0	Level Sensitive	AIC_SRCTYPE_INT_LEVEL_SENSITIVE
X	1	Edge triggered	AIC_SRCTYPE_INT_EDGE_TRIGGERED

14.12 AIC Source Vector Register

Register Name: AIC_SVR0..AIC_SVR31
Access Type: Read/Write
Reset Value: 0

31	30	29	28	27	26	25	24
VECTOR							
23	22	21	20	19	18	17	16
VECTOR							
15	14	13	12	11	10	9	8
VECTOR							
7	6	5	4	3	2	1	0
VECTOR							

- **VECTOR: Interrupt Handler Address**

The user may store in these registers the addresses of the corresponding handler for each interrupt source.

14.13 AIC Interrupt Vector Register

Register Name: AIC_IVR
Access Type: Read-only
Offset: 0x100

31	30	29	28	27	26	25	24
IRQV							
23	22	21	20	19	18	17	16
IRQV							
15	14	13	12	11	10	9	8
IRQV							
7	6	5	4	3	2	1	0
IRQV							

- **IRQV: Interrupt Vector Register**

The IRQ Vector Register contains the vector programmed by the user in the Source Vector Register corresponding to the current interrupt.

The Source Vector Register (1 to 31) is indexed using the current interrupt number when the Interrupt Vector Register is read.

When there is no current interrupt, the IRQ Vector Register reads the value stored in AIC_SPU.

14.14 AIC FIQ Vector Register

Register Name: AIC_FVR
Access Type: Read-only
Offset: 0x104

31	30	29	28	27	26	25	24
FIQV							

23	22	21	20	19	18	17	16
FIQV							

15	14	13	12	11	10	9	8
FIQV							

7	6	5	4	3	2	1	0
FIQV							

- **FIQV: FIQ Vector Register**

The FIQ Vector Register contains the vector programmed by the user in the Source Vector Register 0 which corresponds to FIQ.

14.15 AIC Interrupt Status Register

Register Name: AIC_ISR
Access Type: Read-only
Offset: 0x108

31	30	29	28	27	26	25	24
–	–	–	—	–	–	–	–

23	22	21	20	19	18	17	16
–	–	–	–	–	–	–	–

15	14	13	12	11	10	9	8
–	–	–	–	–	–	–	–

7	6	5	4	3	2	1	0
–	–	–	IRQID				

- **IRQID: Current IRQ Identifier (Code Label `AIC_IRQID`)**

The Interrupt Status Register returns the current interrupt source number.

14.16 AIC Interrupt Pending Register

Register Name: AIC_IPR
Access Type: Read-only
Offset: 0x10C

31	30	29	28	27	26	25	24
IRQ0	IRQ1	IRQ2	IRQ3	–	–	–	–
23	22	21	20	19	18	17	16
–	–	–	–	–	–	–	–
15	14	13	12	11	10	9	8
PMC	PIOB	PIOA	ST	TC5	TC4	TC3	TC2
7	6	5	4	3	2	1	0
TC1	TC0	SPIB	SPIA	US1	US0	SW	FIQ

- **Interrupt Pending**

0 = Corresponding interrupt is inactive.

1 = Corresponding interrupt is pending.

14.17 AIC Interrupt Mask Register

Register Name: AIC_IMR
Access Type: Read-only
Offset: 0x110
Reset Value: 0x0

31	30	29	28	27	26	25	24
IRQ0	IRQ1	IRQ2	IRQ3	–	–	–	–
23	22	21	20	19	18	17	16
–	–	–	–	–	–	–	–
15	14	13	12	11	10	9	8
PMC	PIOB	PIOA	ST	TC5	TC4	TC3	TC2
7	6	5	4	3	2	1	0
TC1	TC0	SPIB	SPIA	US1	US0	SW	FIQ

- **Interrupt Mask**

0 = Corresponding interrupt is disabled.

1 = Corresponding interrupt is enabled.

14.18 AIC Core Interrupt Status Register

Register Name: AIC_CISR
Access Type: Read-only
Offset: 0x114

31	30	29	28	27	26	25	24
–	–	–	–	–	–	–	–
23	22	21	20	19	18	17	16
–	–	–	–	–	–	–	–
15	14	13	12	11	10	9	8
–	–	–	–	–	–	–	–
7	6	5	4	3	2	1	0
–	–	–	–	–	–	NIRQ	NFIQ

- **NFIQ: NFIQ Status (Code Label `AIC_NFIQ`)**

0 = NFIQ line inactive.

1 = NFIQ line active.

- **NIRQ: NIRQ Status (Code Label `AIC_NIRQ`)**

0 = NIRQ line inactive.

1 = NIRQ line active.

14.19 AIC Interrupt Enable Command Register

Register Name: AIC_IECR
Access Type: Write-only
Offset: 0x120

31	30	29	28	27	26	25	24
IRQ0	IRQ1	IRQ2	IRQ3	–	–	–	–
23	22	21	20	19	18	17	16
–	–	–	–	–	–	–	–
15	14	13	12	11	10	9	8
PMC	PIOB	PIOA	ST	TC5	TC4	TC3	TC2
7	6	5	4	3	2	1	0
TC1	TC0	SPIB	SPIA	US1	US0	SW	FIQ

- **Interrupt Enable**

0 = No effect.

1 = Enables corresponding interrupt.

14.20 AIC Interrupt Disable Command Register

Register Name: AIC_IDCR
Access Type: Write-only
Offset: 0x124

31	30	29	28	27	26	25	24
IRQ0	IRQ1	IRQ2	IRQ3	–	–	–	–
23	22	21	20	19	18	17	16
–	–	–	–	–	–	–	–
15	14	13	12	11	10	9	8
PMC	PIOB	PIOA	ST	TC5	TC4	TC3	TC2
7	6	5	4	3	2	1	0
TC1	TC0	SPIB	SPIA	US1	US0	SW	FIQ

- **Interrupt Disable**

0 = No effect.

1 = Disables corresponding interrupt.

14.21 AIC Interrupt Clear Command Register

Register Name: AIC_ICCR
Access Type: Write-only
Offset: 0x128

31	30	29	28	27	26	25	24
IRQ0	IRQ1	IRQ2	IRQ3	–	–	–	–
23	22	21	20	19	18	17	16
–	–	–	–	–	–	–	–
15	14	13	12	11	10	9	8
PMC	PIOB	PIOA	ST	TC5	TC4	TC3	TC2
7	6	5	4	3	2	1	0
TC1	TC0	SPIB	SPIA	US1	US0	SW	FIQ

- **Interrupt Clear**

0 = No effect.

1 = Clears corresponding interrupt.

14.22 AIC Interrupt Set Command Register

Register Name: AIC_ISCR
Access Type: Write-only
Offset: 0x12C

31	30	29	28	27	26	25	24
IRQ0	IRQ1	IRQ2	IRQ3	–	–	–	–
23	22	21	20	19	18	17	16
–	–	–	–	–	–	–	–
15	14	13	12	11	10	9	8
PMC	PIOB	PIOA	ST	TC5	TC4	TC3	TC2
7	6	5	4	3	2	1	0
TC1	TC0	SPIB	SPIA	US1	US0	SW	FIQ

- **Interrupt Set**

0 = No effect.

1 = Sets corresponding interrupt.

14.23 AIC End of Interrupt Command Register

Register Name: AIC_EOICR
Access Type: Write-only
Offset: 0x130

31	30	29	28	27	26	25	24
–	–	–	–	–	–	–	–
23	22	21	20	19	18	17	16
–	–	–	–	–	–	–	–
15	14	13	12	11	10	9	8
–	–	–	–	–	–	–	–
7	6	5	4	3	2	1	0
–	–	–	–	–	–	–	–

The End of Interrupt Command Register is used by the interrupt routine to indicate that the interrupt treatment is complete. Any value can be written because it is only necessary to make a write to this register location to signal the end of interrupt treatment.

14.24 AIC Spurious Vector Register

Register Name: AIC_SPU
Access Type: Read/Write
Offset: 0x134
Reset Value: 0

31	30	29	28	27	26	25	24
SPUVEC							
23	22	21	20	19	18	17	16
SPUVEC							
15	14	13	12	11	10	9	8
SPUVEC							
7	6	5	4	3	2	1	0
SPUVEC							

- **SPUVEC: Spurious Interrupt Vector Handler Address**

The user may store the address of the spurious interrupt handler in this register.

14.25 Standard Interrupt Sequence

It is assumed that:

- The Advanced Interrupt Controller has been programmed, AIC_SVR are loaded with corresponding interrupt service routine addresses and interrupts are enabled.
- The Instruction at address 0x18(IRQ exception vector address) is

```
ldr pc, [pc, #-&F20]
```

When NIRQ is asserted, if the bit I of CPSR is 0, the sequence is:

1. The CPSR is stored in SPSR_irq, the current value of the Program Counter is loaded in the IRQ link register (R14_irq) and the Program Counter (R15) is loaded with 0x18. In the following cycle during fetch at address 0x1C, the ARM core adjusts R14_irq, decrementing it by 4.
2. The ARM core enters IRQ mode, if it is not already.
3. When the instruction loaded at address 0x18 is executed, the Program Counter is loaded with the value read in AIC_IVR. Reading the AIC_IVR has the following effects:
   - Set the current interrupt to be the pending one with the highest priority. The current level is the priority level of the current interrupt.
   - De-assert the NIRQ line on the processor. (Even if vectoring is not used, AIC_IVR must be read in order to de-assert NIRQ)
   - Automatically clear the interrupt, if it has been programmed to be edge triggered.
   - Push the current level on to the stack.
   - Return the value written in the AIC_SVR corresponding to the current interrupt.
4. The previous step has effect to branch to the corresponding interrupt service routine. This should start by saving the Link Register(R14_irq) and the SPSR(SPSR_irq). Note that the Link Register must be decremented by 4 when it is saved, if it is to be restored directly into the Program Counter at the end of the interrupt.
5. Further interrupts can then be unmasked by clearing the I-bit in the CPSR, allowing re-assertion of the NIRQ to be taken into account by the core. This can occur if an interrupt with a higher priority than the current one occurs.
6. The Interrupt Handler can then proceed as required, saving the registers which will be used and restoring them at the end. During this phase, an interrupt of priority higher than the current level will restart the sequence from step 1. Note that if the interrupt is programmed to be level sensitive, the source of the interrupt must be cleared during this phase.
7. The I-bit in the CPSR must be set in order to mask interrupts before exiting, to ensure that the interrupt is completed in an orderly manner.
8. The End of Interrupt Command Register (AIC_EOICR) must be written in order to indicate to the AIC that the current interrupt is finished. This causes the current level to be popped from the stack, restoring the previous current level if one exists on the stack. If another interrupt is pending, with lower or equal priority than old current level but with higher priority than the new current level, the NIRQ line is re-asserted, but the interrupt sequence does not immediately start because the I-bit is set in the core.

9. The SPSR (SPSR_irq) is restored. Finally, the saved value of the Link Register is restored directly into the PC. This has effect of returning from the interrupt to whatever was being executed before, and of loading the CPSR with the stored SPSR, masking or unmasking the interrupts depending on the state saved in the SPSR (the previous state of the ARM core).

Note: The I-bit in the SPSR is significant. If it is set, it indicates that the ARM core was just about to mask IRQ interrupts when the mask instruction was interrupted. Hence, when the SPSR is restored, the mask instruction is completed (IRQ is masked).

14.26 Fast Interrupt Sequence

It is assumed that:

- The Advanced Interrupt Controller has been programmed, AIC_SVR[0] is loaded with fast interrupt service routine address and the fast interrupt is enabled.
- The Instruction at address 0x1C(FIQ exception vector address) is:

```
ldr pc, [pc, #-&F20]
```

- Nested Fast Interrupts are not needed by the user.

When NFIQ is asserted, if the F-bit of CPSR is 0, the sequence is:

1. The CPSR is stored in SPSR_fiq, the current value of the Program Counter is loaded in the FIQ link register (R14_fiq) and the Program Counter (R15) is loaded with 0x1C. In the following cycle, during fetch at address 0x20, the ARM core adjusts R14_fiq, decrementing it by 4.
2. The ARM core enters FIQ mode.
3. When the instruction loaded at address 0x1C is executed, the Program Counter is loaded with the value read in AIC_FVR. Reading the AIC_FVR has effect of automatically clearing the fast interrupt (source 0 connected to the FIQ line), if it has been programmed to be edge triggered. In this case only, it de-asserts the NFIQ line on the processor.
4. The previous step has effect to branch to the corresponding interrupt service routine. It is not necessary to save the Link Register(R14_fiq) and the SPSR(SPSR_fiq) if nested fast interrupts are not needed.
5. The Interrupt Handler can then proceed as required. It is not necessary to save registers R8 to R13 because FIQ mode has its own dedicated registers and the user R8 to R13 are banked. The other registers, R0 to R7, must be saved before being used, and restored at the end (before the next step). Note that if the fast interrupt is programmed to be level sensitive, the source of the interrupt must be cleared during this phase in order to de-assert the NFIQ line.
6. Finally, the Link Register (R14_fiq) is restored into the PC after decrementing it by 4 (with instruction sub pc, lr, #4 for example). This has effect of returning from the interrupt to whatever was being executed before, and of loading the CPSR with the SPSR, masking or unmasking the fast interrupt depending on the state saved in the SPSR.

Note: The F-bit in the SPSR is significant. If it is set, it indicates that the ARM core was just about to mask FIQ interrupts when the mask instruction was interrupted. Hence when the SPSR is restored, the interrupted instruction is completed (FIQ is masked).

15. PIO: Parallel I/O Controller

The AT91M42800A has 54 programmable I/O lines. I/O lines are multiplexed with an external signal of a peripheral to optimize the use of available package pins (see Tables Table 15-1 on page 100 and Table 15-2 on page 101). These lines are controlled by two separate and identical PIO Controllers called PIOA and PIOB. Each PIO controller also provides an internal interrupt signal to the Advanced Interrupt Controller.

Note: After a hardware reset, the PIO clock is disabled by default (see Section 12. "PMC: Power Management Controller" on page 55). The user must configure the Power Management Controller before any access to the User Interface of the PIO.

15.1 Multiplexed I/O Lines

When a peripheral signal is not used in an application, the corresponding pin can be used as a parallel I/O. Each parallel I/O line is bi-directional, whether the peripheral defines the signal as input or output. Figure 15-1 shows the multiplexing of the peripheral signals with Parallel I/O signals.

A pin is controlled by the registers PIO_PER (PIO Enable) and PIO_PDR (PIO Disable). The register PIO_PSR (PIO Status) indicates whether the pin is controlled by the corresponding peripheral or by the PIO Controller.

When the PIO is selected, the peripheral input line is connected to zero.

15.2 Output Selection

The user can enable each individual I/O signal as an output with the registers PIO_OER (Output Enable) and PIO_ODR (Output Disable). The output status of the I/O signals can be read in the register PIO_OSR (Output Status). The direction defined has effect only if the pin is configured to be controlled by the PIO Controller.

15.3 I/O Levels

Each pin can be configured to be driven high or low. The level is defined in four different ways, according to the following conditions.

- If a pin is controlled by the PIO Controller and is defined as an output (see Section 15.2 "Output Selection" on page 97 above), the level is programmed using the registers PIO_SODR (Set Output Data) and PIO_CODR (Clear Output Data). In this case, the programmed value can be read in PIO_ODSR (Output Data Status).
- If a pin is controlled by the PIO Controller and is not defined as an output, the level is determined by the external circuit.
- If a pin is not controlled by the PIO Controller, the state of the pin is defined by the peripheral (see peripheral datasheets).

In all cases, the level on the pin can be read in the register PIO_PDSR (Pin Data Status).

15.4 Filters

Optional input glitch filtering is available on each pin and is controlled by the registers PIO_IFER (Input Filter Enable) and PIO_IFDR (Input Filter Disable). The input glitch filtering can be selected whether the pin is used for its peripheral function or as a parallel I/O line. The register PIO_IFSR (Input Filter Status) indicates whether or not the filter is activated for each pin.

15.5 Interrupts

Each parallel I/O can be programmed to generate an interrupt when a level change occurs. This is controlled by the PIO_IER (Interrupt Enable) and PIO_IDR (Interrupt Disable) registers which enable/disable the I/O interrupt by setting/clearing the corresponding bit in the PIO_IMR. When a change in level occurs, the corresponding bit in the PIO_ISR (Interrupt Status) is set whether the pin is used as a PIO or a peripheral and whether it is defined as input or output. If the corresponding interrupt in PIO_IMR (Interrupt Mask) is enabled, the PIO interrupt is asserted.

When PIO_ISR is read, the register is automatically cleared.

15.6 User Interface

Each individual I/O is associated with a bit position in the Parallel I/O user interface registers. Each of these registers are 32 bits wide. If a parallel I/O line is not defined, writing to the corresponding bits has no effect. Undefined bits read zero.

15.7 Multi-driver (Open Drain)

Each I/O can be programmed for multi-driver option. This means that the I/O is configured as open drain (can only drive a low level) in order to support external drivers on the same pin. An external pull-up is necessary to guarantee a logic level of one when the pin is not being driven.

Registers PIO_MDER (Multi-Driver Enable) and PIO_MDDR (Multi-Driver Disable) control this option. Multi-driver can be selected whether the I/O pin is controlled by the PIO Controller or the peripheral. PIO_MDSR (Multi-Driver Status) indicates which pins are configured to support external drivers.

Figure 15-1. Parallel I/O Multiplexed with a Bi-directional Signal

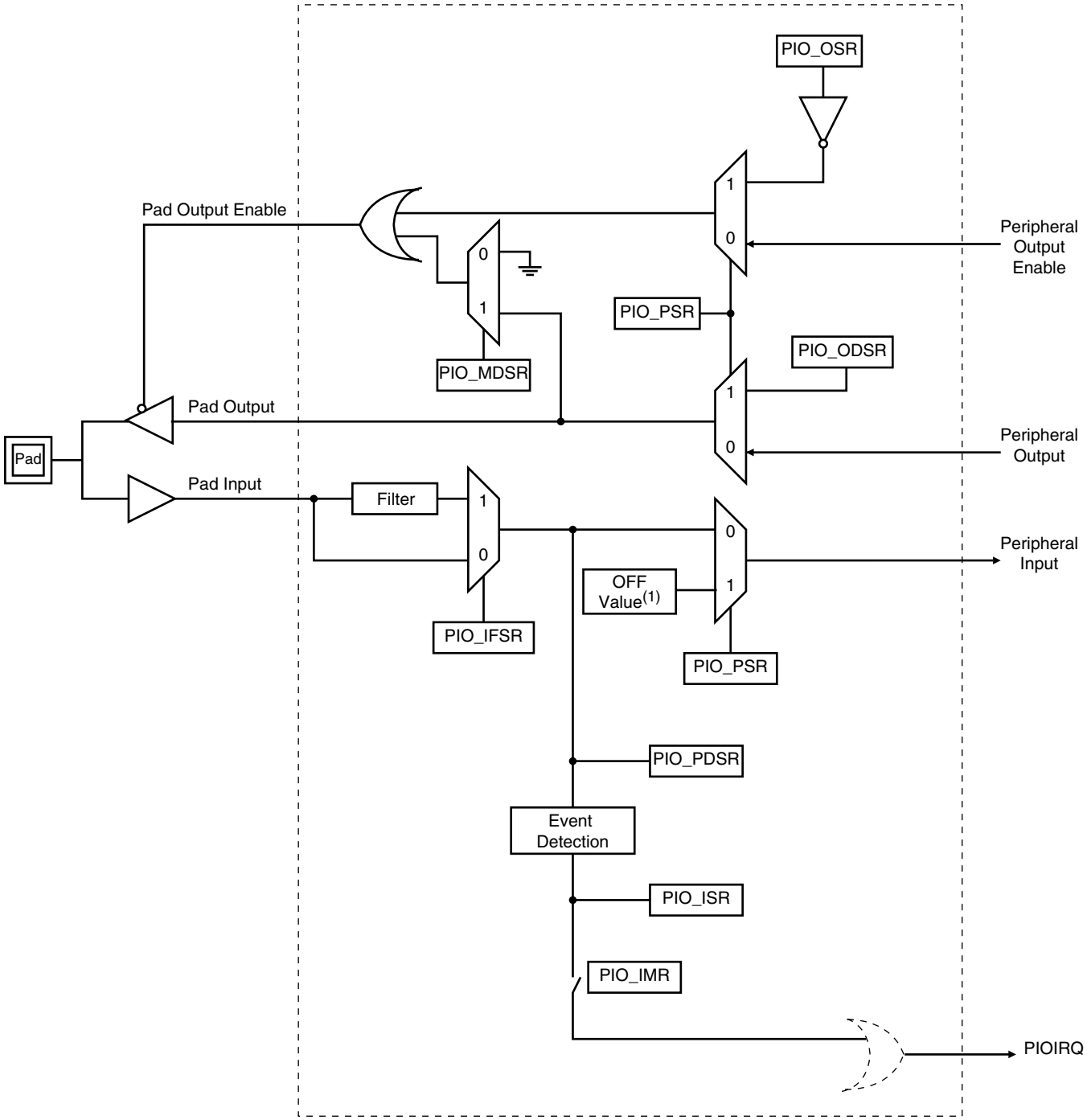

Note: 1. See Section 15.8 "PIO Connection Tables" on page 100.

15.8 PIO Connection Tables

Table 15-1. PIO Controller A Connection Table

PIO Controller		Peripheral					
Bit Number	Port Name	Port Name	Signal Description	Signal Direction	OFF[1] Value	Reset State	Pin Number
0	PA0	IRQ0	External Interrupt 0	Input	0	PIO Input	77
1	PA1	IRQ1	External Interrupt 1	Input	0	PIO Input	78
2	PA2	IRQ2	External Interrupt 2	Input	0	PIO Input	79
3	PA3	IRQ3	External Interrupt 3	Input	0	PIO Input	80
4	PA4	FIQ	Fast Interrupt	Input	0	PIO Input	81
5	PA5	SCK0	USART0 Clock Signal	Bi-directional	0	PIO Input	82
6	PA6	TXD0	USART0 Transmit Data Signal	Output	–	PIO Input	83
7	PA7	RXD0	USART0 Receive Data Signal	Input	0	PIO Input	86
8	PA8	SCK1	USART1 Clock Signal	Bi-directional	0	PIO Input	87
9	PA9	TXD1/NTRI	USART1 Transmit Data Signal	Output	–	PIO Input	88
10	PA10	RXD1	USART1 Receive Data Signal	Input	0	PIO Input	89
11	PA11	SPCKA	SPIA Clock Signal	Bi-directional	0	PIO Input	90
12	PA12	MISOA	SPIA Master In Slave Out	Bi-directional	0	PIO Input	91
13	PA13	MOSIA	SPIA Master Out Slave In	Bi-directional	0	PIO Input	92
14	PA14	NPCSA0/NSSA	SPIA Peripheral Chip Select 0	Bi-directional	1	PIO Input	93
15	PA15	NPCSA1	SPIA Peripheral Chip Select 1	Output	–	PIO Input	94
16	PA16	NPCSA2	SPIA Peripheral Chip Select 2	Output	–	PIO Input	95
17	PA17	NPCSA3	SPIA Peripheral Chip Select 3	Output	–	PIO Input	98
18	PA18	SPCKB	SPIB Clock Signal	Bi-directional	0	PIO Input	99
19	PA19	MISOB	SPIB Master In Slave Out	Bi-directional	0	PIO Input	100
20	PA20	MOSIB	SPIB Master Out Slave In	Bi-directional	0	PIO Input	101
21	PA21	NPCSB0/NSSB	SPIB Peripheral Chip Select 0	Bi-directional	1	PIO Input	102
22	PA22	NPCSB1	SPIB Peripheral Chip Select 1	Output	–	PIO Input	103
23	PA23	NPCSB2	SPIB Peripheral Chip Select 2	Output	–	PIO Input	104
24	PA24	NPCSB3	SPIB Peripheral Chip Select 3	Output	–	PIO Input	105
25	PA25	MCKO	Master Clock Output	Output	–	MCKO	106
26	PA26	–	–	–	–	PIO Input	111
27	PA27	BMS	Boot Mode Select	Input	0	PIO Input	123
28	PA28	–	–	Output	–	PIO Input	131
29	PA29	PME	Protect Mode Enable	Input	0	PIO Input	134

Note: 1. The OFF value is the default level seen on the peripheral input when the PIO line is enabled.

Table 15-2. PIO Controller B Connection Table

PIO Controller		Peripheral					
Bit Number	Port Name	Port Name	Signal Description	Signal Direction	OFF[1] Value	Reset State	Pin Number
0	PB0	NCS2	Chip Select 2	Output	–	NCS2	141
1	PB1	NCS3	Chip Select 3	Output	–	NCS3	142
2	PB2	A20/CS7	Address 20/Chip Select 7	Output	–	A20	27
3	PB3	A21/CS6	Address 21/Chip Select 6	Output	–	A21	28
4	PB4	A22/CS5	Address 22/Chip Select 5	Output	–	A22	29
5	PB5	A23/CS4	Address 23/Chip Select 4	Output	–	A23	30
6	PB6	TCLK0	Timer0 Clock Signal	Input	0	PIO Input	53
7	PB7	TIOA0	Timer0 Signal A	Bi-directional	0	PIO Input	54
8	PB8	TIOB0	Timer0 Signal B	Bi-directional	0	PIO Input	55
9	PB9	TCLK1	Timer1 Clock Signal	Input	0	PIO Input	56
10	PB10	TIOA1	Timer1 Signal A	Bi-directional	0	PIO Input	57
11	PB11	TIOB1	Timer1 Signal B	Bi-directional	0	PIO Input	58
12	PB12	TCLK2	Timer2 Clock Signal	Input	0	PIO Input	59
13	PB13	TIOA2	Timer2 Signal A	Bi-directional	0	PIO Input	62
14	PB14	TIOB2	Timer2 Signal B	Bi-directional	0	PIO Input	63
15	PB15	TCLK3	Timer3 Clock Signal	Input	0	PIO Input	64
16	PB16	TIOA3	Timer3 Signal A	Bi-directional	0	PIO Input	65
17	PB17	TIOB3	Timer3 Signal B	Bi-directional	0	PIO Input	66
18	PB18	TCLK4	Timer4 Clock Signal	Input	0	PIO Input	67
19	PB19	TIOA4	Timer4 Signal A	Bi-directional	0	PIO Input	68
20	PB20	TIOB4	Timer4 Signal B	Bi-directional	0	PIO Input	69
21	PB21	TCLK5	Timer5 Clock Signal	Input	0	PIO Input	70
22	PB22	TIOA5	Timer5 Signal A	Bi-directional	0	PIO Input	75
23	PB23	TIOB5	Timer5 Signal B	Bi-directional	0	PIO Input	76

Note: 1. The OFF value is the default level seen on the peripheral input when the PIO line is enabled.

PIO User Interface

PIO Controller A Base Address: 0xFFFEC000 (Code Label `PIOA_BASE`)
PIO Controller B Base Address: 0xFFFF0000 (Code Label `PIOB_BASE`)

Table 15-3. PIO Controller Memory Map

Offset	Register	Name	Access	Reset State
0x00	PIO Enable Register	PIO_PER	Write-only	–
0x04	PIO Disable Register	PIO_PDR	Write-only	–
0x08	PIO Status Register	PIO_PSR	Read-only	0x3DFFFFFF (A) 0x00FFFFC0 (B)
0x0C	Reserved	–	–	–
0x10	Output Enable Register	PIO_OER	Write-only	–
0x14	Output Disable Register	PIO_ODR	Write-only	–
0x18	Output Status Register	PIO_OSR	Read-only	0
0x1C	Reserved	–	–	–
0x20	Input Filter Enable Register	PIO_IFER	Write-only	–
0x24	Input Filter Disable Register	PIO_IFDR	Write-only	–
0x28	Input Filter Status Register	PIO_IFSR	Read-only	0
0x2C	Reserved	–	–	–
0x30	Set Output Data Register	PIO_SODR	Write-only	–
0x34	Clear Output Data Register	PIO_CODR	Write-only	–
0x38	Output Data Status Register	PIO_ODSR	Read-only	0
0x3C	Pin Data Status Register	PIO_PDSR	Read-only	(see [1])
0x40	Interrupt Enable Register	PIO_IER	Write-only	–
0x44	Interrupt Disable Register	PIO_IDR	Write-only	–
0x48	Interrupt Mask Register	PIO_IMR	Read-only	0
0x4C	Interrupt Status Register	PIO_ISR	Read-only	(see [2])
0x50	Multi-driver Enable Register	PIO_MDER	Write-only	–
0x54	Multi-driver Disable Register	PIO_MDDR	Write-only	–
0x58	Multi-driver Status Register	PIO_MDSR	Read-only	0
0x5C	Reserved	–	–	–

Notes: 1. The reset value of this register depends on the level of the external pins at reset.
2. This register is cleared at reset. However, the first read of the register can give a value not equal to zero if any changes have occurred on any pins between the reset and the read.

15.9 PIO Enable Register

Register Name: PIO_PER
Access Type: Write-only
Offset: 0x00

31	30	29	28	27	26	25	24
P31	P30	P29	P28	P27	P26	P25	P24
23	22	21	20	19	18	17	16
P23	P22	P21	P20	P19	P18	P17	P16
15	14	13	12	11	10	9	8
P15	P14	P13	P12	P11	P10	P9	P8
7	6	5	4	3	2	1	0
P7	P6	P5	P4	P3	P2	P1	P0

This register is used to enable individual pins to be controlled by the PIO Controller instead of the associated peripheral. When the PIO is enabled, the associated peripheral (if any) is held at logic zero.

0 = No effect.

1 = Enables the PIO to control the corresponding pin (disables peripheral control of the pin).

15.10 PIO Disable Register

Register Name: PIO_PDR
Access Type: Write-only
Offset: 0x04

31	30	29	28	27	26	25	24
P31	P30	P29	P28	P27	P26	P25	P24
23	22	21	20	19	18	17	16
P23	P22	P21	P20	P19	P18	P17	P16
15	14	13	12	11	10	9	8
P15	P14	P13	P12	P11	P10	P9	P8
7	6	5	4	3	2	1	0
P7	P6	P5	P4	P3	P2	P1	P0

This register is used to disable PIO control of individual pins. When the PIO control is disabled, the normal peripheral function is enabled on the corresponding pin.

0 = No effect.

1 = Disables PIO control (enables peripheral control) on the corresponding pin.

15.11 PIO Status Register

Register Name: PIO_PSR
Access Type: Read-only
Offset: 0x08
Reset Value: 0x3DFFFFFF (A)
0x00FFFFC0 (B)

31	30	29	28	27	26	25	24
P31	P30	P29	P28	P27	P26	P25	P24
23	22	21	20	19	18	17	16
P23	P22	P21	P20	P19	P18	P17	P16
15	14	13	12	11	10	9	8
P15	P14	P13	P12	P11	P10	P9	P8
7	6	5	4	3	2	1	0
P7	P6	P5	P4	P3	P2	P1	P0

This register indicates which pins are enabled for PIO control. This register is updated when PIO lines are enabled or disabled.

0 = PIO is inactive on the corresponding line (peripheral is active).

1 = PIO is active on the corresponding line (peripheral is inactive).

15.12 PIO Output Enable Register

Register Name: PIO_OER
Access Type: Write-only
Offset: 0x10

31	30	29	28	27	26	25	24
P31	P30	P29	P28	P27	P26	P25	P24
23	22	21	20	19	18	17	16
P23	P22	P21	P20	P19	P18	P17	P16
15	14	13	12	11	10	9	8
P15	P14	P13	P12	P11	P10	P9	P8
7	6	5	4	3	2	1	0
P7	P6	P5	P4	P3	P2	P1	P0

This register is used to enable PIO output drivers. If the pin is driven by a peripheral, this has no effect on the pin, but the information is stored. The register is programmed as follows:

0 = No effect.

1 = Enables the PIO output on the corresponding pin.

15.13 PIO Output Disable Register

Register Name: PIO_ODR
Access Type: Write-only
Offset: 0x14

31	30	29	28	27	26	25	24
P31	P30	P29	P28	P27	P26	P25	P24
23	22	21	20	19	18	17	16
P23	P22	P21	P20	P19	P18	P17	P16
15	14	13	12	11	10	9	8
P15	P14	P13	P12	P11	P10	P9	P8
7	6	5	4	3	2	1	0
P7	P6	P5	P4	P3	P2	P1	P0

This register is used to disable PIO output drivers. If the pin is driven by the peripheral, this has no effect on the pin, but the information is stored. The register is programmed as follows:

0 = No effect.

1 = Disables the PIO output on the corresponding pin.

15.14 PIO Output Status Register

Register Name: PIO_OSR
Access Type: Read-only
Offset: 0x18
Reset Value: 0

31	30	29	28	27	26	25	24
P31	P30	P29	P28	P27	P26	P25	P24
23	22	21	20	19	18	17	16
P23	P22	P21	P20	P19	P18	P17	P16
15	14	13	12	11	10	9	8
P15	P14	P13	P12	P11	P10	P9	P8
7	6	5	4	3	2	1	0
P7	P6	P5	P4	P3	P2	P1	P0

This register shows the PIO pin control (output enable) status which is programmed in PIO_OER and PIO ODR. The defined value is effective only if the pin is controlled by the PIO. The register reads as follows:

0 = The corresponding PIO is input on this line.

1 = The corresponding PIO is output on this line.

15.15 PIO Input Filter Enable Register

Register Name: PIO_IFER
Access Type: Write-only
Offset: 0x20

31	30	29	28	27	26	25	24
P31	P30	P29	P28	P27	P26	P25	P24
23	22	21	20	19	18	17	16
P23	P22	P21	P20	P19	P18	P17	P16
15	14	13	12	11	10	9	8
P15	P14	P13	P12	P11	P10	P9	P8
7	6	5	4	3	2	1	0
P7	P6	P5	P4	P3	P2	P1	P0

This register is used to enable input glitch filters. It affects the pin whether or not the PIO is enabled. The register is programmed as follows:

0 = No effect.

1 = Enables the glitch filter on the corresponding pin.

15.16 PIO Input Filter Disable Register

Register Name: IO_IFDR
Access Type: Write-only
Offset: 0x24

31	30	29	28	27	26	25	24
P31	P30	P29	P28	P27	P26	P25	P24
23	22	21	20	19	18	17	16
P23	P22	P21	P20	P19	P18	P17	P16
15	14	13	12	11	10	9	8
P15	P14	P13	P12	P11	P10	P9	P8
7	6	5	4	3	2	1	0
P7	P6	P5	P4	P3	P2	P1	P0

This register is used to disable input glitch filters. It affects the pin whether or not the PIO is enabled. The register is programmed as follows:

0 = No effect.

1 = Disables the glitch filter on the corresponding pin.

15.17 PIO Input Filter Status Register

Register Name: PIO_IFSR
Access Type: Read-only
Offset: 0x28
Reset Value: 0

31	30	29	28	27	26	25	24
P31	P30	P29	P28	P27	P26	P25	P24
23	22	21	20	19	18	17	16
P23	P22	P21	P20	P19	P18	P17	P16
15	14	13	12	11	10	9	8
P15	P14	P13	P12	P11	P10	P9	P8
7	6	5	4	3	2	1	0
P7	P6	P5	P4	P3	P2	P1	P0

This register indicates which pins have glitch filters selected. It is updated when PIO outputs are enabled or disabled by writing to PIO_IFER or PIO_IFDR.

0 = Filter is not selected on the corresponding input.

1 = Filter is selected on the corresponding input (peripheral and PIO).

15.18 PIO Set Output Data Register

Register Name: PIO_SODR
Access Type: Write-only
Offset: 0x30

31	30	29	28	27	26	25	24
P31	P30	P29	P28	P27	P26	P25	P24
23	22	21	20	19	18	17	16
P23	P22	P21	P20	P19	P18	P17	P16
15	14	13	12	11	10	9	8
P15	P14	P13	P12	P11	P10	P9	P8
7	6	5	4	3	2	1	0
P7	P6	P5	P4	P3	P2	P1	P0

This register is used to set PIO output data. It affects the pin only if the corresponding PIO output line is enabled and if the pin is controlled by the PIO. Otherwise, the information is stored.

0 = No effect.

1 = PIO output data on the corresponding pin is set.

15.19 PIO Clear Output Data Register

Register Name: PIO_CODR
Access Type: Write-only
Offset: 0x34

31	30	29	28	27	26	25	24
P31	P30	P29	P28	P27	P26	P25	P24
23	22	21	20	19	18	17	16
P23	P22	P21	P20	P19	P18	P17	P16
15	14	13	12	11	10	9	8
P15	P14	P13	P12	P11	P10	P9	P8
7	6	5	4	3	2	1	0
P7	P6	P5	P4	P3	P2	P1	P0

This register is used to clear PIO output data. It affects the pin only if the corresponding PIO output line is enabled and if the pin is controlled by the PIO. Otherwise, the information is stored.

0 = No effect.

1 = PIO output data on the corresponding pin is cleared.

15.20 PIO Output Data Status Register

Register Name: PIO_ODSR
Access Type: Read-only
Offset: 0x38
Reset Value: 0

31	30	29	28	27	26	25	24
P31	P30	P29	P28	P27	P26	P25	P24
23	22	21	20	19	18	17	16
P23	P22	P21	P20	P19	P18	P17	P16
15	14	13	12	11	10	9	8
P15	P14	P13	P12	P11	P10	P9	P8
7	6	5	4	3	2	1	0
P7	P6	P5	P4	P3	P2	P1	P0

This register shows the output data status which is programmed in PIO_SODR or PIO_CODR. The defined value is effective only if the pin is controlled by the PIO Controller and only if the pin is defined as an output.

0 = The output data for the corresponding line is programmed to 0.

1 = The output data for the corresponding line is programmed to 1.

15.21 PIO Pin Data Status Register

Register Name: PIO_PDSR
Access Type: Read-only
Offset: 0x3C
Reset Value: Undefined

31	30	29	28	27	26	25	24
P31	P30	P29	P28	P27	P26	P25	P24
23	22	21	20	19	18	17	16
P23	P22	P21	P20	P19	P18	P17	P16
15	14	13	12	11	10	9	8
P15	P14	P13	P12	P11	P10	P9	P8
7	6	5	4	3	2	1	0
P7	P6	P5	P4	P3	P2	P1	P0

This register shows the state of the physical pin of the chip. The pin values are always valid, regardless of whether the pins are enabled as PIO, peripheral, input or output. The register reads as follows:

0 = The corresponding pin is at logic 0.

1 = The corresponding pin is at logic 1.

15.22 PIO Interrupt Enable Register

Register Name: PIO_IER
Access Type: Write-only
Offset: 0x40

31	30	29	28	27	26	25	24
P31	P30	P29	P28	P27	P26	P25	P24
23	22	21	20	19	18	17	16
P23	P22	P21	P20	P19	P18	P17	P16
15	14	13	12	11	10	9	8
P15	P14	P13	P12	P11	P10	P9	P8
7	6	5	4	3	2	1	0
P7	P6	P5	P4	P3	P2	P1	P0

This register is used to enable PIO interrupts on the corresponding pin. It has effect whether PIO is enabled or not.

0 = No effect.

1 = Enables an interrupt when a change of logic level is detected on the corresponding pin.

15.23 PIO Interrupt Disable Register

Register Name: PIO_IDR
Access Type: Write-only
Offset: 0x44

31	30	29	28	27	26	25	24
P31	P30	P29	P28	P27	P26	P25	P24
23	22	21	20	19	18	17	16
P23	P22	P21	P20	P19	P18	P17	P16
15	14	13	12	11	10	9	8
P15	P14	P13	P12	P11	P10	P9	P8
7	6	5	4	3	2	1	0
P7	P6	P5	P4	P3	P2	P1	P0

This register is used to disable PIO interrupts on the corresponding pin. It has effect whether the PIO is enabled or not.

0 = No effect.

1 = Disables the interrupt on the corresponding pin. Logic level changes are still detected.

15.24 PIO Interrupt Mask Register

Register Name: PIO_IMR
Access Type: Read-only
Offset: 0x48
Reset Value: 0

31	30	29	28	27	26	25	24
P31	P30	P29	P28	P27	P26	P25	P24
23	22	21	20	19	18	17	16
P23	P22	P21	P20	P19	P18	P17	P16
15	14	13	12	11	10	9	8
P15	P14	P13	P12	P11	P10	P9	P8
7	6	5	4	3	2	1	0
P7	P6	P5	P4	P3	P2	P1	P0

This register shows which pins have interrupts enabled. It is updated when interrupts are enabled or disabled by writing to PIO_IER or PIO_IDR.

0 = Interrupt is not enabled on the corresponding input pin.

1 = Interrupt is enabled on the corresponding input pin.

15.25 PIO Interrupt Status Register

Register Name: PIO_ISR
Access Type: Read-only
Offset: 0x4C

31	30	29	28	27	26	25	24
P31	P30	P29	P28	P27	P26	P25	P24
23	22	21	20	19	18	17	16
P23	P22	P21	P20	P19	P18	P17	P16
15	14	13	12	11	10	9	8
P15	P14	P13	P12	P11	P10	P9	P8
7	6	5	4	3	2	1	0
P7	P6	P5	P4	P3	P2	P1	P0

This register indicates for each pin when a logic value change has been detected (rising or falling edge). This is valid whether the PIO is selected for the pin or not and whether the pin is an input or an output.

The register is reset to zero following a read, and at reset.

0 = No input change has been detected on the corresponding pin since the register was last read.

1 = At least one input change has been detected on the corresponding pin since the register was last read.

15.26 PIO Multi-drive Enable Register

Register Name: PIO_MDER
Access Type: Write-only
Offset: 0x50

31	30	29	28	27	26	25	24
P31	P30	P29	P28	P27	P26	P25	P24
23	22	21	20	19	18	17	16
P23	P22	P21	P20	P19	P18	P17	P16
15	14	13	12	11	10	9	8
P15	P14	P13	P12	P11	P10	P9	P8
7	6	5	4	3	2	1	0
P7	P6	P5	P4	P3	P2	P1	P0

This register is used to enable PIO output drivers to be configured as open drain to support external drivers on the same pin.

0 = No effect.

1 = Enables multi-drive option on the corresponding pin.

15.27 PIO Multi-drive Disable Register

Register Name: PIO_MDDR
Access Type: Write-only
Offset: 0x54

31	30	29	28	27	26	25	24
P31	P30	P29	P28	P27	P26	P25	P24
23	22	21	20	19	18	17	16
P23	P22	P21	P20	P19	P18	P17	P16
15	14	13	12	11	10	9	8
P15	P14	P13	P12	P11	P10	P9	P8
7	6	5	4	3	2	1	0
P7	P6	P5	P4	P3	P2	P1	P0

This register is used to disable the open drain configuration of the output buffer.

0 = No effect.

1 = Disables the multi-driver option on the corresponding pin.

15.28 PIO Multi-drive Status Register

Register Name: PIO_MDSR
Access Type: Read-only
Offset: 0x58
Reset Value: 0

31	30	29	28	27	26	25	24
P31	P30	P29	P28	P27	P26	P25	P24
23	22	21	20	19	18	17	16
P23	P22	P21	P20	P19	P18	P17	P16
15	14	13	12	11	10	9	8
P15	P14	P13	P12	P11	P10	P9	P8
7	6	5	4	3	2	1	0
P7	P6	P5	P4	P3	P2	P1	P0

This register indicates which pins are configured with open drain drivers.

0 = PIO is not configured as an open drain.

1 = PIO is configured as an open drain.

16. SF: Special Function Registers

The AT91M42800A provides registers that implement the following special functions:

- Chip Identification
- RESET Status
- Protect Mode (see Section 14.9 ”Protect Mode” on page 85)

16.1 Chip Identification

The AT91M42800A chip identifier is 0x14280041.

SF User Interface

Chip ID Base Address: 0xFFF00000 (Code Label `SF_BASE`)

Table 16-1. SF Memory Map

Offset	Register	Name	Access	Reset State
0x00	Chip ID Register	SF_CIDR	Read-only	Hardwired
0x04	Chip ID Extension Register	SF_EXID	Read-only	Hardwired
0x08	Reset Status Register	SF_RSR	Read-only	See register description
0x0C	Reserved	–	–	–
0x10	Reserved	–	–	–
0x14	Reserved	–	–	–
0x18	Protect Mode Register	SF_PMR	Read/Write	0x0

16.2 Chip ID Register

Register Name: SF_CIDR
Access Type: Read-only
Offset: 0x00

31	30	29	28	27	26	25	24
EXT	NVPTYP			ARCH			
23	22	21	20	19	18	17	16
ARCH				VDSIZ			
15	14	13	12	11	10	9	8
NVDSIZ				NVPSIZ			
7	6	5	4	3	2	1	0
0	1	0	VERSION				

- **VERSION: Version of the Chip (Code Label `SF_VERSION`)**

This value is incremented by one with each new version of the chip (from zero to a maximum value of 31).

- **NVPSIZ: Nonvolatile Program Memory Size**

NVPSIZ				Size	Code Label: `SF_NVPSIZ`
0	0	0	0	None	SF_NVPSIZ_NONE
0	0	1	1	32K Bytes	SF_NVPSIZ_32K
0	1	0	1	64K Bytes	SF_NVP_SIZ_64K
0	1	1	1	128K Bytes	SF_NVP_SIZ_128K
1	0	0	1	256K Bytes	SF_NVP_SIZ_256K
Others				Reserved	–

- **NVDSIZ: Nonvolatile Data Memory Size**

NVDSIZ				Size	Code Label: `SF_NVDSIZ`
0	0	0	0	None	SF_NVDSIZ_NONE
Others				Reserved	–

- **VDSIZ: Volatile Data Memory Size**

VDSIZ				Size	Code Label: `SF_VDSIZ`
0	0	0	0	None	SF_VDSIZ_NONE
0	0	0	1	1K Byte	SF_VDSIZ_1K
0	0	1	0	2K Bytes	SF_VDSIZ_2K
0	1	0	0	4K Bytes	SF_VDSIZ_4K
1	0	0	0	8K Bytes	SF_VDSIZ_8K
Others				Reserved	–

- **ARCH: Chip Architecture**

Code of Architecture: Two BCD digits

ARCH	Selected ARCH	Code Label: SF_ARCH
0110 0011	AT91x63yyy	SF_ARCH_AT91x63
0100 0000	AT91x40yyy	SF_ARCH_AT91x40
0101 0101	AT91x55yyy	SF_ARCH_AT91x55

- **NVPTYP: Nonvolatile Program Memory Type**

NVPTYP			Type	Code Label: SF_NVPTYP
0	0	1	“M” Series or “F” Series	SF_NVPTYP_M
1	0	0	“R” Series	SF_NVPTYP_R

- **EXT: Extension Flag (Code Label SF_EXT)**

0 = Chip ID has a single register definition without extensions.
1 = An extended Chip ID exists (to be defined in the future).

16.3 Chip ID Extension Register

Register Name: SF_EXID
Access Type: Read-only
Offset: 0x04

This register is reserved for future use. It will be defined when needed.

16.4 Reset Status Register

Register Name: SF_RSR
Access Type: Read-only
Offset: 0x08

31	30	29	28	27	26	25	24
–	–	–	–	–	–	–	–
23	22	21	20	19	18	17	16
–	–	–	–	–	–	–	–
15	14	13	12	11	10	9	8
–	–	–	–	–	–	–	–
7	6	5	4	3	2	1	0
RESET							

- **RESET: Reset Status Information**

This field indicates whether the reset was demanded by the external system (via NRST) or by the Watchdog internal reset request.

Reset	Cause of Reset	Code Label
0x6C	External Pin	SF_EXT_RESET
0x53	Internal Watchdog	SF_WD_RESET

16.5 SF Protect Mode Register

Register Name: SF_PMR
Offset: 0x18
Reset Value: 0x00000000

31	30	29	28	27	26	25	24
PMRKEY							
23	22	21	20	19	18	17	16
PMRKEY							
15	14	13	12	11	10	9	8
–	–	–	–	–	–	–	–
7	6	5	4	3	2	1	0
–	–	AIC	–	–	–	–	–

- **AIC: AIC Protect Mode Enable (Code Label `SF_AIC`)**

0 = The Advanced Interrupt Controller runs in Normal Mode.

1 = The Advanced Interrupt Controller runs in Protect Mode.

See Section 14.9 ”Protect Mode” on page 85.

- **PMRKEY: Protect Mode Register Key**

Used only when writing SF_PMR. PMRKEY reads 0.

0x27A8: Write access in SF_PMR is allowed.

Other value: Write access in SF_PMR is prohibited.

17. USART: Universal Synchronous/Asynchronous Receiver/Transmitter

The AT91M42800A provides two identical, full-duplex, universal synchronous/asynchronous receiver/transmitters that interface to the APB and are connected to the Peripheral Data Controller.

The main features are:

- Programmable Baud Rate Generator with External or Internal Clock, as well as Slow Clock
- Parity, Framing and Overrun Error Detection
- Line Break Generation and Detection
- Automatic Echo, Local Loopback and Remote Loopback channel modes
- Multi-drop Mode: Address Detection and Generation
- Interrupt Generation
- Two Dedicated Peripheral Data Controller channels
- 5-, 6-, 7-, 8- and 9-bit character length

Figure 17-1. USART Block Diagram

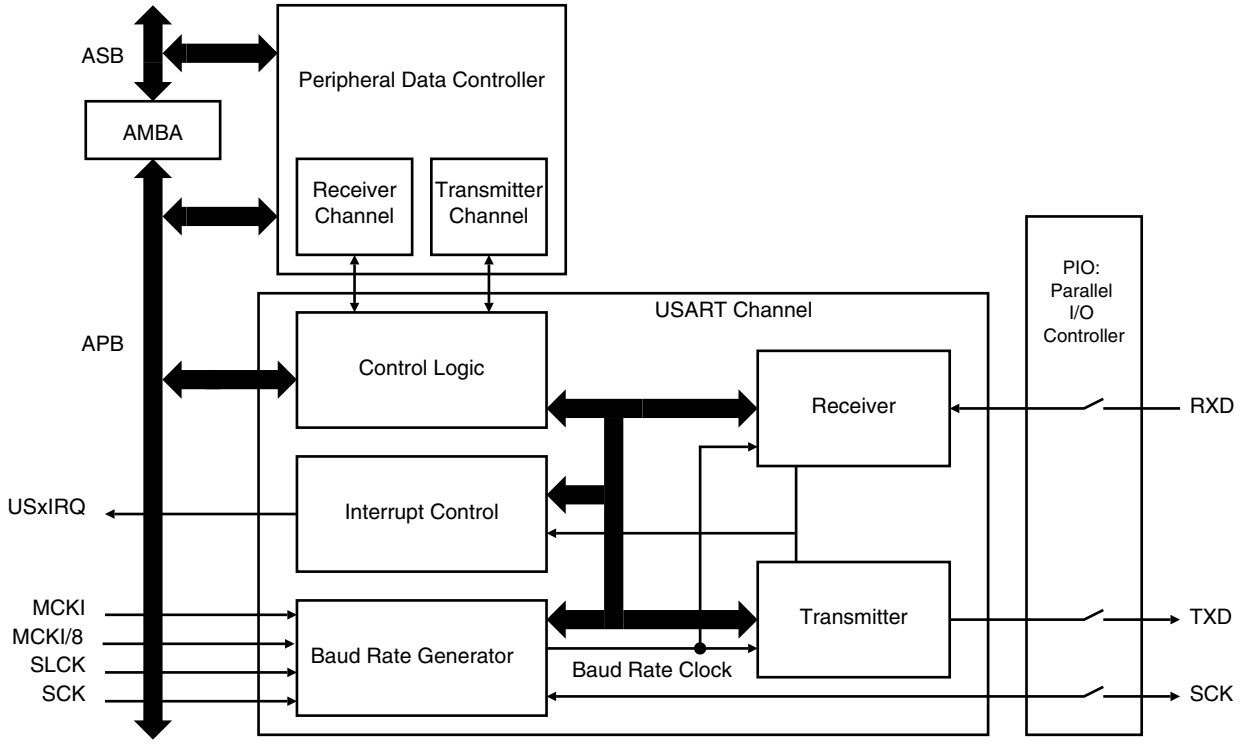

17.1 Pin Description

Each USART channel has the following external signals:

Name	Description
SCK	USART Serial clock can be configured as input or output: SCK is configured as input if an External clock is selected (USCLKS = 3) SCK is driven as output if the External Clock is disabled (USCLKS ≠ 3) and Clock output is enabled (CLKO = 1)
TXD	Transmit Serial Data is an output
RXD	Receive Serial Data is an input

Notes:
1. After a hardware reset, the USART clock is disabled by default (see "PMC: Power Management Controller" on page 55). The user must configure the Power Management Controller before any access to the User Interface of the USART.
2. After a hardware reset, the USART pins are deselected by default (see "PIO: Parallel I/O Controller" on page 97). The user must configure the PIO Controller before enabling the transmitter or receiver. If the user selects one of the internal clocks, SCK can be configured as a PIO.

17.2 Baud Rate Generator

The Baud Rate Generator provides the bit period clock (the Baud Rate clock) to both the Receiver and the Transmitter.

The Baud Rate Generator can select between external and internal clock sources. The external clock source is SCK. The internal clock sources can be either the master clock MCK or the master clock divided by 8 (MCK/8).

Note: In all cases, if an external clock is used, the duration of each of its levels must be longer than the system clock (MCK) period. The external clock frequency must be at least 2.5 times lower than the system clock.

When the USART is programmed to operate in Asynchronous Mode (SYNC = 0 in the Mode Register US_MR), the selected clock is divided by 16 times the value (CD) written in US_BRGR (Baud Rate Generator Register). If US_BRGR is set to 0, the Baud Rate Clock is disabled.

$$\text{Baud Rate} = \frac{\text{Selected Clock}}{16 \times \text{CD}}$$

When the USART is programmed to operate in Synchronous Mode (SYNC = 1) and the selected clock is internal (USCLKS ≠ 3 in the Mode Register US_MR), the Baud Rate Clock is the internal selected clock divided by the value written in US_BRGR. If US_BRGR is set to 0, the Baud Rate Clock is disabled.

$$\text{Baud Rate} = \frac{\text{Selected Clock}}{\text{CD}}$$

In Synchronous Mode with external clock selected (USCLKS = 3), the clock is provided directly by the signal on the SCK pin. No division is active. The value written in US_BRGR has no effect.

Figure 17-2. Baud Rate Generator

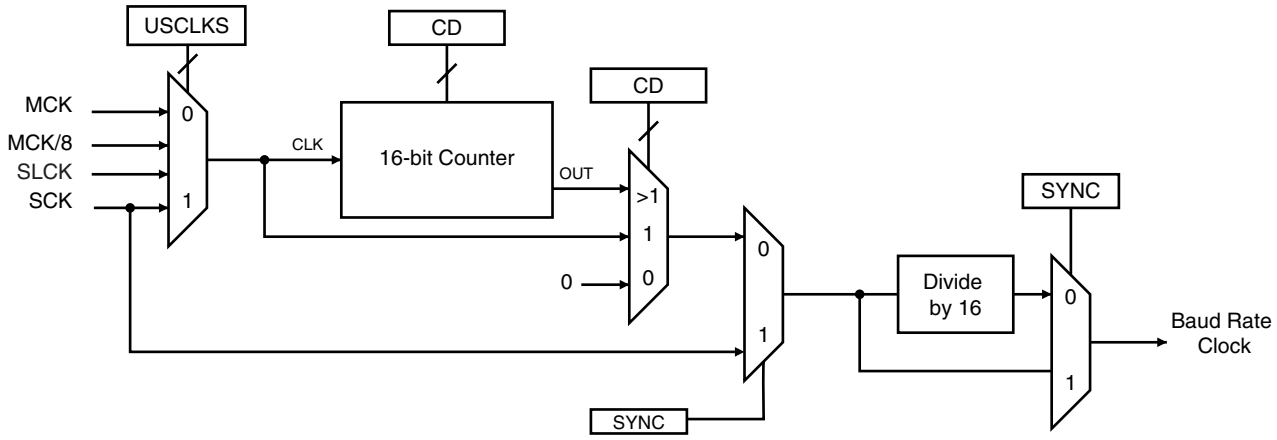

17.3 Receiver

17.3.1 Asynchronous Receiver

The USART is configured for asynchronous operation when SYNC = 0 (bit 7 of US_MR). In asynchronous mode, the USART detects the start of a received character by sampling the RXD signal until it detects a valid start bit. A low level (space) on RXD is interpreted as a valid start bit if it is detected for more than 7 cycles of the sampling clock, which is 16 times the baud rate. Hence a space which is longer than 7/16 of the bit period is detected as a valid start bit. A space which is 7/16 of a bit period or shorter is ignored and the receiver continues to wait for a valid start bit.

When a valid start bit has been detected, the receiver samples the RXD at the theoretical mid-point of each bit. It is assumed that each bit lasts 16 cycles of the sampling clock (one bit period) so the sampling point is 8 cycles (0.5 bit periods) after the start of the bit. The first sampling point is therefore 24 cycles (1.5 bit periods) after the falling edge of the start bit was detected. Each subsequent bit is sampled 16 cycles (1 bit period) after the previous one.

Figure 17-3. Asynchronous Mode: Start Bit Detection

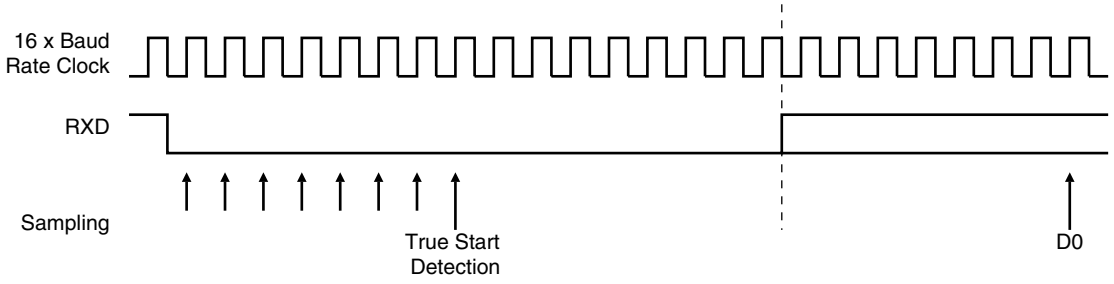

Figure 17-4. Asynchronous Mode: Character Reception

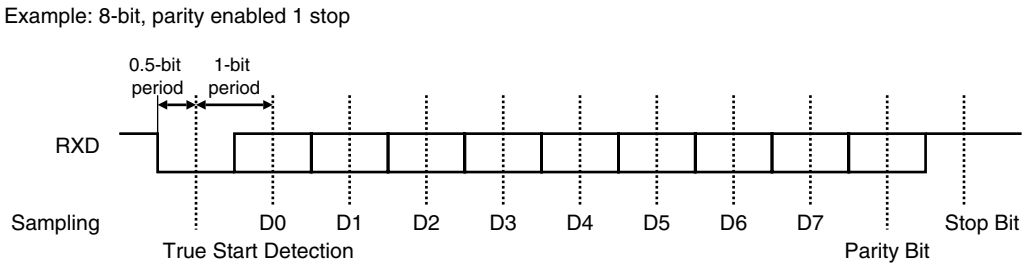

17.3.2 Synchronous Receiver

When configured for synchronous operation (SYNC = 1), the receiver samples the RXD signal on each rising edge of the Baud Rate clock. If a low level is detected, it is considered as a start. Data bits, parity bit and stop bit are sampled and the receiver waits for the next start bit. See example in Figure 17-5.

Figure 17-5. Synchronous Mode: Character Reception

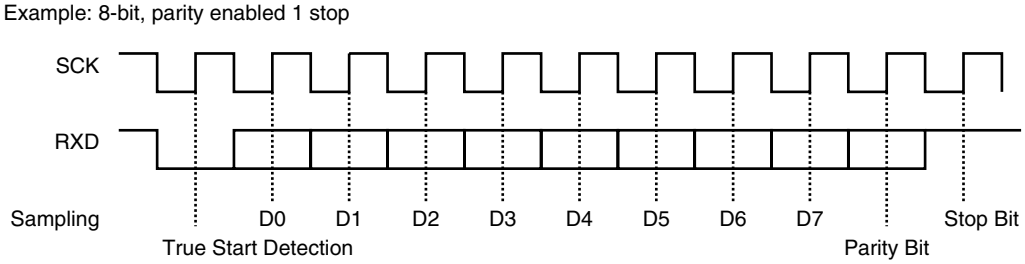

17.3.3 Receiver Ready

When a complete character is received, it is transferred to the US_RHR and the RXRDY status bit in US_CSR is set. If US_RHR has not been read since the last transfer, the OVRE status bit in US_CSR is set.

17.3.4 Parity Error

Each time a character is received, the receiver calculates the parity of the received data bits, in accordance with the field PAR in US_MR. It then compares the result with the received parity bit. If different, the parity error bit PARE in US_CSR is set.

17.3.5 Framing Error

If a character is received with a stop bit at low level and with at least one data bit at high level, a framing error is generated. This sets FRAME in US_CSR.

17.3.6 Time-out

This function allows an idle condition on the RXD line to be detected. The maximum delay for which the USART should wait for a new character to arrive while the RXD line is inactive (high level) is programmed in US_RTOR (Receiver Tim-out). When this register is set to 0, no time-out is detected. Otherwise, the receiver waits for a first character and then initializes a counter which is decremented at each bit period and reloaded at each byte reception. When the counter reaches 0, the TIMEOUT bit in US_CSR is set. The user can restart the wait for a first character with the STTTO (Start Time-out) bit in US_CR.

Calculation of time-out duration:

Duration = Value x 4 x Bit Period

17.4 Transmitter

The transmitter has the same behavior in both synchronous and asynchronous operating modes. Start bit, data bits, parity bit and stop bits are serially shifted, lowest significant bit first, on the falling edge of the serial clock. See example in Figure 17-6.

The number of data bits is selected in the CHRL field in US_MR.

The parity bit is set according to the PAR field in US_MR.

The number of stop bits is selected in the NBSTOP field in US_MR.

When a character is written to US_THR (Transmit Holding), it is transferred to the Shift Register as soon as it is empty. When the transfer occurs, the TXRDY bit in US_CSR is set until a new character is written to US_THR. If Transmit Shift Register and US_THR are both empty, the TXEMPTY bit in US_CSR is set.

17.4.1 Time-guard

The Time-guard function allows the transmitter to insert an idle state on the TXD line between two characters. The duration of the idle state is programmed in US_TTGR (Transmitter Time-guard). When this register is set to zero, no time-guard is generated. Otherwise, the transmitter holds a high level on TXD after each transmitted byte during the number of bit periods programmed in US_TTGR.

$$\text{Idle state duration between two characters} = \text{Time-guard Value} \times \text{Bit Period}$$

Figure 17-6. Synchronous and Asynchronous Modes: Character Transmission

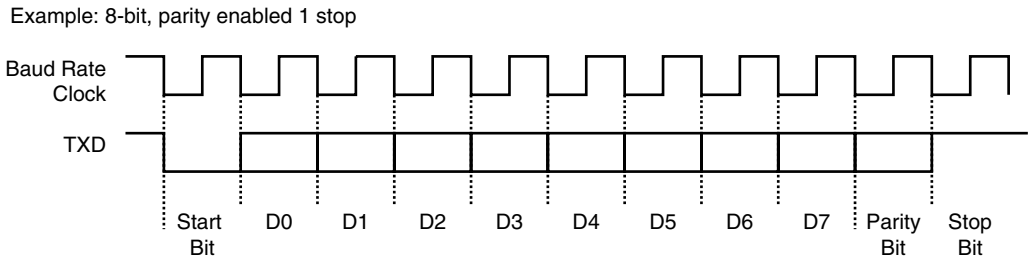

17.5 Multi-drop Mode

When the field PAR in US_MR equals 11X (binary value), the USART is configured to run in Multi-drop mode. In this case, the parity error bit PARE in US_CSR is set when data is detected with a parity bit set to identify an address byte. PARE is cleared with the Reset Status Bits Command (RSTSTA) in US_CR. If the parity bit is detected low, identifying a data byte, PARE is not set.

The transmitter sends an address byte (parity bit set) when a Send Address Command (SENDA) is written to US_CR. In this case, the next byte written to US_THR will be transmitted as an address. After this any byte transmitted will have the parity bit cleared.

17.6 Break

A break condition is a low signal level that has a duration of at least one character (including start/stop bits and parity).

17.6.1 Transmit Break

The transmitter generates a break condition on the TXD line when STTBRK is set in US_CR (Control Register). In this case, the character present in the Transmit Shift Register is completed before the line is held low.

To cancel a break condition on the TXD line, the STPBRK command in US_CR must be set. The USART completes a minimum break duration of one character length. The TXD line then returns to high level (idle state) for at least 12 bit periods, or the value of the Time-guard register if it is greater than 12, to ensure that the end of break is correctly detected. Then the transmitter resumes normal operation.

The BREAK is managed like a character:

- The STTBRK and the STPBRK commands are performed only if the transmitter is ready (bit TXRDY = 1 in US_CSR)
- The STTBRK command blocks the transmitter holding register (bit TXRDY is cleared in US_CSR) until the break has started
- A break is started when the Shift Register is empty (any previous character is fully transmitted). US_CSR.TXEMPTY is cleared. The break blocks the transmitter shift register until it is completed (high level for at least 12 bit periods after the STPBRK command is requested)

In order to avoid unpredictable states:

- STTBRK and STPBRK commands must not be requested at the same time
- Once an STTBRK command is requested, further STTBRK commands are ignored until the BREAK is ended (high level for at least 12 bit periods)
- All STPBRK commands requested without a previous STTBRK command are ignored
- A byte written into the Transmit Holding Register while a break is pending but not started (bit TXRDY = 0 in US_CSR) is ignored
- It is *not permitted* to write new data in the Transmit Holding Register while a break is in progress (STPBRK has not been requested), even though TXRDY = 1 in US_CSR.
- A new STTBRK command *must not* be issued until an existing break has ended (TXEMPTY=1 in US_CSR).

The standard break transmission sequence is:

1. Wait for the transmitter ready (US_CSR.TXRDY = 1)
2. Send the STTBRK command (write 0x0200 to US_CR)
3. Wait for the transmitter ready (bit TXRDY = 1 in US_CSR)
4. Send the STPBRK command (write 0x0400 to US_CR)

The next byte can then be sent:

5. Wait for the transmitter ready
   (bit TXRDY = 1 in US_CSR)
6. Send the next byte
   (write byte to US_THR)

Each of these steps can be scheduled by using the interrupt if the bit TXRDY in US_IMR is set.

For character transmission, the USART channel must be enabled before sending a break.

17.6.2 Receive Break

The receiver detects a break condition when all data, parity and stop bits are low. When the low stop bit is detected, the receiver asserts the RXBRK bit in US_CSR. An end of receive break is detected by a high level for at least 2/16 of a bit period in asynchronous operating mode or at least one sample in synchronous operating mode. RXBRK is also asserted when an end of break is detected.

Both the beginning and the end of a break can be detected by interrupt if the bit US_IMR.RXBRK is set.

17.7 Peripheral Data Controller

Each USART channel is closely connected to a corresponding Peripheral Data Controller channel. One is dedicated to the receiver. The other is dedicated to the transmitter.

The PDC is disabled if 9-bit character length is selected (MODE9 = 1) in US_MR.

The PDC channel is programmed using US_TPR (Transmit Pointer) and US_TCR (Transmit Counter) for the transmitter and US_RPR (Receive Pointer) and US_RCR (Receive Counter) for the receiver. The status of the PDC is given in US_CSR by the ENDTX bit for the transmitter and by the ENDRX bit for the receiver.

The pointer registers (US_TPR and US_RPR) are used to store the address of the transmit or receive buffers. The counter registers (US_TCR and US_RCR) are used to store the size of these buffers.

The receiver data transfer is triggered by the RXRDY bit and the transmitter data transfer is triggered by TXRDY. When a transfer is performed, the counter is decremented and the pointer is incremented. When the counter reaches 0, the status bit is set (ENDRX for the receiver, ENDTX for the transmitter in US_CSR) and can be programmed to generate an interrupt. Transfers are then disabled until a new non-zero counter value is programmed.

17.8 Interrupt Generation

Each status bit in US_CSR has a corresponding bit in US_IER (Interrupt Enable) and US_IDR (Interrupt Disable) which controls the generation of interrupts by asserting the USART interrupt line connected to the Advanced Interrupt Controller. US_IMR (Interrupt Mask Register) indicates the status of the corresponding bits.

When a bit is set in US_CSR and the same bit is set in US_IMR, the interrupt line is asserted.

17.9 Channel Modes

The USART can be programmed to operate in three different test modes, using the field CHMODE in US_MR.

Automatic echo mode allows bit by bit re-transmission. When a bit is received on the RXD line, it is sent to the TXD line. Programming the transmitter has no effect.

Local loopback mode allows the transmitted characters to be received. TXD and RXD pins are not used and the output of the transmitter is internally connected to the input of the receiver. The RXD pin level has no effect and the TXD pin is held high, as in idle state.

Remote loopback mode directly connects the RXD pin to the TXD pin. The Transmitter and the Receiver are disabled and have no effect. This mode allows bit-by-bit re-transmission.

Figure 17-7. Channel Modes

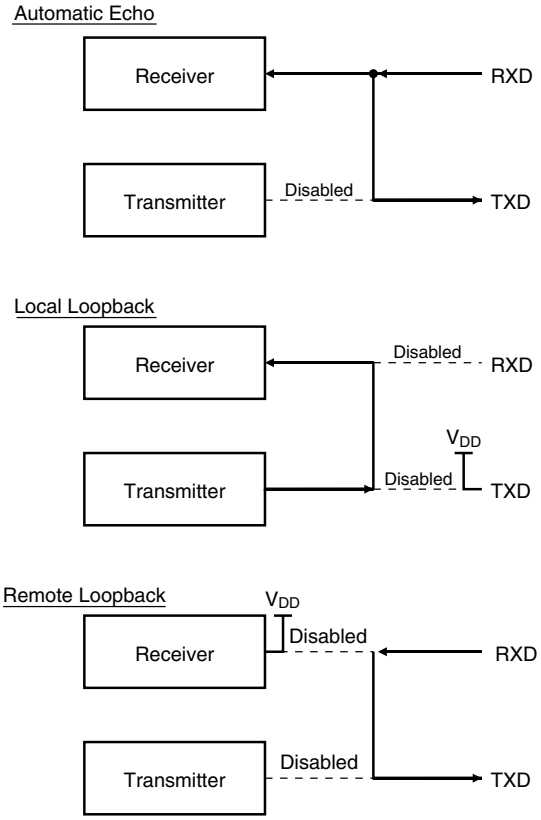

17.10 USART User Interface

Base Address USART0: 0xFFFC0000 (Code Label `USART0_BASE`)

Base Address USART1: 0xFFFC4000 (Code Label `USART1_BASE`)

Table 2. USART Memory Map

Offset	Register	Name	Access	Reset State
0x00	Control Register	US_CR	Write-only	–
0x04	Mode Register	US_MR	Read/Write	0
0x08	Interrupt Enable Register	US_IER	Write-only	–
0x0C	Interrupt Disable Register	US_IDR	Write-only	–
0x10	Interrupt Mask Register	US_IMR	Read-only	0
0x14	Channel Status Register	US_CSR	Read-only	0x18
0x18	Receiver Holding Register	US_RHR	Read-only	0
0x1C	Transmitter Holding Register	US_THR	Write-only	–
0x20	Baud Rate Generator Register	US_BRGR	Read/Write	0
0x24	Receiver Time-out Register	US_RTOR	Read/Write	0
0x28	Transmitter Time-guard Register	US_TTGR	Read/Write	0
0x2C	Reserved	–	–	–
0x30	Receive Pointer Register	US_RPR	Read/Write	0
0x34	Receive Counter Register	US_RCR	Read/Write	0
0x38	Transmit Pointer Register	US_TPR	Read/Write	0
0x3C	Transmit Counter Register	US_TCR	Read/Write	0

17.11 USART Control Register

Name: US_CR

Access Type: Write-only

Offset: 0x00

31	30	29	28	27	26	25	24
–	–	–	–	–	–	–	–
23	22	21	20	19	18	17	16
–	–	–	–	–	–	–	–
15	14	13	12	11	10	9	8
–	–	–	SENDA	STTTO	STPBRK	STTBRK	RSTSTA
7	6	5	4	3	2	1	0
TXDIS	TXEN	RXDIS	RXEN	RSTTX	RSTRX	–	–

- **RSTRX: Reset Receiver (Code Label `US_RSTRX`)**

0 = No effect.

1 = The receiver logic is reset.

- **RSTTX: Reset Transmitter (Code Label `US_RSTTX`)**

0 = No effect.

1 = The transmitter logic is reset.

- **RXEN: Receiver Enable (Code Label `US_RXEN`)**

0 = No effect.

1 = The receiver is enabled if RXDIS is 0.

- **RXDIS: Receiver Disable (Code Label `US_RXDIS`)**

0 = No effect.

1 = The receiver is disabled.

- **TXEN: Transmitter Enable (Code Label `US_TXEN`)**

0 = No effect.

1 = The transmitter is enabled if TXDIS is 0.

- **TXDIS: Transmitter Disable (Code Label `US_TXDIS`)**

0 = No effect.

1 = The transmitter is disabled.

- **RSTSTA: Reset Status Bits (Code Label `US_RSTSTA`)**

0 = No effect.

1 = Resets the status bits PARE, FRAME, OVRE and RXBRK in the US_CSR.

- **STTBRK: Start Break (Code Label `US_STTBRK`)**

0 = No effect.

1 = If break is not being transmitted, start transmission of a break after the characters present in US_THR and the Transmit Shift Register have been transmitted.

- **STPBRK: Stop Break (Code Label `US_STPBRK`)**

0 = No effect.

1 = If a break is being transmitted, stop transmission of the break after a minimum of one character length and transmit a high level during 12 bit periods.

- **STTTO: Start Time-out (Code Label `US_STTTO`)**

0 = No effect.

1 = Start waiting for a character before clocking the time-out counter.

- **SENDA: Send Address (Code Label `US_SENDA`)**

0 = No effect.

1 = In Multi-drop Mode only, the next character written to the US_THR is sent with the address bit set.

17.12 USART Mode Register

Name: US_MR

Access Type: Read/Write
Offset: 0x04
Reset Value: 0x0

31	30	29	28	27	26	25	24
–	–	–	–	–	–	–	–

23	22	21	20	19	18	17	16
–	–	–	–	–	CLKO	MODE9	–

15	14	13	12	11	10	9	8
CHMODE		NBSTOP		PAR			SYNC

7	6	5	4	3	2	1	0
CHRL		USCLKS		–	–	–	–

- **USCLKS: Clock Selection (Baud Rate Generator Input Clock)**

USCLKS		Selected Clock	Code Label: `US_CLKS`
0	0	MCK	`US_CLKS_MCK`
0	1	MCK/8	`US_CLKS_MCK8`
1	0	Slow Clock	`US_CLKS_SLCK`
1	1	External (SCK)	`US_CLKS_SCK`

- **CHRL: Character Length**

CHRL		Character Length	Code Label: `US_CHRL`
0	0	Five bits	`US_CHRL_5`
0	1	Six bits	`US_CHRL_6`
1	0	Seven bits	`US_CHRL_7`
1	1	Eight bits	`US_CHRL_8`

Start, stop and parity bits are added to the character length.

- **SYNC: Synchronous Mode Select (Code Label `US_SYNC`)**

0 = USART operates in Asynchronous Mode.

1 = USART operates in Synchronous Mode.

- **PAR: Parity Type**

PAR			Parity Type	Code Label: `US_PAR`
0	0	0	Even Parity	`US_PAR_EVEN`
0	0	1	Odd Parity	`US_PAR_ODD`
0	1	0	Parity forced to 0 (Space)	`US_PAR_SPACE`
0	1	1	Parity forced to 1 (Mark)	`US_PAR_MARK`
1	0	x	No parity	`US_PAR_NO`
1	1	x	Multi-drop mode	`US_PAR_MULTIDROP`

- **NBSTOP: Number of Stop Bits**

The interpretation of the number of stop bits depends on SYNC.

NBSTOP		Asynchronous (SYNC = 0)	Synchronous (SYNC = 1)	Code Label: US_NBSTOP
0	0	1 stop bit	1 stop bit	US_NBSTOP_1
0	1	1.5 stop bits	Reserved	US_NBSTOP_1_5
1	0	2 stop bits	2 stop bits	US_NBSTOP_2
1	1	Reserved	Reserved	–

Note: 1.5 or 2 stop bits are reserved for the TX function. The RX function uses only the 1 stop bit (there is no check on the 2 stop bit timeslot if NBSTO P= 10).

- **CHMODE: Channel Mode**

CHMODE		Mode Description	Code Label: US_CHMODE
0	0	Normal Mode The USART Channel operates as an Rx/Tx USART.	US_CHMODE_NORMAL
0	1	Automatic Echo Receiver Data Input is connected to TXD pin.	US_CHMODE_AUTOMATIC_ECHO
1	0	Local Loopback Transmitter Output Signal is connected to Receiver Input Signal.	US_CHMODE_LOCAL_LOOPBACK
1	1	Remote Loopback RXD pin is internally connected to TXD pin.	US_CHMODE_REMOTE_LOOPBACK

- **MODE9: 9-Bit Character Length (Code Label US_MODE9)**

0 = CHRL defines character length.

1 = 9-Bit character length.

- **CKLO: Clock Output Select (Code Label US_CLKO)**

0 = The USART does not drive the SCK pin.

1 = The USART drives the SCK pin.

17.13 USART Interrupt Enable Register

Name: US_IER

Access Type: Write-only

Offset: 0x08

31	30	29	28	27	26	25	24
COMMRX	COMMTX	–	–	–	–	–	–
23	22	21	20	19	18	17	16
–	–	–	–	–	–	–	–
15	14	13	12	11	10	9	8
–	–	–	–	–	–	TXEMPTY	TIMEOUT
7	6	5	4	3	2	1	0
PARE	FRAME	OVRE	ENDTX	ENDRX	RXBRK	TXRDY	RXRDY

- **RXRDY: Enable RXRDY Interrupt (Code Label `US_RXRDY`)**

0 = No effect.

1 = Enables RXRDY Interrupt.

- **TXRDY: Enable TXRDY Interrupt (Code Label `US_TXRDY`)**

0 = No effect.

1 = Enables TXRDY Interrupt.

- **RXBRK: Enable Receiver Break Interrupt (Code Label `US_RXBRK`)**

0 = No effect.

1 = Enables Receiver Break Interrupt.

- **ENDRX: Enable End of Receive Transfer Interrupt (Code Label `US_ENDRX`)**

0 = No effect.

1 = Enables End of Receive Transfer Interrupt.

- **ENDTX: Enable End of Transmit Transfer Interrupt (Code Label `US_ENDTX`)**

0 = No effect.

1 = Enables End of Transmit Transfer Interrupt.

- **OVRE: Enable Overrun Error Interrupt (Code Label `US_OVRE`)**

0 = No effect.

1 = Enables Overrun Error Interrupt.

- **FRAME: Enable Framing Error Interrupt (Code Label `US_FRAME`)**

0 = No effect.

1 = Enables Framing Error Interrupt.

- **PARE: Enable Parity Error Interrupt (Code Label `US_PARE`)**

0 = No effect.

1 = Enables Parity Error Interrupt.

- **TIMEOUT: Enable Time-out Interrupt (Code Label `US_TIMEOUT`)**

0 = No effect.

1 = Enables Reception Time-out Interrupt.

- **TXEMPTY: Enable TXEMPTY Interrupt (Code Label `US_TXEMPTY`)**

0 = No effect.

1 = Enables TXEMPTY Interrupt.

- **COMMTX: Enable ARM7TDMI ICE Debug Communication Channel Transmit Interrupt**

This bit is implemented for USART0 only.

0 = No effect.

1 = Enables COMMTX Interrupt

- **COMMRX: Enable ARM7TDMI ICE Debug Communication Channel Receive Interrupt**

This bit is implemented for USART0 only.

0 = No effect.

1 = Enables COMMRX Interrupt

17.14 USART Interrupt Disable Register

Name: US_IDR

Access Type: Write-only

Offset: 0x0C

31	30	29	28	27	26	25	24
COMMRX	COMMTX	–	–	–	–	–	–
23	22	21	20	19	18	17	16
–	–	–	–	–	–	–	–
15	14	13	12	11	10	9	8
–	–	–	–	–	–	TXEMPTY	TIMEOUT
7	6	5	4	3	2	1	0
PARE	FRAME	OVRE	ENDTX	ENDRX	RXBRK	TXRDY	RXRDY

- **RXRDY: Disable RXRDY Interrupt (Code Label `US_RXRDY`)**

0 = No effect.

1 = Disables RXRDY Interrupt.

- **TXRDY: Disable TXRDY Interrupt (Code Label `US_TXRDY`)**

0 = No effect.

1 = Disables TXRDY Interrupt.

- **RXBRK: Disable Receiver Break Interrupt (Code Label `US_RXBRK`)**

0 = No effect.

1 = Disables Receiver Break Interrupt.

- **ENDRX: Disable End of Receive Transfer Interrupt (Code Label `US_ENDRX`)**

0 = No effect.

1 = Disables End of Receive Transfer Interrupt.

- **ENDTX: Disable End of Transmit Transfer Interrupt (Code Label `US_ENDTX`)**

0 = No effect.

1 = Disables End of Transmit Transfer Interrupt.

- **OVRE: Disable Overrun Error Interrupt (Code Label `US_OVRE`)**

0 = No effect.

1 = Disables Overrun Error Interrupt.

- **FRAME: Disable Framing Error Interrupt (Code Label `US_FRAME`)**

0 = No effect.

1 = Disables Framing Error Interrupt.

- **PARE: Disable Parity Error Interrupt (Code Label `US_PARE`)**

0 = No effect.

1 = Disables Parity Error Interrupt.

- **TIMEOUT: Disable Time-out Interrupt (Code Label `US_TIMEOUT`)**

0 = No effect.

1 = Disables Receiver Time-out Interrupt.

- **TXEMPTY: Disable TXEMPTY Interrupt (Code Label `US_TXEMPTY`)**

0 = No effect.

1 = Disables TXEMPTY Interrupt.

- **COMMTX: Disable ARM7TDMI ICE Debug Communication Channel Transmit Interrupt**

This bit is implemented for USART0 only.

0 = No effect.

1 = Disables COMMTX Interrupt.

- **COMMRX: Disable ARM7TDMI ICE Debug Communication Channel Receive Interrupt**

This bit is implemented for USART0 only.

0 = No effect.

1 = Disables COMMRX Interrupt.

17.15 USART Interrupt Mask Register

Name: US_IMR

Access Type: Read-only

Offset: 0x10

Reset Value: 0x0

31	30	29	28	27	26	25	24
COMMRX	COMMTX	–	–	–	–	–	–
23	22	21	20	19	18	17	16
–	–	–	–	–	–	–	–
15	14	13	12	11	10	9	8
–	–	–	–	–	–	TXEMPTY	TIMEOUT
7	6	5	4	3	2	1	0
PARE	FRAME	OVRE	ENDTX	ENDRX	RXBRK	TXRDY	RXRDY

- **RXRDY: RXRDY Interrupt Mask (Code Label `US_RXRDY`)**

0 = RXRDY Interrupt is Disabled.

1 = RXRDY Interrupt is Enabled.

- **TXRDY: TXRDY Interrupt Mask (Code Label `US_TXRDY`)**

0 = TXRDY Interrupt is Disabled.

1 = TXRDY Interrupt is Enabled.

- **RXBRK: Receiver Break Interrupt Mask (Code Label `US_RXBRK`)**

0 = Receiver Break Interrupt is Disabled.

1 = Receiver Break Interrupt is Enabled.

- **ENDRX: End of Receive Transfer Interrupt Mask (Code Label `US_ENDRX`)**

0 = End of Receive Transfer Interrupt is Disabled.

1 = End of Receive Transfer Interrupt is Enabled.

- **ENDTX: End of Transmit Transfer Interrupt Mask (Code Label `US_ENDTX`)**

0 = End of Transmit Transfer Interrupt is Disabled.

1 = End of Transmit Transfer Interrupt is Enabled.

- **OVRE: Overrun Error Interrupt Mask (Code Label `US_OVRE`)**

0 = Overrun Error Interrupt is Disabled.

1 = Overrun Error Interrupt is Enabled.

- **FRAME: Framing Error Interrupt Mask (Code Label `US_FRAME`)**

0 = Framing Error Interrupt is Disabled.

1 = Framing Error Interrupt is Enabled.

- **PARE: Parity Error Interrupt Mask (Code Label `US_PARE`)**

0 = Parity Error Interrupt is Disabled.

1 = Parity Error Interrupt is Enabled.

- **TIMEOUT: Time-out Interrupt Mask (Code Label `US_TIMEOUT`)**

0 = Receive Time-out Interrupt is Disabled.

1 = Receive Time-out Interrupt is Enabled.

- **TXEMPTY: TXEMPTY Interrupt Mask (Code Label `US_TXEMPTY`)**

0 = TXEMPTY Interrupt is Disabled.

1 = TXEMPTY Interrupt is Enabled.

- **COMMTX: ARM7TDMI ICE Debug Communication Channel Transmit Interrupt Mask**

This bit is implemented for USART0 only.

0 = COMMTX Interrupt is Disabled

1 = COMMTX Interrupt is Enabled

- **COMMRX: ARM7TDMI ICE Debug Communication Channel Receive Interrupt Mask**

This bit is implemented for USART0 only.

0 = COMMRX Interrupt is Disabled

1 = COMMRX Interrupt is Enabled

17.16 USART Channel Status Register

Name: US_CSR

Access Type: Read-only

Offset: 0x14

Reset Value: 0x18

31	30	29	28	27	26	25	24
COMMRX	COMMTX	–	–	–	–	–	–
23	22	21	20	19	18	17	16
–	–	–	–	–	–	–	–
15	14	13	12	11	10	9	8
–	–	–	–	–	–	TXEMPTY	TIMEOUT
7	6	5	4	3	2	1	0
PARE	FRAME	OVRE	ENDTX	ENDRX	RXBRK	TXRDY	RXRDY

- **RXRDY: Receiver Ready (Code Label `US_RXRDY`)**

0 = No complete character has been received since the last read of the US_RHR or the receiver is disabled. If characters were being received when the receiver was disabled, RXRDY changes to 1 when the receiver is enabled.

1 = At least one complete character has been received and the US_RHR has not yet been read.

- **TXRDY: Transmitter Ready (Code Label `US_TXRDY`)**

0 = A character is in the US_THR waiting to be transferred to the Transmit Shift Register, or an STTBRK command has been requested, or the transmitter is disabled. As soon as the transmitter is enabled, TXRDY becomes 1.

1 = US_THR is empty and there is no Break request pending TSR availability.

Equal to zero when the USART is disabled or at reset. Transmitter Enable command (in US_CR) sets this bit to one.

- **RXBRK: Break Received/End of Break (Code Label `US_RXBRK`)**

0 = No Break Received nor End of Break detected since the last “Reset Status Bits” command in the Control Register.

1 = Break Received or End of Break detected since the last “Reset Status Bits” command in the Control Register.

- **ENDRX: End of Receive Transfer (Code Label `US_ENDRX`)**

0 = The End of Transfer signal from the Peripheral Data Controller channel dedicated to the receiver is inactive.

1 = The End of Transfer signal from the Peripheral Data Controller channel dedicated to the receiver is active.

- **ENDTX: End of Transmit Transfer (Code Label `US_ENDTX`)**

0 = The End of Transfer signal from the Peripheral Data Controller channel dedicated to the transmitter is inactive.

1 = The End of Transfer signal from the Peripheral Data Controller channel dedicated to the transmitter is active.

- **OVRE: Overrun Error (Code Label `US_OVRE`)**

0 = No byte has been transferred from the Receive Shift Register to the US_RHR when RxRDY was asserted since the last “Reset Status Bits” command.

1 = At least one byte has been transferred from the Receive Shift Register to the US_RHR when RxRDY was asserted since the last “Reset Status Bits” command.

- **FRAME: Framing Error (Code Label `US_FRAME`)**

0 = No stop bit has been detected low since the last “Reset Status Bits” command.

1 = At least one stop bit has been detected low since the last “Reset Status Bits” command.

- **PARE: Parity Error (Code Label `US_PARE`)**

1 = At least one parity bit has been detected false (or a parity bit high in multi-drop mode) since the last “Reset Status Bits” command.

0 = No parity bit has been detected false (or a parity bit high in multi-drop mode) since the last “Reset Status Bits” command.

- **TIMEOUT: Receiver Time-out (Code Label `US_TIMEOUT`)**

0 = There has not been a time-out since the last “Start Time-out” command or the Time-out Register is 0.

1 = There has been a time-out since the last “Start Time-out” command.

- **TXEMPTY: Transmitter Empty (Code Label `US_TXEMPTY`)**

0 = There are characters in either US_THR or the Transmit Shift Register, or the transmitter is disabled.

1 = There are no characters in either US_THR or the Transmit Shift Register. TXEMPTY is 1 after Parity, Stop Bit and Time-guard have been transmitted. TXEMPTY is 1 after stop bit has been sent, or after Time-guard has been sent if US_TTGR is not 0.

Equal to zero when the USART is disabled or at reset. Transmitter Enable command (in US_CR) sets this bit to one, if the transmitter is disabled.

- **COMMTX: ARM7TDMI ICE Debug Communication Channel Transmit Status**

For USART0 only. Refer to the ARM7TDMI Datasheet for a complete description of this flag.

- **COMMRX: ARM7TDMI ICE Debug Communication Channel Receive Status**

For USART0 only. Refer to the ARM7TDMI Datasheet for a complete description of this flag.

17.17 USART Receiver Holding Register

Name: US_RHR

Access Type: Read-only

Offset: 0x18

Reset Value: 0x0

31	30	29	28	27	26	25	24
–	–	–	–	–	–	–	–
23	22	21	20	19	18	17	16
–	–	–	–	–	–	–	–
15	14	13	12	11	10	9	8
–	–	–	–	–	–	–	RXCHR
7	6	5	4	3	2	1	0
RXCHR							

- **RXCHR: Received Character**

Last character received if RXRDY is set. When number of data bits is less than 9 bits, the bits are right-aligned.

All unused bits read zero.

17.18 USART Transmitter Holding Register

Name: US_THR

Access Type: Write-only

Offset: 0x1C

31	30	29	28	27	26	25	24
–	–	–	–	–	–	–	–
23	22	21	20	19	18	17	16
–	–	–	–	–	–	–	–
15	14	13	12	11	10	9	8
–	–	–	–	–	–	–	TXCHR
7	6	5	4	3	2	1	0
TXCHR							

- **TXCHR: Character to be Transmitted**

Next character to be transmitted after the current character if TXRDY is not set. When number of data bits is less than 9 bits, the bits are right-aligned.

17.19 USART Baud Rate Generator Register

Name: US_BRGR

Access Type: Read/Write

Offset: 0x20

Reset Value: 0x0

31	30	29	28	27	26	25	24
–	–	–	–	–	–	–	–
23	22	21	20	19	18	17	16
–	–	–	–	–	–	–	–
15	14	13	12	11	10	9	8
CD							
7	6	5	4	3	2	1	0
CD							

- **CD: Clock Divisor**

This register has no effect if Synchronous Mode is selected with an external clock.

CD	
0	Disables Clock
1	Clock Divisor Bypass [1]
2 to 65535	Baud Rate (Asynchronous Mode [2]) = Selected Clock/(16 x CD) Baud Rate (Synchronous Mode) = Selected Clock/CD

Notes: 1. In Synchronous mode, the value programmed must be even to ensure a 50:50 mark:space ratio.
2. Clock divisor bypass (CD = 1) must not be used when internal clock MCK is selected (USCLKS = 0).

17.20 USART Receiver Time-out Register

Name: US_RTOR

Access Type: Read/Write

Offset: 0x24

Reset Value: 0x0

31	30	29	28	27	26	25	24
–	–	–	–	–	–	–	–
23	22	21	20	19	18	17	16
–	–	–	–	–	–	–	–
15	14	13	12	11	10	9	8
–	–	–	–	–	–	–	–
7	6	5	4	3	2	1	0
TO							

- **TO: Time-out Value**

When a value is written to this register, a Start Time-out Command is automatically performed.

TO	
0	Disables the RX Time-out function.
1- 255	The Time-out counter is loaded with TO when the Start Time-out Command is given or when each new data character is received (after reception has started).

Time-out duration = TO x 4 x Bit period

17.21 USART Transmitter Time-guard Register

Name: US_TTGR

Access Type: Read/Write

Offset: 0x28

Reset Value: 0x0

31	30	29	28	27	26	25	24
–	–	–	–	–	–	–	–
23	22	21	20	19	18	17	16
–	–	–	–	–	–	–	–
15	14	13	12	11	10	9	8
–	–	–	–	–	–	–	–
7	6	5	4	3	2	1	0
TG							

- **TG: Time-guard Value**

TG	
0	Disables the TX Time-guard function.
1 - 255	TXD is inactive high after the transmission of each character for the time-guard duration.

Time-guard duration = TG x Bit period

17.22 USART Receive Pointer Register

Name: US_RPR
Access Type: Read/Write
Offset: 0x30
Reset Value: 0x0

31	30	29	28	27	26	25	24
RXPTR							
23	22	21	20	19	18	17	16
RXPTR							
15	14	13	12	11	10	9	8
RXPTR							
7	6	5	4	3	2	1	0
RXPTR							

- **RXPTR: Receive Pointer**

RXPTR must be loaded with the address of the receive buffer.

17.23 USART Receive Counter Register

Name: US_RCR
Access Type: Read/Write
Offset: 0x34
Reset Value: 0x0

31	30	29	28	27	26	25	24
–	–	–	–	–	–	–	–
23	22	21	20	19	18	17	16
–	–	–	–	–	–	–	–
15	14	13	12	11	10	9	8
RXCTR							
7	6	5	4	3	2	1	0
RXCTR							

- **RXCTR: Receive Counter**

RXCTR must be loaded with the size of the receive buffer.

0: Stop Peripheral Data Transfer dedicated to the receiver.

1-65535: Start Peripheral Data transfer if RXRDY is active.

17.24 USART Transmit Pointer Register

Name: US_TPR

Access Type: Read/Write

Offset: 0x38

Reset Value: 0x0

31	30	29	28	27	26	25	24
TXPTR							
23	22	21	20	19	18	17	16
TXPTR							
15	14	13	12	11	10	9	8
TXPTR							
7	6	5	4	3	2	1	0
TXPTR							

- **TXPTR: Transmit Pointer**

TXPTR must be loaded with the address of the transmit buffer.

17.25 USART Transmit Counter Register

Name: US_TCR

Access Type: Read/Write

Offset: 0x3C

Reset Value: 0x0

31	30	29	28	27	26	25	24
–	–	–	–	–	–	–	–
23	22	21	20	19	18	17	16
–	–	–	–	–	–	–	–
15	14	13	12	11	10	9	8
TXCTR							
7	6	5	4	3	2	1	0
TXCTR							

- **TXCTR: Transmit Counter**

TXCTR must be loaded with the size of the transmit buffer.

0: Stop Peripheral Data Transfer dedicated to the transmitter.

1-65535: Start Peripheral Data transfer if TXRDY is active.

18. TC: Timer/Counter

The AT91M42800A features two Timer/Counter blocks, each containing three identical 16-bit Timer/Counter channels. Each channel can be independently programmed to perform a wide range of functions including frequency measurement, event counting, interval measurement, pulse generation, delay timing and pulse width modulation.

Each Timer/Counter (TC) channel has 3 external clock inputs, 5 internal clock inputs, and 2 multi-purpose input/output signals which can be configured by the user. Each channel drives an internal interrupt signal which can be programmed to generate processor interrupts via the AIC (Advanced Interrupt Controller).

The Timer/Counter block has two global registers which act upon all three TC channels. The Block Control Register allows the three channels to be started simultaneously with the same instruction. The Block Mode Register defines the external clock inputs for each Timer/Counter channel, allowing them to be chained.

Each Timer/Counter block operates independently and has a complete set of block and channel registers. Since they are identical in operation, only one block is described below (see Timer/Counter Description on page 152). The internal configuration of a single Timer/Counter Block is shown in Figure 18-1.

Figure 18-1. TC Block Diagram

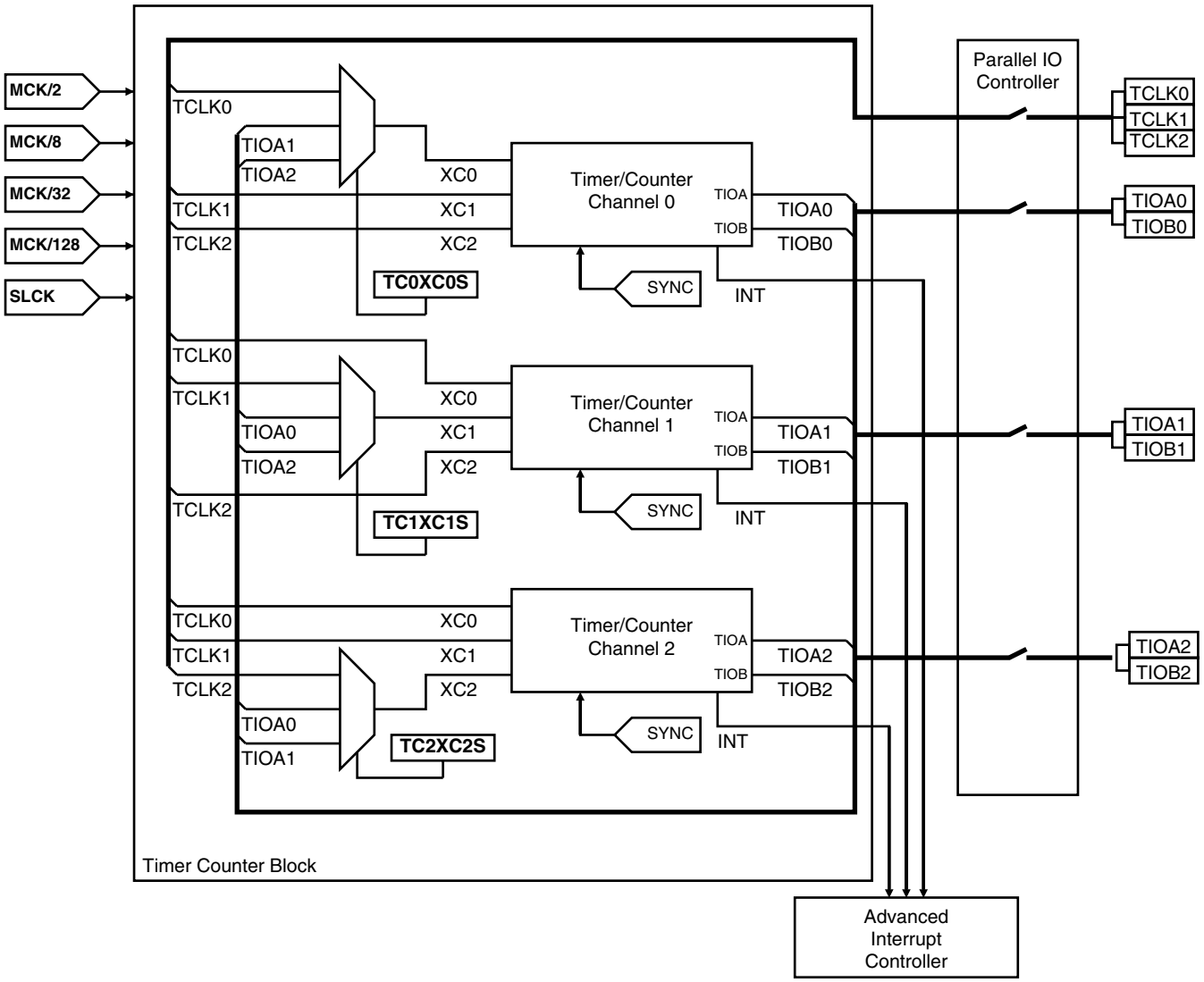

18.1 Signal Name Description[1, 2]

Channel Signals	Description
XC0, XC1, XC2	External Clock Inputs
TIOA	Capture Mode: General-purpose Input Waveform Mode: General-purpose Output
TIOB	Capture Mode: General-purpose Input Waveform Mode: General-purpose Input/Output
INT	Interrupt Signal Output
SYNC	Synchronization Input Signal
Block 0 Signals	**Description**
TCLK0, TCLK1, TCLK2	External Clock Inputs for Channels 0, 1, 2
TIOA0	TIOA Signal for Channel 0
TIOB0	TIOB Signal for Channel 0
TIOA1	TIOA Signal for Channel 1
TIOB1	TIOB Signal for Channel 1
TIOA2	TIOA Signal for Channel 2
TIOB2	TIOB Signal for Channel 2
Block 1 Signals	**Description**
TCLK3, TCLK4, TCLK5	External Clock Inputs for Channels 3, 4, 5
TIOA3	TIOA Signal for Channel 3
TIOB3	TIOB Signal for Channel 3
TIOA4	TIOA Signal for Channel 4
TIOB4	TIOB Signal for Channel 4
TIOA5	TIOA Signal for Channel 5
TIOB5	TIOB Signal for Channel 5

Notes:
1. After a hardware reset, the TC clock is disabled by default (see ”PMC: Power Management Controller” on page 55). The user must configure the Power Management Controller before any access to the User Interface of the TC.
2. After a hardware reset, the Timer/Counter block pins are controlled by the PIO Controller. They must be configured to be controlled by the peripheral before being used.

18.2 Timer/Counter Description

Each Timer/Counter channel is identical in operation. The registers for channel programming are listed in Table 8.

18.2.1 Counter

Each Timer/Counter channel is organized around a 16-bit counter. The value of the counter is incremented at each positive edge of the input clock. When the counter reaches the value 0xFFFF and passes to 0x0000, an overflow occurs and the bit COVFS in TC_SR (Status Register) is set.

The current value of the counter is accessible in real time by reading TC_CV. The counter can be reset by a trigger. In this case, the counter value passes to 0x0000 on the next valid edge of the clock.

18.2.2 Clock Selection

At block level, input clock signals of each channel can either be connected to the external inputs TCLK0, TCLK1 or TCLK2, or be connected to the configurable I/O signals TIOA0, TIOA1 or TIOA2 for chaining by programming the TC_BMR (Block mode).

Each channel can independently select an internal or external clock source for its counter:

- Internal clock signals: MCK/2, MCK/8, MCK/32, MCK/128 and Slow Clock SLCK
- External clock signals: XC0, XC1 or XC2

The selected clock can be inverted with the CLKI bit in TC_CMR (Channel mode). This allows counting on the opposite edges of the clock.

The burst function allows the clock to be validated when an external signal is high. The BURST parameter in the Mode Register defines this signal (none, XC0, XC1, XC2).

Note: In all cases, if an external clock is used, the duration of each of its levels must be longer than the system clock (MCK) period. The external clock frequency must be at least 2.5 times lower than the system clock.

Figure 18-2. Clock Selection

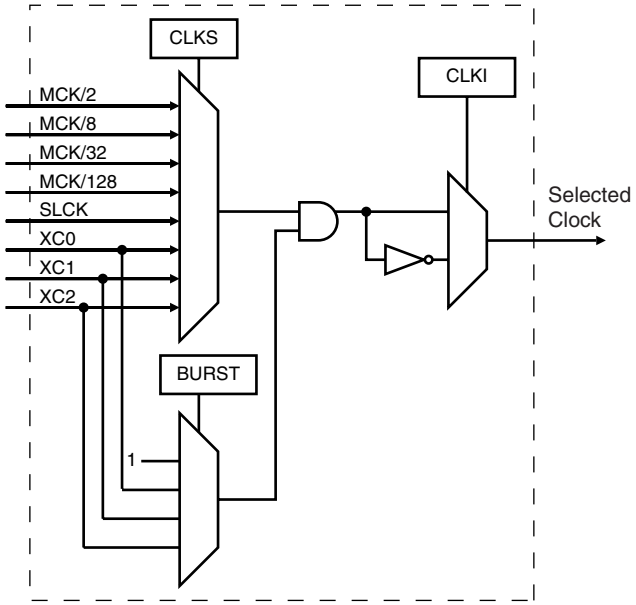

18.2.3 Clock Control

The clock of each counter can be controlled in two different ways: it can be enabled/disabled and started/stopped.

- The clock can be **enabled** or **disabled** by the user with the CLKEN and the CLKDIS commands in the Control Register. In Capture Mode it can be disabled by an RB load event if LDBDIS is set to 1 in TC_CMR. In Waveform Mode, it can be disabled by an RC Compare event if CPCDIS is set to 1 in TC_CMR. When disabled, the start or the stop actions have no effect: only a CLKEN command in the Control Register can re-enable the clock. When the clock is enabled, the CLKSTA bit is set in the Status Register.
- The clock can also be **started** or **stopped**: a trigger (software, synchro, external or compare) always starts the clock. The clock can be stopped by an RB load event in Capture Mode (LDBSTOP = 1 in TC_CMR) or a RC compare event in Waveform Mode (CPCSTOP = 1 in TC_CMR). The start and the stop commands have effect only if the clock is enabled.

Figure 18-3. Clock Control

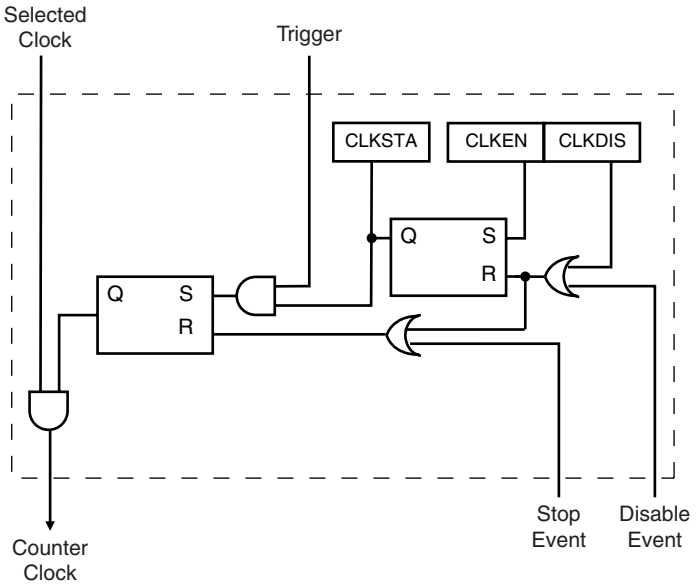

18.2.4 Timer/Counter Operating Modes

Each Timer/Counter channel can independently operate in two different modes:

- Capture mode allows measurement on signals
- Waveform mode allows wave generation

The Timer/Counter mode is programmed with the WAVE bit in the TC Mode Register. In Capture mode, TIOA and TIOB are configured as inputs. In Waveform mode, TIOA is always configured to be an output and TIOB is an output if it is not selected to be the external trigger.

18.2.5 Trigger

A trigger resets the counter and starts the counter clock. Three types of triggers are common to both modes, and a fourth external trigger is available to each mode.

The following triggers are common to both modes:

- Software Trigger: Each channel has a software trigger, available by setting SWTRG in TC_CCR.
- SYNC: Each channel has a synchronization signal SYNC. When asserted, this signal has the same effect as a software trigger. The SYNC signals of all channels are asserted simultaneously by writing TC_BCR (Block Control) with SYNC set.
- Compare RC Trigger: RC is implemented in each channel and can provide a trigger when the counter value matches the RC value if CPCTRG is set in TC_CMR.

The Timer/Counter channel can also be configured to have an external trigger. In Capture Mode, the external trigger signal can be selected between TIOA and TIOB. In Waveform Mode, an external event can be programmed on one of the following signals: TIOB, XC0, XC1 or XC2. This external event can then be programmed to perform a trigger by setting ENETRG in TC_CMR.

If an external trigger is used, the duration of the pulses must be longer than the system clock (MCK) period in order to be detected.

18.3 Capture Operating Mode

This mode is entered by clearing the WAVE parameter in TC_CMR (Channel Mode Register). Capture Mode allows the TC Channel to perform measurements such as pulse timing, frequency, period, duty cycle and phase on TIOA and TIOB signals which are considered as input.

Figure 18-4 shows the configuration of the TC Channel when programmed in Capture Mode.

18.3.1 Capture Registers A and B (RA and RB)

Registers A and B are used as capture registers. This means that they can be loaded with the counter value when a programmable event occurs on the signal TIOA.

The parameter LDRA in TC_CMR defines the TIOA edge for the loading of register A, and the parameter LDRB defines the TIOA edge for the loading of Register B.

RA is loaded only if it has not been loaded since the last trigger or if RB has been loaded since the last loading of RA.

RB is loaded only if RA has been loaded since the last trigger or the last loading of RB.

Loading RA or RB before the read of the last value loaded sets the Overrun Error Flag (LOVRS) in TC_SR (Status Register). In this case, the old value is overwritten.

18.3.2 Trigger Conditions

In addition to the SYNC signal, the software trigger and the RC compare trigger, an external trigger can be defined.

Bit ABETRG in TC_CMR selects input signal TIOA or TIOB as an external trigger. Parameter ETRGEDG defines the edge (rising, falling or both) detected to generate an external trigger. If ETRGEDG = 0 (none), the external trigger is disabled.

18.3.3 Status Register

The following bits in the status register are significant in Capture Operating mode.

- CPCS: RC Compare Status

  There has been an RC Compare match at least once since the last read of the status

- COVFS: Counter Overflow Status

  The counter has attempted to count past $FFFF since the last read of the status

- LOVRS: Load Overrun Status

  RA or RB has been loaded at least twice without any read of the corresponding register, since the last read of the status

- LDRAS: Load RA Status

  RA has been loaded at least once without any read, since the last read of the status

- LDRBS: Load RB Status

  RB has been loaded at least once without any read, since the last read of the status

- ETRGS: External Trigger Status

  An external trigger on TIOA or TIOB has been detected since the last read of the status

Figure 18-4. Capture Mode

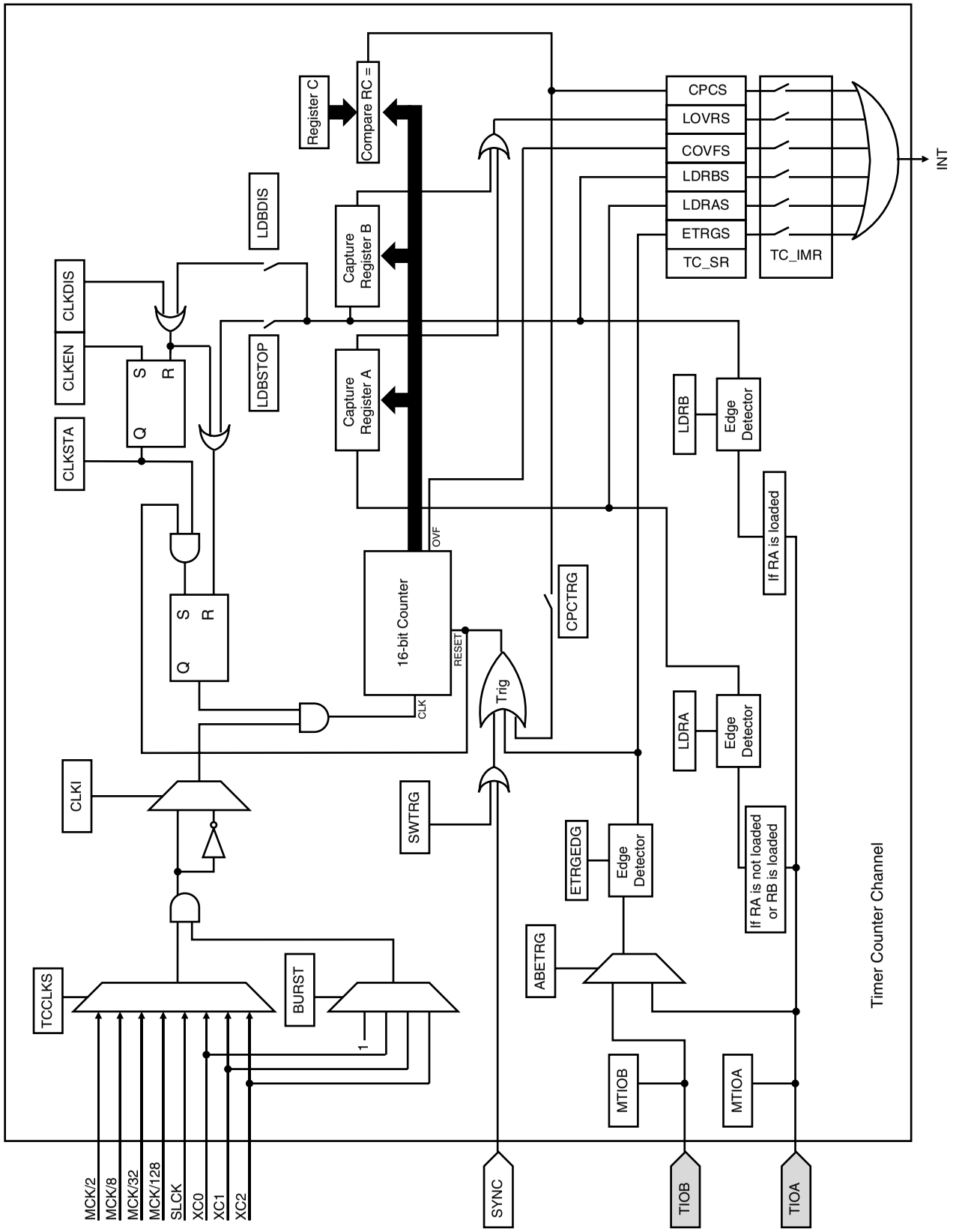

18.4 Waveform Operating Mode

This mode is entered by setting the WAVE parameter in TC_CMR (Channel Mode Register).

Waveform Operating Mode allows the TC Channel to generate 1 or 2 PWM signals with the same frequency and independently programmable duty cycles, or to generate different types of one-shot or repetitive pulses.

In this mode, TIOA is configured as output and TIOB is defined as output if it is not used as an external event (EEVT parameter in TC_CMR).

Figure 18-5 shows the configuration of the TC Channel when programmed in Waveform Operating Mode.

18.4.1 Compare Register A, B and C (RA, RB, and RC)

In Waveform Operating Mode, RA, RB and RC are all used as compare registers.

RA Compare is used to control the TIOA output. RB Compare is used to control the TIOB (if configured as output). RC Compare can be programmed to control TIOA and/or TIOB outputs.

RC Compare can also stop the counter clock (CPCSTOP = 1 in TC_CMR) and/or disable the counter clock (CPCDIS = 1 in TC_CMR).

As in Capture Mode, RC Compare can also generate a trigger if CPCTRG = 1. Trigger resets the counter so RC can control the period of PWM waveforms.

18.4.2 External Event/Trigger Conditions

An external event can be programmed to be detected on one of the clock sources (XC0, XC1, XC2) or TIOB. The external event selected can then be used as a trigger.

The parameter EEVT in TC_CMR selects the external trigger. The parameter EEVTEDG defines the trigger edge for each of the possible external triggers (rising, falling or both). If EEVTEDG is cleared (none), no external event is defined.

If TIOB is defined as an external event signal (EEVT = 0), TIOB is no longer used as output and the TC channel can only generate a waveform on TIOA.

When an external event is defined, it can be used as a trigger by setting bit ENETRG in TC_CMR.

As in Capture Mode, the SYNC signal, the software trigger and the RC compare trigger are also available as triggers.

18.4.3 Output Controller

The output controller defines the output level changes on TIOA and TIOB following an event. TIOB control is used only if TIOB is defined as output (not as an external event).

The following events control TIOA and TIOB: software trigger, external event and RC compare. RA compare controls TIOA and RB compare controls TIOB. Each of these events can be programmed to set, clear or toggle the output as defined in the corresponding parameter in TC_CMR.

The tables below show which parameter in TC_CMR is used to define the effect of each event.

Parameter	TIOA Event
ASWTRG	Software Trigger
AEEVT	External Event
ACPC	RC Compare
ACPA	RA Compare

Parameter	TIOB Event
BSWTRG	Software Trigger
BEEVT	External Event
BCPC	RC Compare
BCPB	RB Compare

If two or more events occur at the same time, the priority level is defined as follows:

1. Software Trigger
2. External Event
3. RC Compare
4. RA or RB Compare

18.4.4 Status

The following bits in the status register are significant in Waveform mode:

- CPAS: RA Compare Status
  There has been a RA Compare match at least once since the last read of the status
- CPBS: RB Compare Status
  There has been a RB Compare match at least once since the last read of the status
- CPCS: RC Compare Status
  There has been a RC Compare match at least once since the last read of the status
- COVFS: Counter Overflow
  Counter has attempted to count past $FFFF since the last read of the status
- ETRGS: External Trigger
  External trigger has been detected since the last read of the status

Figure 18-5. Waveform Mode

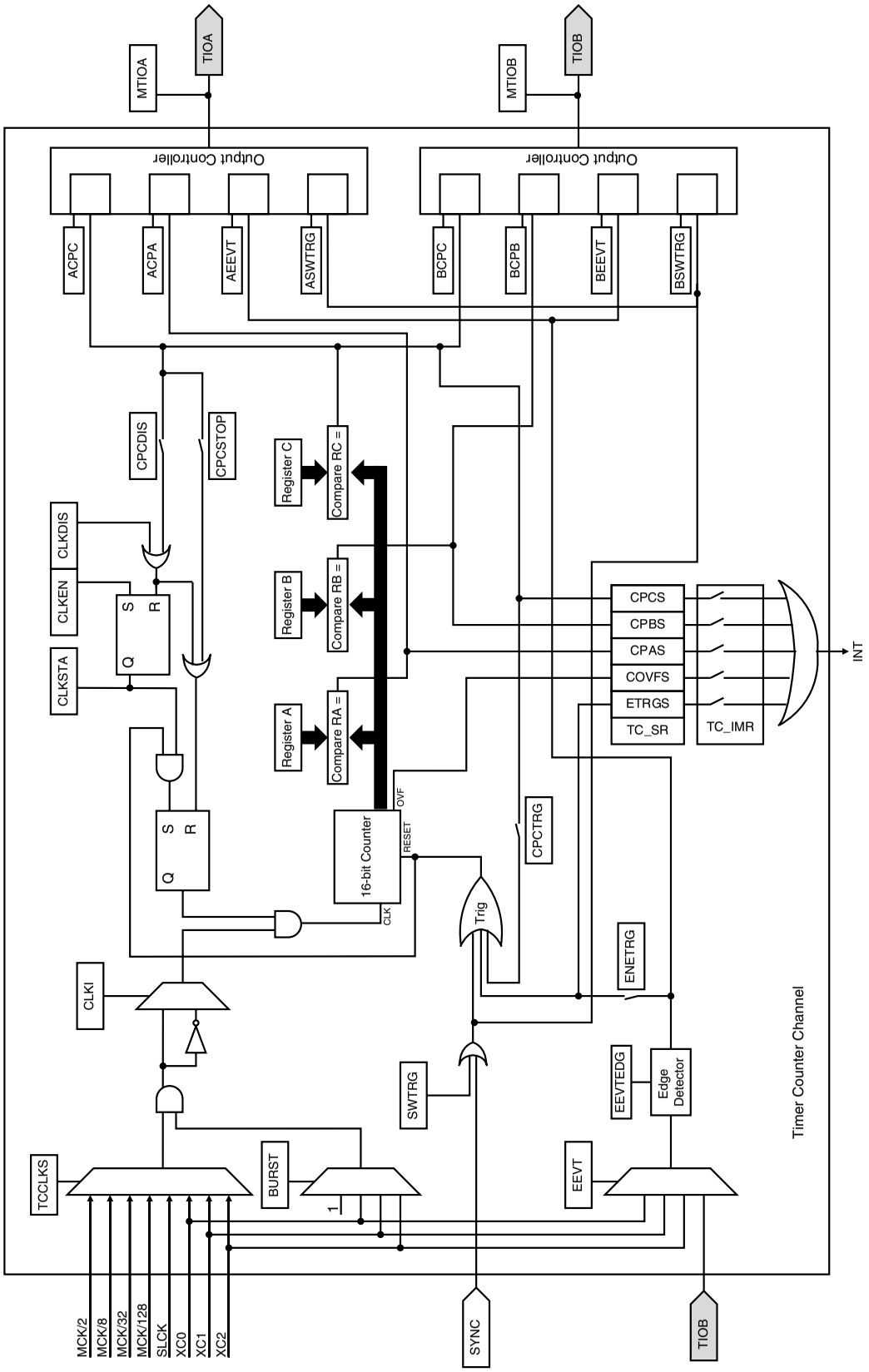

18.5 TC User Interface

TC Block 0 Base Address: 0xFFFD0000 (Code Label `TCB0_BASE`)

TC Block 1 Base Address: 0xFFFD4000 (Code Label `TCB1_BASE`)

Table 7. TC Global Memory Map

Offset	Channel/Register	Name	Access	Reset State
0x00	TC Channel 0	See Table 8		
0x40	TC Channel 1	See Table 8		
0x80	TC Channel 2	See Table 8		
0xC0	TC Block Control Register	TC_BCR	Write-only	–
0xC4	TC Block Mode Register	TC_BMR	Read/Write	0

TC_BCR (Block Control Register) and TC_BMR (Block Mode Register) control the TC block. TC Channels are controlled by the registers listed in Table 8. The offset of each of the Channel registers in Table 8 is in relation to the offset of the corresponding channel as mentioned in Table 7.

Table 8. TC Channel Memory Map

Offset	Register	Name	Access	Reset State
0x00	Channel Control Register	TC_CCR	Write-only	–
0x04	Channel Mode Register	TC_CMR	Read/Write	0
0x08	Reserved			–
0x0C	Reserved			–
0x10	Counter Value	TC_CV	Read/Write	0
0x14	Register A	TC_RA	Read/Write[1]	0
0x18	Register B	TC_RB	Read/Write[1]	0
0x1C	Register C	TC_RC	Read/Write	0
0x20	Status Register	TC_SR	Read-only	–
0x24	Interrupt Enable Register	TC_IER	Write-only	–
0x28	Interrupt Disable Register	TC_IDR	Write-only	–
0x2C	Interrupt Mask Register	TC_IMR	Read-only	0

Note: 1. Read-only if WAVE = 0

18.6 TC Block Control Register

Register Name: TC_BCR

Access Type: Write-only

Offset: 0xC0

31	30	29	28	27	26	25	24
–	–	–	–	–	–	–	–
23	22	21	20	19	18	17	16
–	–	–	–	–	–	–	–
15	14	13	12	11	10	9	8
–	–	–	–	–	–	–	–
7	6	5	4	3	2	1	0
–	–	–	–	–	–	–	SYNC

- **SYNC: Synchro Command (Code Label `TC_SYNC`)**

0 = No effect.

1 = Asserts the SYNC signal which generates a software trigger simultaneously for each of the channels.

18.7 TC Block Mode Register

Register Name: TC_BMR

Access Type: Read/Write

Offset: 0xC4

Reset Value: 0x0

31	30	29	28	27	26	25	24
–	–	–	–	–	–	–	–
23	22	21	20	19	18	17	16
–	–	–	–	–	–	–	–
15	14	13	12	11	10	9	8
–	–	–	–	–	–	–	–
7	6	5	4	3	2	1	0
–	–	TC2XC2S		TC1XC1S		TC0XC0S	

- **TC0XC0S: External Clock Signal 0 Selection**

TC0XC0S		Signal Connected to XC0	Code Label: TC_TC0XC0S
0	0	TCLK0	TC_TCLK0XC0
0	1	None	TC_NONEXC0
1	0	TIOA1	TC_TIOA1XC0
1	1	TIOA2	TC_TIOA2XC0

- **TC1XC1S: External Clock Signal 1 Selection**

TC1XC1S		Signal Connected to XC1	Code Label: TC_TC1XC1S
0	0	TCLK1	TC_TCLK1XC1
0	1	None	TC_NONEXC1
1	0	TIOA0	TC_TIOA0XC1
1	1	TIOA2	TC_TIOA2XC1

- **TC2XC2S: External Clock Signal 2 Selection**

TC2XC2S		Signal Connected to XC2	Code Label: TC_TC2XC2S
0	0	TCLK2	TC_TCLK2XC2
0	1	None	TC_NONEXC2
1	0	TIOA0	TC_TIOA0XC2
1	1	TIOA1	TC_TIOA1XC2

18.8 TC Channel Control Register

Register Name: TC_CCR

Access Type: Write-only

Offset: 0x00

31	30	29	28	27	26	25	24
–	–	–	–	–	–	–	–
23	22	21	20	19	18	17	16
–	–	–	–	–	–	–	–
15	14	13	12	11	10	9	8
–	–	–	–	–	–	–	–
7	6	5	4	3	2	1	0
–	–	–	–	–	SWTRG	CLKDIS	CLKEN

- **CLKEN: Counter Clock Enable Command (Code Label `TC_CLKEN`)**

0 = No effect.

1 = Enables the clock if CLKDIS is not 1.

- **CLKDIS: Counter Clock Disable Command (Code Label `TC_CLKDIS`)**

0 = No effect.

1 = Disables the clock.

- **SWTRG: Software Trigger Command (Code Label `TC_SWTRG`)**

0 = No effect.

1 = A software trigger is performed: the counter is reset and clock is started.

18.9 TC Channel Mode Register: Capture Mode

Register Name: TC_CMR

Access Type: Read/Write

Offset: 0x04

Reset Value: 0x0

31	30	29	28	27	26	25	24
–	–	–	–	–	–	–	–
23	22	21	20	19	18	17	16
–	–	–	–	LDRB		LDRA	
15	14	13	12	11	10	9	8
WAVE=0	CPCTRG	–	–	–	ABETRG	ETRGEDG	
7	6	5	4	3	2	1	0
LDBDIS	LDBSTOP	BURST		CLKI	TCCLKS		

- **TCCLKS: Clock Selection**

TCCLKS			Clock Selected	Code Label: `TC_CLKS`
0	0	0	MCK/2	`TC_CLKS_MCK2`
0	0	1	MCK/8	`TC_CLKS_MCK8`
0	1	0	MCK/32	`TC_CLKS_MCK32`
0	1	1	MCK/128	`TC_CLKS_MCK128`
1	0	0	SLCK	`TC_CLKS_SLCK`
1	0	1	XC0	`TC_CLKS_XC0`
1	1	0	XC1	`TC_CLKS_XC1`
1	1	1	XC2	`TC_CLKS_XC2`

- **CLKI: Clock Invert (Code Label `TC_CLKI`)**

0 = Counter is incremented on rising edge of the clock.

1 = Counter is incremented on falling edge of the clock.

- **BURST: Burst Signal Selection**

BURST		Selected BURST	Code Label: `TC_BURST`
0	0	The clock is not gated by an external signal.	`TC_BURST_NONE`
0	1	XC0 is ANDed with the selected clock.	`TC_BURST_XC0`
1	0	XC1 is ANDed with the selected clock.	`TC_BURST_XC1`
1	1	XC2 is ANDed with the selected clock.	`TC_BURST_XC2`

- **LDBSTOP: Counter Clock Stopped with RB Loading (Code Label `TC_LDBSTOP`)**

0 = Counter clock is not stopped when RB loading occurs.

1 = Counter clock is stopped when RB loading occurs.

- **LDBDIS: Counter Clock Disable with RB Loading (Code Label `TC_LDBDIS`)**

0 = Counter clock is not disabled when RB loading occurs.

1 = Counter clock is disabled when RB loading occurs.

- **ETRGEDG: External Trigger Edge Selection**

ETRGEDG		Edge	Code Label: TC_ETRGEDG
0	0	None	TC_ETRGEDG_EDGE_NONE
0	1	Rising edge	TC_ETRGEDG_RISING_EDGE
1	0	Falling edge	TC_ETRGEDG_FALLING_EDGE
1	1	Each edge	TC_ETRGEDG_BOTH_EDGE

- **ABETRG: TIOA or TIOB External Trigger Selection**

ABETRG	Selected ABETRG	Code Label: TC_ABETRG
0	TIOB is used as an external trigger.	TC_ABETRG_TIOB
1	TIOA is used as an external trigger.	TC_ABETRG_TIOA

- **CPCTRG: RC Compare Trigger Enable (Code Label TC_CPCTRG)**

0 = RC Compare has no effect on the counter and its clock.

1 = RC Compare resets the counter and starts the counter clock.

- **WAVE = 0 (Code Label TC_WAVE)**

0 = Capture Mode is enabled.

1 = Capture Mode is disabled (Waveform Mode is enabled).

- **LDRA: RA Loading Selection**

LDRA		Edge	Code Label: TC_LDRA
0	0	None	TC_LDRA_EDGE_NONE
0	1	Rising edge of TIOA	TC_LDRA_RISING_EDGE
1	0	Falling edge of TIOA	TC_LDRA_FALLING_EDGE
1	1	Each edge of TIOA	TC_LDRA_BOTH_EDGE

- **LDRB: RB Loading Selection**

LDRB		Edge	Code Label: TC_LDRB
0	0	None	TC_LDRB_EDGE_NONE
0	1	Rising edge of TIOA	TC_LDRB_RISING_EDGE
1	0	Falling edge of TIOA	TC_LDRB_FALLING_EDGE
1	1	Each edge of TIOA	TC_LDRB_BOTH_EDGE

18.10 TC Channel Mode Register: Waveform Mode

Register Name: TC_CMR

Access Type: Read/Write

Offset: 0x04

Reset Value: 0x0

31	30	29	28	27	26	25	24
BSWTRG		BEEVT		BCPC		BCPB	
23	22	21	20	19	18	17	16
ASWTRG		AEEVT		ACPC		ACPA	
15	14	13	12	11	10	9	8
WAVE=1	CPCTRG	–	ENETRG	EEVT		EEVTEDG	
7	6	5	4	3	2	1	0
CPCDIS	CPCSTOP	BURST		CLKI	TCCLKS		

- **TCCLKS: Clock Selection**

TCCLKS			Clock Selected	Code Label: TC_CLKS
0	0	0	MCK/2	TC_CLKS_MCK2
0	0	1	MCK/8	TC_CLKS_MCK8
0	1	0	MCK/32	TC_CLKS_MCK32
0	1	1	MCK/128	TC_CLKS_MCK128
1	0	0	SLCK	TC_CLKS_SLCK
1	0	1	XC0	TC_CLKS_XC0
1	1	0	XC1	TC_CLKS_XC1
1	1	1	XC2	TC_CLKS_XC2

- **CLKI: Clock Invert (Code Label TC_CLKI)**

0 = Counter is incremented on rising edge of the clock.

1 = Counter is incremented on falling edge of the clock.

- **BURST: Burst Signal Selection**

BURST		Selected BURST	Code Label: TC_BURST
0	0	The clock is not gated by an external signal.	TC_BURST_NONE
0	1	XC0 is ANDed with the selected clock.	TC_BURST_XC0
1	0	XC1 is ANDed with the selected clock.	TC_BURST_XC1
1	1	XC2 is ANDed with the selected clock.	TC_BURST_XC2

- **CPCSTOP: Counter Clock Stopped with RC Compare (Code Label TC_CPCSTOP)**

0 = Counter clock is not stopped when counter reaches RC.

1 = Counter clock is stopped when counter reaches RC.

- **CPCDIS: Counter Clock Disable with RC Compare (Code Label TC_CPCDIS)**

0 = Counter clock is not disabled when counter reaches RC.

1 = Counter clock is disabled when counter reaches RC.

- **EEVTEDG: External Event Edge Selection**

EEVTEDG		Edge	Code Label: TC_EEVTEDG
0	0	None	TC_EEVTEDG_EDGE_NONE
0	1	Rising edge	TC_EEVTEDG_RISING_EDGE
1	0	Falling edge	TC_EEVTEDG_FALLING_EDGE
1	1	Each edge	TC_EEVTEDG_BOTH_EDGE

- **EEVT: External Event Selection**

EEVT		Signal Selected as External Event	TIOB Direction	Code Label: TC_EEVT
0	0	TIOB	Input(1)	TC_EEVT_TIOB
0	1	XC0	Output	TC_EEVT_XC0
1	0	XC1	Output	TC_EEVT_XC1
1	1	XC2	Output	TC_EEVT_XC2

Note: If TIOB is chosen as the external event signal, it is configured as an input and no longer generates waveforms.

- **ENETRG: External Event Trigger Enable (Code Label TC_ENETRG)**

0 = The external event has no effect on the counter and its clock. In this case, the selected external event only controls the TIOA output.

1 = The external event resets the counter and starts the counter clock.

- **CPCTRG: RC Compare Trigger Enable (Code Label TC_CPCTRG)**

0 = RC Compare has no effect on the counter and its clock.

1 = RC Compare resets the counter and starts the counter clock.

- **WAVE = 1 (Code Label TC_WAVE)**

0 = Waveform Mode is disabled (Capture Mode is enabled).

1 = Waveform Mode is enabled.

- **ACPA: RA Compare Effect on TIOA**

ACPA		Effect	Code Label: TC_ACPA
0	0	None	TC_ACPA_OUTPUT_NONE
0	1	Set	TC_ACPA_SET_OUTPUT
1	0	Clear	TC_ACPA_CLEAR_OUTPUT
1	1	Toggle	TC_ACPA_TOGGLE_OUTPUT

- **ACPC: RC Compare Effect on TIOA**

ACPC		Effect	Code Label: TC_ACPC
0	0	None	TC_ACPC_OUTPUT_NONE
0	1	Set	TC_ACPC_SET_OUTPUT
1	0	Clear	TC_ACPC_CLEAR_OUTPUT
1	1	Toggle	TC_ACPC_TOGGLE_OUTPUT

- **AEEVT: External Event Effect on TIOA**

AEEVT		Effect	Code Label: TC_AEEVT
0	0	None	TC_AEEVT_OUTPUT_NONE
0	1	Set	TC_AEEVT_SET_OUTPUT
1	0	Clear	TC_AEEVT_CLEAR_OUTPUT
1	1	Toggle	TC_AEEVT_TOGGLE_OUTPUT

- **ASWTRG: Software Trigger Effect on TIOA**

ASWTRG		Effect	Code Label: TC_ASWTRG
0	0	None	TC_ASWTRG_OUTPUT_NONE
0	1	Set	TC_ASWTRG_SET_OUTPUT
1	0	Clear	TC_ASWTRG_CLEAR_OUTPUT
1	1	Toggle	TC_ASWTRG_TOGGLE_OUTPUT

- **BCPB: RB Compare Effect on TIOB**

BCPB		Effect	Code Label: TC_BCPB
0	0	None	TC_BCPB_OUTPUT_NONE
0	1	Set	TC_BCPB_SET_OUTPUT
1	0	Clear	TC_BCPB_CLEAR_OUTPUT
1	1	Toggle	TC_BCPB_TOGGLE_OUTPUT

- **BCPC: RC Compare Effect on TIOB**

BCPC		Effect	Code Label: TC_BCPC
0	0	None	TC_BCPC_OUTPUT_NONE
0	1	Set	TC_BCPC_SET_OUTPUT
1	0	Clear	TC_BCPC_CLEAR_OUTPUT
1	1	Toggle	TC_BCPC_TOGGLE_OUTPUT

- **BEEVT: External Event Effect on TIOB**

BEEVT		Effect	Code Label: TC_BEEVT
0	0	None	TC_BEEVT_OUTPUT_NONE
0	1	Set	TC_BEEVT_SET_OUTPUT
1	0	Clear	TC_BEEVT_CLEAR_OUTPUT
1	1	Toggle	TC_BEEVT_TOGGLE_OUTPUT

- **BSWTRG: Software Trigger Effect on TIOB**

BSWTRG		Effect	Code Label: `TC_BSWTRG`
0	0	None	`TC_BSWTRG_OUTPUT_NONE`
0	1	Set	`TC_BSWTRG_SET_OUTPUT`
1	0	Clear	`TC_BSWTRG_CLEAR_OUTPUT`
1	1	Toggle	`TC_BSWTRG_TOGGLE_OUTPUT`

18.11 TC Counter Value Register

Register Name: TC_CV

Access Type: Read-only

Offset: 0x10

Reset Value: 0x0

31	30	29	28	27	26	25	24
–	–	–	–	–	–	–	–
23	22	21	20	19	18	17	16
–	–	–	–	–	–	–	–
15	14	13	12	11	10	9	8
CV							
7	6	5	4	3	2	1	0
CV							

- **CV: Counter Value (Code Label `TC_CV`)**

CV contains the counter value in real time.

18.12 TC Register A

Register Name: TC_RA

Access Type: Read-only if WAVE = 0, Read/Write if WAVE = 1

Offset: 0x14

Reset Value: 0x0

31	30	29	28	27	26	25	24
–	–	–	–	–	–	–	–
23	22	21	20	19	18	17	16
–	–	–	–	–	–	–	–
15	14	13	12	11	10	9	8
RA							
7	6	5	4	3	2	1	0
RA							

- **RA: Register A (Code Label `TC_RA`)**

RA contains the Register A value in real time.

18.13 TC Register B

Register Name: TC_RB

Access Type: Read-only if WAVE = 0, Read/Write if WAVE = 1

Offset: 0x18

Reset Value: 0x0

31	30	29	28	27	26	25	24
–	–	–	–	–	–	–	–
23	22	21	20	19	18	17	16
–	–	–	–	–	–	–	–
15	14	13	12	11	10	9	8
RB							
7	6	5	4	3	2	1	0
RB							

- **RB: Register B (Code Label `TC_RB`)**

RB contains the Register B value in real time.

18.14 TC Register C

Register Name: TC_RC

Access Type: Read/Write

Offset: 0x1C

Reset Value: 0x0

31	30	29	28	27	26	25	24
–	–	–	–	–	–	–	–
23	22	21	20	19	18	17	16
–	–	–	–	–	–	–	–
15	14	13	12	11	10	9	8
RC							
7	6	5	4	3	2	1	0
RC							

- **RC: Register C (Code Label `TC_RC`)**

RC contains the Register C value in real time.

18.15 TC Status Register

Register Name: TC_SR

Access Type: Read-only

Offset: 0x20

31	30	29	28	27	26	25	24
–	–	–	–	–	–	–	–
23	22	21	20	19	18	17	16
–	–	–	–	–	MTIOB	MTIOA	CLKSTA
15	14	13	12	11	10	9	8
–	–	–	–	–	–	–	–
7	6	5	4	3	2	1	0
ETRGS	LDRBS	LDRAS	CPCS	CPBS	CPAS	LOVRS	COVFS

- **COVFS: Counter Overflow Status (Code Label `TC_COVFS`)**

0 = No counter overflow has occurred since the last read of the Status Register.

1 = A counter overflow has occurred since the last read of the Status Register.

- **LOVRS: Load Overrun Status (Code Label `TC_LOVRS`)**

0 = Load overrun has not occurred since the last read of the Status Register or WAVE = 1.

1 = RA or RB have been loaded at least twice without any read of the corresponding register since the last read of the Status Register, if WAVE = 0.

- **CPAS: RA Compare Status (Code Label `TC_CPAS`)**

0 = RA Compare has not occurred since the last read of the Status Register or WAVE = 0.

1 = RA Compare has occurred since the last read of the Status Register, if WAVE = 1.

- **CPBS: RB Compare Status (Code Label `TC_CPBS`)**

0 = RB Compare has not occurred since the last read of the Status Register or WAVE = 0.

1 = RB Compare has occurred since the last read of the Status Register, if WAVE = 1.

- **CPCS: RC Compare Status (Code Label `TC_CPCS`)**

0 = RC Compare has not occurred since the last read of the Status Register.

1 = RC Compare has occurred since the last read of the Status Register.

- **LDRAS: RA Loading Status (Code Label `TC_LDRAS`)**

0 = RA Load has not occurred since the last read of the Status Register or WAVE = 1.

1 = RA Load has occurred since the last read of the Status Register, if WAVE = 0.

- **LDRBS: RB Loading Status (Code Label `TC_LDRBS`)**

0 = RB Load has not occurred since the last read of the Status Register or WAVE = 1.

1 = RB Load has occurred since the last read of the Status Register, if WAVE = 0.

- **ETRGS: External Trigger Status (Code Label `TC_ETRGS`)**

0 = External trigger has not occurred since the last read of the Status Register.

1 = External trigger has occurred since the last read of the Status Register.

- **CLKSTA: Clock Enabling Status (Code Label `TC_CLKSTA`)**

0 = Clock is disabled.

1 = Clock is enabled.

- **MTIOA: TIOA Mirror (Code Label `TC_MTIOA`)**

0 = TIOA is low. If WAVE = 0, this means that TIOA pin is low. If WAVE = 1, this means that TIOA is driven low.

1 = TIOA is high. If WAVE = 0, this means that TIOA pin is high. If WAVE = 1, this means that TIOA is driven high.

- **MTIOB: TIOB Mirror (Code Label `TC_MTIOB`)**

0 = TIOB is low. If WAVE = 0, this means that TIOB pin is low. If WAVE = 1, this means that TIOB is driven low.

1 = TIOB is high. If WAVE = 0, this means that TIOB pin is high. If WAVE = 1, this means that TIOB is driven high.

18.16 TC Interrupt Enable Register

Register Name: TC_IER

Access Type: Write-only

Offset: 0x24

31	30	29	28	27	26	25	24
–	–	–	–	–	–	–	–
23	22	21	20	19	18	17	16
–	–	–	–	–	–	–	–
15	14	13	12	11	10	9	8
–	–	–	–	–	–	–	–
7	6	5	4	3	2	1	0
ETRGS	LDRBS	LDRAS	CPCS	CPBS	CPAS	LOVRS	COVFS

- **COVFS: Counter Overflow (Code Label `TC_COVFS`)**

0 = No effect.

1 = Enables the Counter Overflow Interrupt.

- **LOVRS: Load Overrun (Code Label `TC_LOVRS`)**

0 = No effect.

1: Enables the Load Overrun Interrupt.

- **CPAS: RA Compare (Code Label `TC_CPAS`)**

0 = No effect.

1 = Enables the RA Compare Interrupt.

- **CPBS: RB Compare (Code Label `TC_CPBS`)**

0 = No effect.

1 = Enables the RB Compare Interrupt.

- **CPCS: RC Compare (Code Label `TC_CPCS`)**

0 = No effect.

1 = Enables the RC Compare Interrupt.

- **LDRAS: RA Loading (Code Label `TC_LDRAS`)**

0 = No effect.

1 = Enables the RA Load Interrupt.

- **LDRBS: RB Loading (Code Label `TC_LDRBS`)**

0 = No effect.

1 = Enables the RB Load Interrupt.

- **ETRGS: External Trigger (Code Label `TC_ETRGS`)**

0 = No effect.

1 = Enables the External Trigger Interrupt.

18.17 TC Interrupt Disable Register

Register Name: TC_IDR

Access Type: Write-only

Offset: 0x28

31	30	29	28	27	26	25	24
–	–	–	–	–	–	–	–

23	22	21	20	19	18	17	16
–	–	–	–	–	–	–	–

15	14	13	12	11	10	9	8
–	–	–	–	–	–	–	–

7	6	5	4	3	2	1	0
ETRGS	LDRBS	LDRAS	CPCS	CPBS	CPAS	LOVRS	COVFS

- **COVFS: Counter Overflow (Code Label `TC_COVFS`)**

0 = No effect.

1 = Disables the Counter Overflow Interrupt.

- **LOVRS: Load Overrun (Code Label `TC_LOVRS`)**

0 = No effect.

1 = Disables the Load Overrun Interrupt (if WAVE = 0).

- **CPAS: RA Compare (Code Label `TC_CPAS`)**

0 = No effect.

1 = Disables the RA Compare Interrupt (if WAVE = 1).

- **CPBS: RB Compare (Code Label `TC_CPBS`)**

0 = No effect.

1 = Disables the RB Compare Interrupt (if WAVE = 1).

- **CPCS: RC Compare (Code Label `TC_CPCS`)**

0 = No effect.

1 = Disables the RC Compare Interrupt.

- **LDRAS: RA Loading (Code Label `TC_LDRAS`)**

0 = No effect.

1 = Disables the RA Load Interrupt (if WAVE = 0).

- **LDRBS: RB Loading (Code Label `TC_LDRBS`)**

0 = No effect.

1 = Disables the RB Load Interrupt (if WAVE = 0).

- **ETRGS: External Trigger (Code Label `TC_ETRGS`)**

0 = No effect.

1 = Disables the External Trigger Interrupt.

18.18 TC Interrupt Mask Register

Register Name: TC_IMR

Access Type: Read-only

Offset: 0x2C

Reset Value: 0x0

31	30	29	28	27	26	25	24
–	–	–	–	–	–	–	–
23	22	21	20	19	18	17	16
–	–	–	–	–	–	–	–
15	14	13	12	11	10	9	8
–	–	–	–	–	–	–	–
7	6	5	4	3	2	1	0
ETRGS	LDRBS	LDRAS	CPCS	CPBS	CPAS	LOVRS	COVFS

- **COVFS: Counter Overflow (Code Label `TC_COVFS`)**

0 = The Counter Overflow Interrupt is disabled.

1 = The Counter Overflow Interrupt is enabled.

- **LOVRS: Load Overrun (Code Label `TC_LOVRS`)**

0 = The Load Overrun Interrupt is disabled.

1 = The Load Overrun Interrupt is enabled.

- **CPAS: RA Compare (Code Label `TC_CPAS`)**

0 = The RA Compare Interrupt is disabled.

1 = The RA Compare Interrupt is enabled.

- **CPBS: RB Compare (Code Label `TC_CPBS`)**

0 = The RB Compare Interrupt is disabled.

1 = The RB Compare Interrupt is enabled.

- **CPCS: RC Compare (Code Label `TC_CPCS`)**

0 = The RC Compare Interrupt is disabled.

1 = The RC Compare Interrupt is enabled.

- **LDRAS: RA Loading (Code Label `TC_LDRAS`)**

0 = The Load RA Interrupt is disabled.

1 = The Load RA Interrupt is enabled.

- **LDRBS: RB Loading (Code Label `TC_LDRBS`)**

0 = The Load RB Interrupt is disabled.

1 = The Load RB Interrupt is enabled.

- **ETRGS: External Trigger (Code Label `TC_ETRGS`)**

0 = The External Trigger Interrupt is disabled.

1 = The External Trigger Interrupt is enabled.

19. SPI: Serial Peripheral Interface

The AT91M42800A includes two SPIs which provide communication with external devices in master or slave mode. They are independent, and are referred to by the letters A and B.

19.1 Pin Description

Seven pins are associated with the SPI Interface. When not needed for the SPI function, each of these pins can be configured as a PIO. Support for an external master is provided by the PIO Controller Multi-driver option. To configure an SPI pin as open-drain to support external drivers, set the corresponding bits in the PIO_MDSR register (see page 114).

An input filter can be enabled on the SPI input pins by setting the corresponding bits in the PIO_IFSR (see page 108). The NPCS0/NSS pin can function as a peripheral chip select output or slave select input. Refer to Table 19-1 on page 180 for a description of the SPI pins.

Figure 19-1. SPI Block Diagram

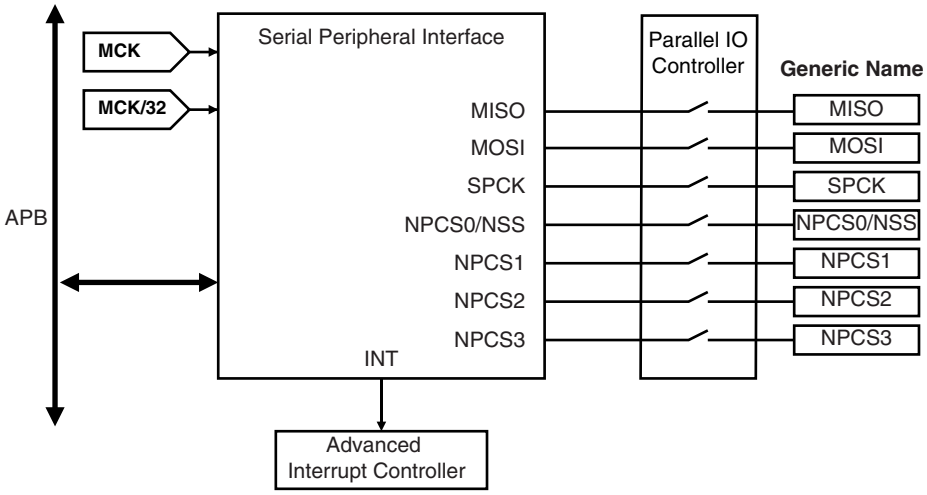

Table 19-1. SPI Pins

Pin Name	Generic Mnemonic	Mode	Function
Master In Slave Out	MISO	Master Slave	Serial data input to SPI Serial data output from SPI
Master Out Slave In	MOSI	Master Slave	Serial data output from SPI Serial data input to SPI
Serial Clock	SPCK	Master Slave	Clock output from SPI Clock input to SPI
Peripheral Chip Selects	NPCS1-NPCS3	Master	Select peripherals
Peripheral Chip Select/ Slave Select	NPCS0/ NSS	Master Master Slave	Output: Selects peripheral Input: low causes mode fault Input: chip select for SPI

Notes:
1. After a hardware reset, the SPI clock is disabled by default (see "PMC: Power Management Controller" on page 55). The user must configure the Power Management Controller before any access to the User Interface of the SPI.
2. After a hardware reset, the SPI pins are deselected by default (see "PIO: Parallel I/O Controller" on page 97). The user must configure the PIO Controller to enable the corresponding pins for their SPI function. NPCS0/NSS must be configured as open-drain in the Parallel I/O Controller for multi-master operation.

19.2 Master Mode

In Master mode, the SPI controls data transfers to and from the slave(s) connected to the SPI bus. The SPI drives the chip select(s) to the slave(s) and the serial clock (SPCK). After enabling the SPI, a data transfer begins when the ARM core writes to the SP_TDR (Transmit Data Register). See Table 14-1 on page 82.

Transmit and Receive buffers maintain the data flow at a constant rate with a reduced requirement for high priority interrupt servicing. When new data is available in the SP_TDR (Transmit Data Register) the SPI continues to transfer data. If the SP_RDR (Receive Data Register) has not been read before new data is received, the Overrun Error (OVRES) flag is set.

The delay between the activation of the chip select and the start of the data transfer (DLYBS) as well as the delay between each data transfer (DLYBCT) can be programmed for each of the four external chip selects. All data transfer characteristics including the two timing values are programmed in registers SP_CSR0 to SP_CSR3 (Chip Select Registers). See Table 14-1 on page 82.

In master mode the peripheral selection can be defined in two different ways:

- Fixed Peripheral Select: SPI exchanges data with only one peripheral
- Variable Peripheral Select: Data can be exchanged with more than one peripheral

Figures 19-2 and 19-3 show the operation of the SPI in Master mode. For details concerning the flag and control bits in these diagrams, see the tables in Section 19.7 "SPI Programmer's Model" on page 187.

19.2.1 Fixed Peripheral Select

This mode is ideal for transferring memory blocks without the extra overhead in the transmit data register to determine the peripheral.

Fixed Peripheral Select is activated by setting bit PS to zero in SP_MR (Mode Register). The peripheral is defined by the PCS field, also in SP_MR.

This option is only available when the SPI is programmed in master mode.

19.2.2 Variable Peripheral Select

Variable Peripheral Select is activated by setting bit PS to one. The PCS field in SP_TDR (Transmit Data Register) is used to select the destination peripheral. The data transfer characteristics are changed when the selected peripheral changes, according to the associated chip select register.

The PCS field in the SP_MR has no effect.

This option is only available when the SPI is programmed in master mode.

19.2.3 Chip Selects

The Chip Select lines are driven by the SPI only if it is programmed in Master mode. These lines are used to select the destination peripheral. The PCSDEC field in SP_MR (Mode Register) selects 1 to 4 peripherals (PCSDEC = 0) or up to 15 peripherals (PCSDEC = 1).

If Variable Peripheral Select is active, the chip select signals are defined for each transfer in the PCS field in SP_TDR. Chip select signals can thus be defined independently for each transfer.

If Fixed Peripheral Select is active, Chip Select signals are defined for all transfers by the field PCS in SP_MR. If a transfer with a new peripheral is necessary, the software must wait until the current transfer is completed, then change the value of PCS in SP_MR before writing new data in SP_TDR.

The value on the NPCS pins at the end of each transfer can be read in the SP_RDR (Receive Data Register). By default, all NPCS signals are high (equal to one) before and after each transfer.

19.2.4 Mode Fault Detection

A mode fault is detected when the SPI is programmed in Master Mode and a low level is driven by an external master on the NPCSA/NSS signal.

When a mode fault is detected, the MODF bit in the SP_SR is set until the SP_SR is read and the SPI is disabled until re-enabled by bit SPIEN in the SP_CR (Control Register).

Figure 19-2. Functional Flow Diagram in Master Mode

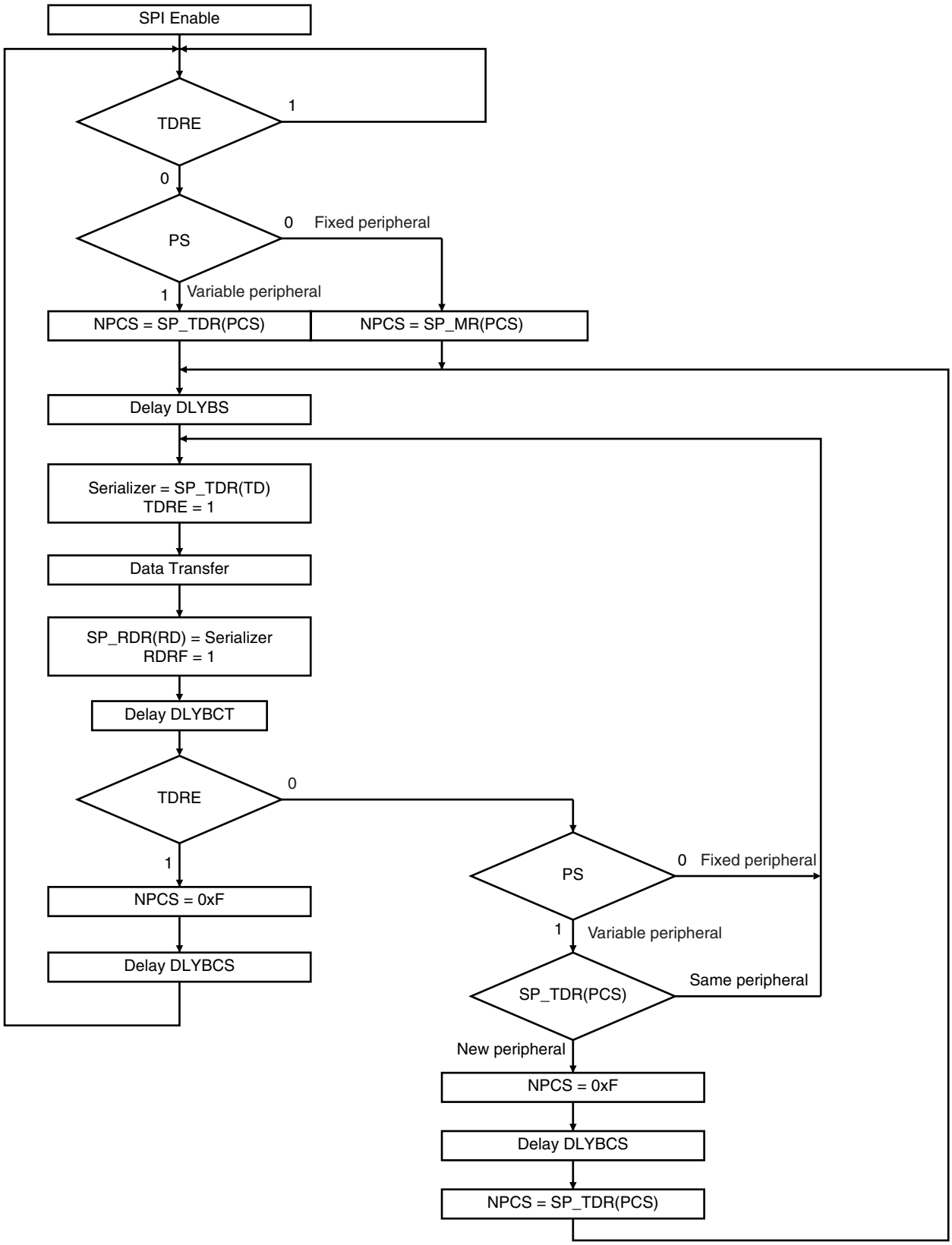

Figure 19-3. SPI in Master Mode

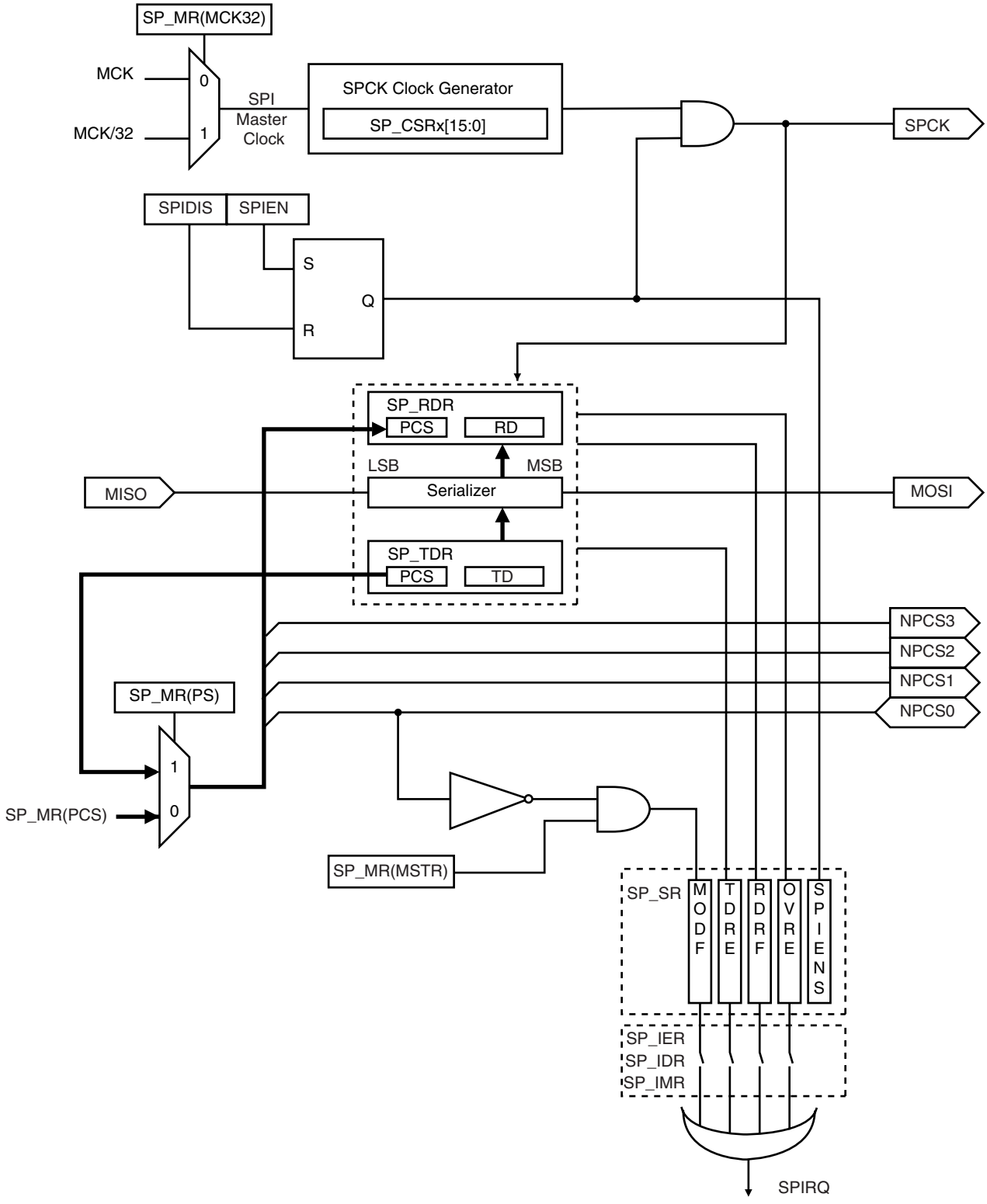

19.3 Slave Mode

In Slave Mode, the SPI waits for NSS to go active low before receiving the serial clock from an external master.

In slave mode CPOL, NCPHA and BITS fields of SP_CSR0 are used to define the transfer characteristics. The other Chip Select Registers are not used in slave mode.

Figure 19-4. SPI in Slave Mode

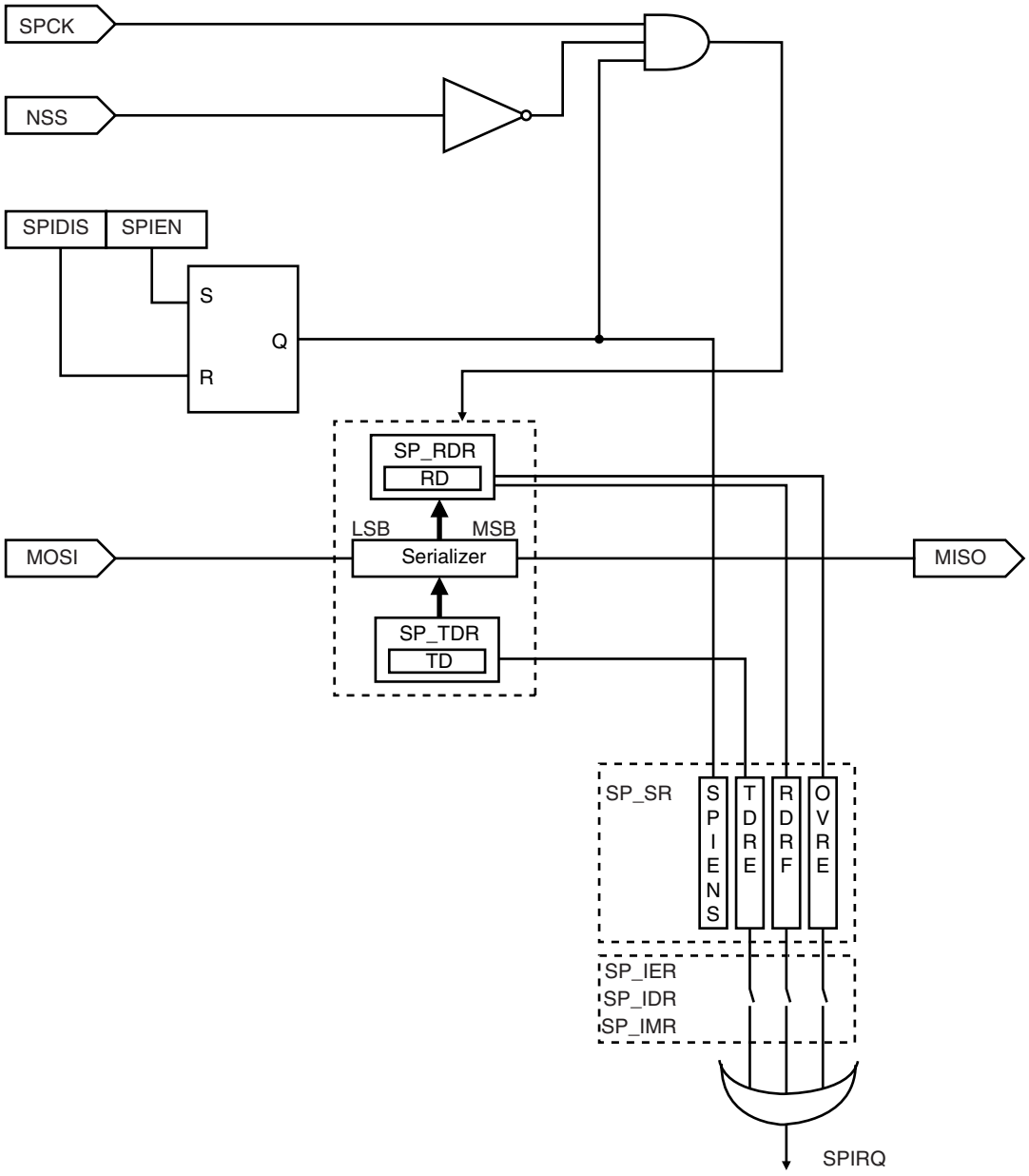

19.4 Data Transfer

The following waveforms show examples of data transfers.

Figure 19-5. SPI Transfer Format (NCPHA = 1, 8 Bits per Transfer)

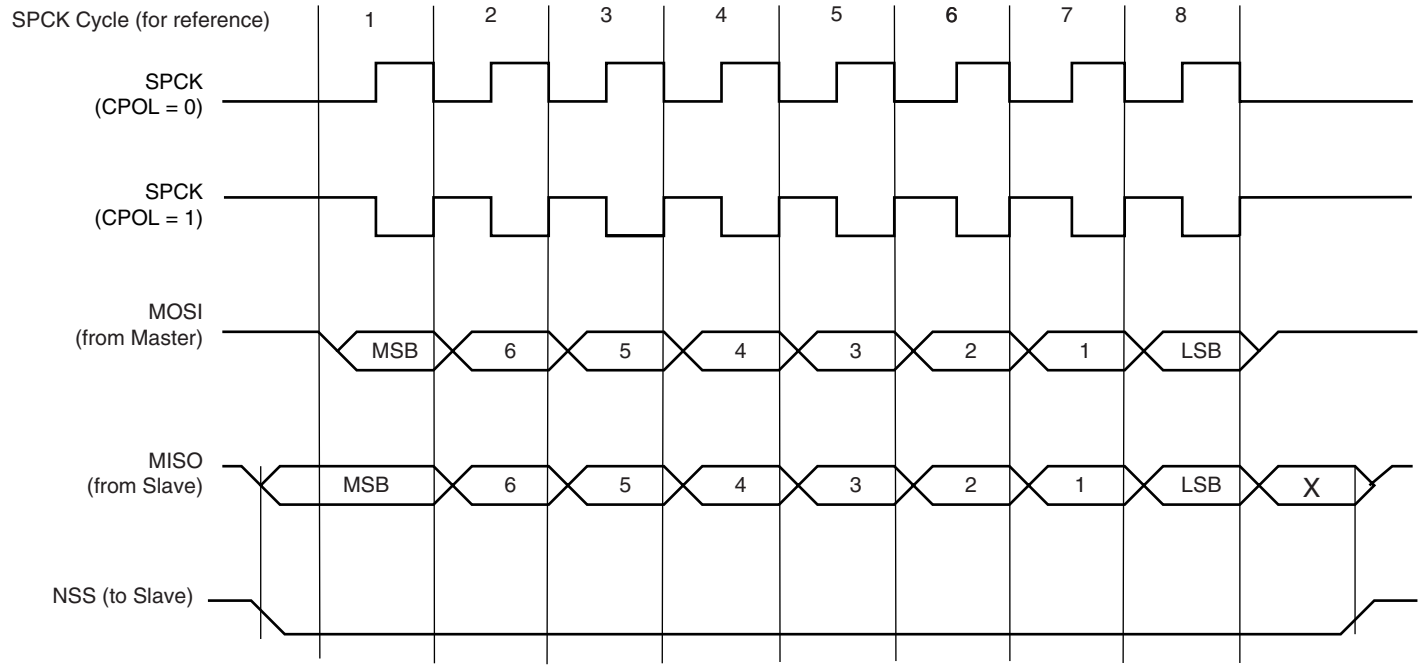

Figure 19-6. SPI Transfer Format (NCPHA = 0, 8 Bits per Transfer)

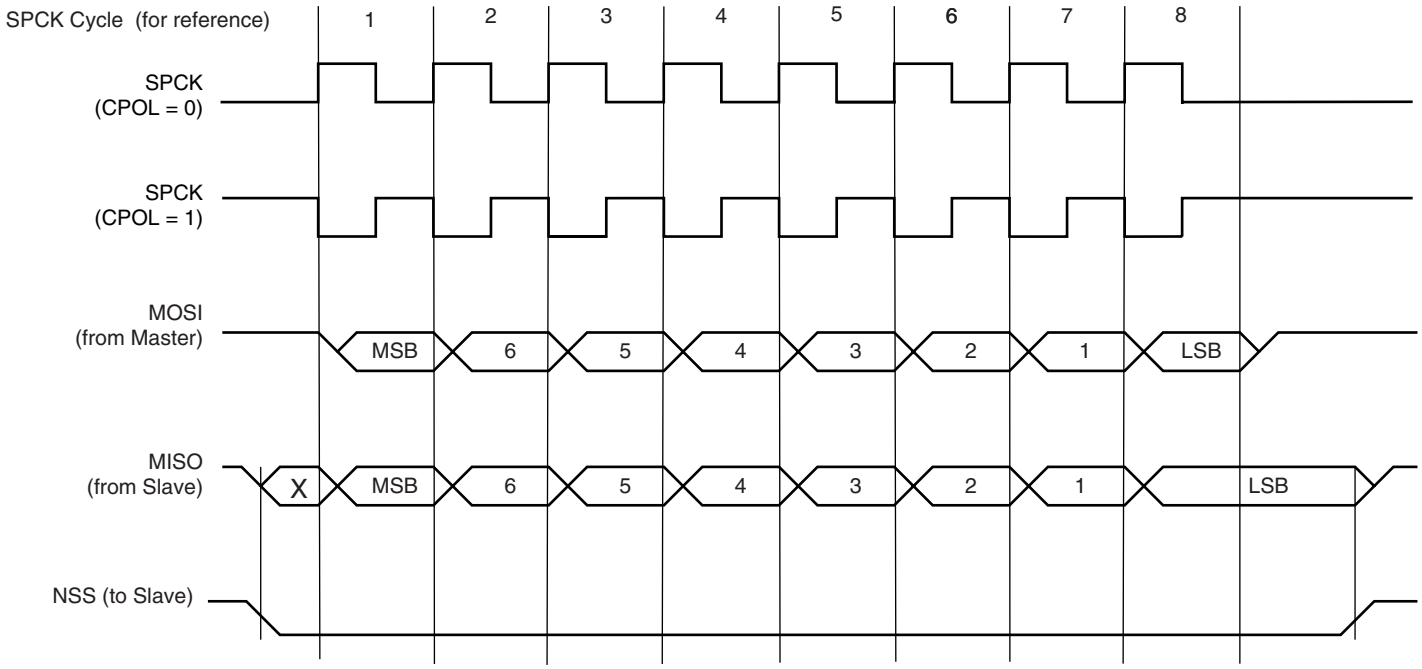

Figure 19-7. Programmable Delays (DLYBCS, DLYBS and DLYBCT)

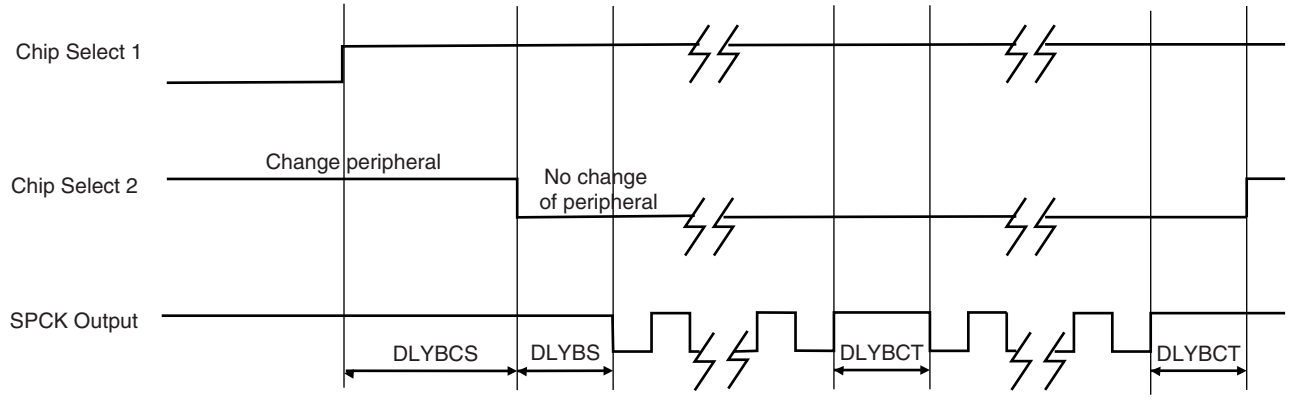

19.5 Clock Generation

In Master Mode the SPI Master Clock is either MCK or MCK/32, as defined by the MCK32 field of SP_MR. The SPI baud rate clock is generated by dividing the SPI Master Clock by a value between 4 and 510. The divisor is defined in the SCBR field in each Chip Select Register. The transfer speed can thus be defined independently for each chip select signal.

CPOL and NCPHA in the Chip Select Registers define the clock/data relationship between master and slave devices. CPOL defines the inactive value of the SPCK. NCPHA defines which edge causes data to change and which edge causes data to be captured.

In Slave Mode, the input clock low and high pulse duration must strictly be longer than two system clock (MCK) periods.

19.6 Peripheral Data Controller

Each SPI is closely connected to two Peripheral Data Controller channels. One is dedicated to the receiver. The other is dedicated to the transmitter.

The PDC channel is programmed using SP_TPR (Transmit Pointer) and SP_TCR (Transmit Counter) for the transmitter and SP_RPR (Receive Pointer) and SP_RCR (Receive Counter) for the receiver. The status of the PDC is given in SP_SR by the SPENDTX bit for the transmitter and by the SPENDRX bit for the receiver.

The pointer registers (SP_TPR and SP_RPR) are used to store the address of the transmit or receive buffers. The counter registers (SP_TCR and SP_RCR) are used to store the size of these buffers.

The receiver data transfer is triggered by the RDRF bit and the transmitter data transfer is triggered by TDRE. When a transfer is performed, the counter is decremented and the pointer is incremented. When the counter reaches 0, the status bit is set (SPENDRX for the receiver, SPENDTX for the transmitter in SP_SR) and can be programmed to generate an interrupt. While the counter is at zero, the status bit is asserted and transfers are disabled.

19.7 SPI Programmer's Model

SPIA Base Address: 0xFFFC8000

SPIB Base Address: 0xFFFCC000

Table 9. SPI Memory Map

Offset	Register	Name	Access	Reset State
0x00	Control Register	SP_CR	Write-only	–
0x04	Mode Register	SP_MR	Read/Write	0
0x08	Receive Data Register	SP_RDR	Read-only	0
0x0C	Transmit Data Register	SP_TDR	Write-only	–
0x10	Status Register	SP_SR	Read-only	0
0x14	Interrupt Enable Register	SP_IER	Write-only	–
0x18	Interrupt Disable Register	SP_IDR	Write-only	–
0x1C	Interrupt Mask Register	SP_IMR	Read-only	0
0x20	Receive Pointer Register	SP_RPR	Read/Write	0
0x24	Receive Counter Register	SP_RCR	Read/Write	0
0x28	Transmit Pointer Register	SP_TPR	Read/Write	0
0x2C	Transmit Counter Register	SP_TCR	Read/Write	0
0x30	Chip Select Register 0	SP_CSR0	Read/Write	0
0x34	Chip Select Register 1	SP_CSR1	Read/Write	0
0x38	Chip Select Register 2	SP_CSR2	Read/Write	0
0x3C	Chip Select Register 3	SP_CSR3	Read/Write	0

19.8 SPI Control Register

Register Name: SP_CR

Access Type: Write-only

Offset: 0x00

31	30	29	28	27	26	25	24
–	–	–	–	–	–	–	–
23	22	21	20	19	18	17	16
–	–	–	–	–	–	–	–
15	14	13	12	11	10	9	8
–	–	–	–	–	–	–	–
7	6	5	4	3	2	1	0
SWRST	–	–	–	–	–	SPIDIS	SPIEN

- **SPIEN: SPI Enable (Code Label `SP_SPIEN`)**

0 = No effect.

1 = Enables the SPI to transfer and receive data.

- **SPIDIS: SPI Disable (Code Label `SP_SPIDIS`)**

0 = No effect.

1 = Disables the SPI.

All pins are set in input mode and no data is received or transmitted.

If a transfer is in progress, the transfer is finished before the SPI is disabled.

If both SPIEN and SPIDIS are equal to one when the control register is written, the SPI is disabled.

- **SWRST: SPI Software reset (Code Label `SP_SWRST`)**

0 = No effect.

1 = Resets the SPI.

A software triggered hardware reset of the SPI interface is performed.

19.9 SPI Mode Register

Register Name: SP_MR

Access Type: Read/Write

Offset: 0x04

Reset Value: 0x0

31	30	29	28	27	26	25	24
DLYBCS							
23	22	21	20	19	18	17	16
–	–	–	–	PCS			
15	14	13	12	11	10	9	8
–	–	–	–	–	–	–	–
7	6	5	4	3	2	1	0
LLB	–	–	–	MCK32	PCSDEC	PS	MSTR

- **MSTR: Master/Slave Mode (Code Label `SP_MSTR`)**

0 = SPI is in Slave mode.

1 = SPI is in Master mode.

MSTR configures the SPI Interface for either master or slave mode operation.

- **PS: Peripheral Select**

PS	Selected PS	Code Label: `SP_PS`
0	Fixed Peripheral Select	SP_PS_FIXED
1	Variable Peripheral Select	SP_PS_VARIABLE

- **PCSDEC: Chip Select Decode (Code Label `SP_PCSDEC`)**

0 = The chip selects are directly connected to a peripheral device.

1 = The four chip select lines are connected to a 4- to 16-bit decoder.

When PCSDEC equals one, up to 16 Chip Select signals can be generated with the four lines using an external 4- to 16-bit decoder.

The Chip Select Registers define the characteristics of the 16 chip selects according to the following rules:

SP_CSR0 defines peripheral chip select signals 0 to 3.

SP_CSR1 defines peripheral chip select signals 4 to 7.

SP_CSR2 defines peripheral chip select signals 8 to 11.

SP_CSR3 defines peripheral chip select signals 12 to 15[(1)].

Note: 1. The 16th state corresponds to a state in which all chip selects are inactive. This allows a different clock configuration to be defined by each chip select register.

- **MCK32: Clock Selection (Code Label `SP_DIV32`)**

0 = SPI Master Clock equals MCK

1 = SPI Master Clock equals MCK/32

- **LLB: Local Loopback Enable (Code Label `SP_LLB`)**

0 = Local loopback path disabled

1 = Local loopback path enabled

LLB controls the local loopback on the data serializer for testing in master mode only.

- **PCS: Peripheral Chip Select (Code Label `SP_PCS`)**

This field is only used if Fixed Peripheral Select is active (PS = 0).

If PCSDEC=0:

PCS = xxx0 NPCS[3:0] = 1110

PCS = xx01 NPCS[3:0] = 1101

PCS = x011 NPCS[3:0] = 1011

PCS = 0111 NPCS[3:0] = 0111

PCS = 1111 forbidden (no peripheral is selected)

(x = don't care)

If PCSDEC=1: NPCS[3:0] output signals = PCS

- **DLYBCS: Delay Between Chip Selects (Code Label `SP_DLYBCS`)**

This field defines the delay from NPCS inactive to the activation of another NPCS. The DLYBCS time guarantees non-overlapping chip selects and solves bus contentions in case of peripherals having long data float times.

If DLYBCS is less than or equal to six, six SPI Master Clock periods will be inserted by default.

Otherwise, the following equation determines the delay:

Delay_ Between_Chip_Selects = DLYBCS • SPI_Master_Clock_period

19.10 SPI Receive Data Register

Register Name: SP_RDR

Access Type: Read-only

Offset: 0x08

Reset Value: 0x0

31	30	29	28	27	26	25	24
–	–	–	–	–	–	–	–

23	22	21	20	19	18	17	16
–	–	–	–	PCS			

15	14	13	12	11	10	9	8
RD							

7	6	5	4	3	2	1	0
RD							

- **RD: Receive Data (Code Label `SP_RD`)**

Data received by the SPI Interface is stored in this register right-justified. Unused bits read zero.

- **PCS: Peripheral Chip Select Status**

In Master Mode only, these bits indicate the value on the NPCS pins at the end of a transfer. Otherwise, these bits read zero.

19.11 SPI Transmit Data Register

Register Name: SP_TDR

Access Type: Write-only

Offset: 0x0C

31	30	29	28	27	26	25	24
–	–	–	–	–	–	–	–

23	22	21	20	19	18	17	16
–	–	–	–	PCS			

15	14	13	12	11	10	9	8
TD							

7	6	5	4	3	2	1	0
TD							

- **TD: Transmit Data (Code Label `SP_TD`)**

Data which is to be transmitted by the SPI Interface is stored in this register. Information to be transmitted must be written to the transmit data register in a right-justified format.

- **PCS: Peripheral Chip Select**

This field is only used if Variable Peripheral Select is active (PS = 1) and if the SPI is in Master Mode.

If PCSDEC = 0:

PCS = xxx0 NPCS[3:0] = 1110

PCS = xx01 NPCS[3:0] = 1101

PCS = x011 NPCS[3:0] = 1011

PCS = 0111 NPCS[3:0] = 0111

PCS = 1111 forbidden (no peripheral is selected)

(x = don’t care)

If PCSDEC = 1:

NPCS[3:0] output signals = PCS

19.12 SPI Status Register

Register Name: SP_SR

Access Type: Read-only

Offset: 0x10

Reset Value: 0x0

31	30	29	28	27	26	25	24
–	–	–	–	–	–	–	–
23	22	21	20	19	18	17	16
–	–	–	–	–	–	–	SPIENS
15	14	13	12	11	10	9	8
–	–	–	–	–	–	–	–
7	6	5	4	3	2	1	0
–	–	SPENDTX	SPENDRX	OVRES	MODF	TDRE	RDRF

- **RDRF: Receive Data Register Full (Code Label `SP_RDRF`)**

0 = No data has been received since the last read of SP_RDR

1= Data has been received and the received data has been transferred from the serializer to SP_RDR since the last read of SP_RDR.

- **TDRE: Transmit Data Register Empty (Code Label `SP_TDRE`)**

0 = Data has been written to SP_TDR and not yet transferred to the serializer.

1 = The last data written in the Transmit Data Register has been transferred in the serializer.

TDRE equals zero when the SPI is disabled or at reset. The SPI enable command sets this bit to one.

- **MODF: Mode Fault Error (Code Label `SP_MODF`)**

0 = No Mode Fault has been detected since the last read of SP_SR.

1 = A Mode Fault occurred since the last read of the SP_SR.

- **OVRES: Overrun Error Status (Code Label `SP_OVRES`)**

0 = No overrun has been detected since the last read of SP_SR.

1 = An overrun has occurred since the last read of SP_SR.

An overrun occurs when SP_RDR is loaded at least twice from the serializer since the last read of the SP_RDR.

- **SPENDRX: End of Receiver Transfer (Code Label `SP_SPENDRX`)**

0 = The End of Transfer signal from the Peripheral Data Controller channel dedicated to the receiver is inactive.

1 = The End of Transfer signal from the Peripheral Data Controller channel dedicated to the receiver is active.

- **SPENDTX: End of Transmitter Transfer (Code Label `SP_SPENDTX`)**

0 = The End of Transfer signal from the Peripheral Data Controller channel dedicated to the transmitter is inactive.

1 = The End of Transfer signal from the Peripheral Data Controller channel dedicated to the transmitter is active.

- **SPIENS: SPI Enable Status (Code Label `SP_SPIENS`)**

0 = SPI is disabled.

1 = SPI is enabled.

19.13 SPI Interrupt Enable Register

Register Name: SP_IER

Access Type: Write-only

Offset: 0x14

31	30	29	28	27	26	25	24
–	–	–	–	–	–	–	–
23	22	21	20	19	18	17	16
–	–	–	–	–	–	–	–
15	14	13	12	11	10	9	8
–	–	–	–	–	–	–	–
7	6	5	4	3	2	1	0
–	–	SPENDTX	SPENDRX	OVRES	MODF	TDRE	RDRF

- **RDRF: Receive Data Register Full Interrupt Enable (Code Label `SP_RDRF`)**

0 = No effect.

1 = Enables the Receiver Data Register Full Interrupt.

- **TDRE: SPI Transmit Data Register Empty Interrupt Enable (Code Label `SP_TDRE`)**

0 = No effect.

1 = Enables the Transmit Data Register Empty Interrupt.

- **MODF: Mode Fault Error Interrupt Enable (Code Label `SP_MODF`)**

0 = No effect.

1 = Enables the Mode Fault Interrupt.

- **OVRES: Overrun Error Interrupt Enable (Code Label `SP_OVRES`)**

0 = No effect.

1 = Enables the Overrun Error Interrupt.

- **SPENDRX: End of Receiver Transfer Interrupt Enable (Code Label `SP_SPENDRX`)**

0 = No effect.

1 = Enables the End of Receiver Transfer Interrupt.

- **SPENDTX: End of Transmitter Transfer Interrupt Enable (Code Label `SP_SPENDTX`)**

0 = No effect.

1 = Enables the End of Transmitter Transfer Interrupt.

19.14 SPI Interrupt Disable Register

Register Name: SP_IDR

Access Type: Write-only

Offset: 0x18

31	30	29	28	27	26	25	24
–	–	–	–	–	–	–	–
23	22	21	20	19	18	17	16
–	–	–	–	–	–	–	–
15	14	13	12	11	10	9	8
–	–	–	–	–	–	–	–
7	6	5	4	3	2	1	0
–	–	SPENDTX	SPENDRX	OVRES	MODF	TDRE	RDRF

- **RDRF: Receive Data Register Full Interrupt Disable (Code Label `SP_RDRF`)**

0 = No effect.

1 = Disables the Receiver Data Register Full Interrupt.

- **TDRE: Transmit Data Register Empty Interrupt Disable (Code Label `SP_TDRE`)**

0 = No effect.

1 = Disables the Transmit Data Register Empty Interrupt.

- **MODF: Mode Fault Interrupt Disable (Code Label `SP_MODF`)**

0 = No effect.

1 = Disables the Mode Fault Interrupt.

- **OVRES: Overrun Error Interrupt Disable (Code Label `SP_OVRES`)**

0 = No effect.

1 = Disables the Overrun Error Interrupt.

- **SPENDRX: End of Receiver Transfer Interrupt Disable (Code Label `SP_SPENDRX`)**

0 = No effect.

1 = Disables the End of Receiver Transfer Interrupt.

- **SPENDTX: End of Transmitter Transfer Interrupt Disable (Code Label `SP_SPENDTX`)**

0 = No effect.

1 = Disables the End of Transmitter Transfer Interrupt.

19.15 SPI Interrupt Mask Register

Register Name: SP_IMR

Access Type: Read-only

Offset: 0x1C

Reset Value: 0x0

31	30	29	28	27	26	25	24
–	–	–	–	–	–	–	–
23	22	21	20	19	18	17	16
–	–	–	–	–	–	–	–
15	14	13	12	11	10	9	8
–	–	–	–	–	–	–	–
7	6	5	4	3	2	1	0
–	–	SPENDTX	SPENDRX	OVRES	MODF	TDRE	RDRF

- **RDRF: Receive Data Register Full Interrupt Mask (Code Label `SP_RDRF`)**

0 = Receive Data Register Full Interrupt is disabled.

1 = Receive Data Register Full Interrupt is enabled.

- **TDRE: Transmit Data Register Empty Interrupt Mask (Code Label `SP_TDRE`)**

0 = Transmit Data Register Empty Interrupt is disabled.

1 = Transmit Data Register Empty Interrupt is enabled.

- **MODF: Mode Fault Interrupt Mask (Code Label `SP_MODF`)**

0 = Mode Fault Interrupt is disabled.

1 = Mode Fault Interrupt is enabled.

- **OVRES: Overrun Error Interrupt Mask (Code Label `SP_OVRES`)**

0 = Overrun Error Interrupt is disabled.

1 = Overrun Error Interrupt is enabled.

- **SPENDRX: End of Receiver Transfer Interrupt Mask (Code Label `SP_SPENDRX`)**

0 = End of Receiver Transfer Interrupt is disabled.

1 = End of Receiver Transfer Interrupt is enabled.

- **SPENDTX: End of Transmitter Transfer Interrupt Mask (Code Label `SP_SPENDTX`)**

0 = End of Transmitter Transfer Interrupt is disabled.

1 = End of Transmitter Transfer Interrupt is enabled.

19.16 SPI Receive Pointer Register

Name: SP_RPR

Access Type: Read/Write

Offset: 0x20

Reset Value: 0x0

31	30	29	28	27	26	25	24
RXPTR							
23	22	21	20	19	18	17	16
RXPTR							
15	14	13	12	11	10	9	8
RXPTR							
7	6	5	4	3	2	1	0
RXPTR							

- **RXPTR: Receive Pointer**

RXPTR must be loaded with the address of the receive buffer.

19.17 SPI Receive Counter Register

Name: SP_RCR

Access Type: Read/Write

Offset: 0x24

Reset Value: 0x0

31	30	29	28	27	26	25	24
–	–	–	–	–	–	–	–
23	22	21	20	19	18	17	16
–	–	–	–	–	–	–	–
15	14	13	12	11	10	9	8
RXCTR							
7	6	5	4	3	2	1	0
RXCTR							

- **RXCTR: Receive Counter**

RXCTR must be loaded with the size of the receive buffer.

0: Stop Peripheral Data Transfer dedicated to the receiver.

1-65535: Start Peripheral Data transfer if RDRF is active.

19.18 SPI Transmit Pointer Register

Name: SP_TPR

Access Type: Read/Write

Offset: 0x28

Reset Value: 0x0

31	30	29	28	27	26	25	24
TXPTR							
23	22	21	20	19	18	17	16
TXPTR							
15	14	13	12	11	10	9	8
TXPTR							
7	6	5	4	3	2	1	0
TXPTR							

- **TXPTR: Transmit Pointer**

TXPTR must be loaded with the address of the transmit buffer.

19.19 SPI Transmit Counter Register

Name: SP_TCR

Access Type: Read/Write

Offset: 0x2C

Reset Value: 0x0

31	30	29	28	27	26	25	24
–	–	–	–	–	–	–	–
23	22	21	20	19	18	17	16
–	–	–	–	–	–	–	–
15	14	13	12	11	10	9	8
TXCTR							
7	6	5	4	3	2	1	0
TXCTR							

- **TXCTR: Transmit Counter**

TXCTR must be loaded with the size of the transmit buffer.

0: Stop Peripheral Data Transfer dedicated to the transmitter.

1-65535: Start Peripheral Data transfer if TDRE is active.

19.20 SPI Chip Select Register

Register Name: SP_CSR0..SP_CSR3

Access Type: Read/Write

Reset Value: 0x0

31	30	29	28	27	26	25	24
DLYBCT							
23	22	21	20	19	18	17	16
DLYBS							
15	14	13	12	11	10	9	8
SCBR							
7	6	5	4	3	2	1	0
BITS				–	–	NCPHA	CPOL

- **CPOL: Clock Polarity (Code Label `SP_CPOL`)**

0 = The inactive state value of SPCK is logic level zero.

1 = The inactive state value of SPCK is logic level one.

CPOL is used to determine the inactive state value of the serial clock (SPCK). It is used with NCPHA to produce a desired clock/data relationship between master and slave devices.

- **NCPHA: Clock Phase (Code Label `SP_NCPHA`)**

0 = Data is changed on the leading edge of SPCK and captured on the following edge of SPCK.

1 = Data is captured on the leading edge of SPCK and changed on the following edge of SPCK.

NCPHA determines which edge of SPCK causes data to change and which edge causes data to be captured. NCPHA is used with CPOL to produce a desired clock/data relationship between master and slave devices.

- **BITS: Bits Per Transfer**

The BITS field determines the number of data bits transferred. Reserved values should not be used.

BITS[3:0]	Bits Per Transfer	Code Label: `SP_BITS`
0000	8	SP_BITS_8
0001	9	SP_BITS_9
0010	10	SP_BITS_10
0011	11	SP_BITS_11
0100	12	SP_BITS_12
0101	13	SP_BITS_13
0110	14	SP_BITS_14
0111	15	SP_BITS_15
1000	16	SP_BITS_16
1001	Reserved	–
1010	Reserved	–
1011	Reserved	–
1100	Reserved	–
1101	Reserved	–
1110	Reserved	–
1111	Reserved	–

- **SCBR: Serial Clock Baud Rate (Code Label `SP_SCBR`)**

In Master Mode, the SPI Interface uses a modulus counter to derive the SPCK baud rate from the SPI Master Clock (selected between MCK and MCK/32). The baud rate is selected by writing a value from 2 to 255 in the field SCBR. The following equation determines the SPCK baud rate:

$$\text{SPCK_Baud_Rate} = \frac{\text{SPI_Master_Clock_frequency}}{2 \times \text{SCBR}}$$

Giving SCBR a value of zero or one disables the baud rate generator. SPCK is disabled and assumes its inactive state value. No serial transfers may occur. At reset, baud rate is disabled.

- **DLYBS: Delay Before SPCK (Code Label `SP_DLYBS`)**

This field defines the delay from NPCS valid to the first valid SPCK transition.

When DLYBS equals zero, the NPCS valid to SPCK transition is 1/2 the SPCK clock period.

Otherwise, the following equation determines the delay:

NPCS_to_SPCK_Delay = DLYBS • SPI_Master_Clock_period

- **DLYBCT: Delay Between Consecutive Transfers (Code Label `SP_DLYBCT`)**

This field defines the delay between two consecutive transfers with the same peripheral without removing the chip select. The delay is always inserted after each transfer and before removing the chip select if needed.

When DLYBCT equals zero, a delay of four SPI Master Clock periods are inserted.

Otherwise, the following equation determines the delay:

Delay_After_Transfer = 32 • DLYBCT • SPI_Master_Clock_period

20. JTAG Boundary-scan Register

The Boundary-scan Register (BSR) contains 237 bits which correspond to active pins and associated control signals.

Each AT91M42800A input pin has a corresponding bit in the Boundary-scan Register for observability.

Each AT91M42800A output pin has a corresponding 2-bit register in the BSR. The OUTPUT bit contains data that can be forced on the pad. The CTRL bit can put the pad into high impedance.

Each AT91M42800A in/out pin corresponds to a 3-bit register in the BSR. The OUTPUT bit contains data that can be forced on the pad. The INPUT bit is for the observability of data applied to the pad. The CTRL bit selects the direction of the pad.

Table 20-1. Boundary-scan Register

Bit Number	Pin Name	Pin Type	Associated BSR Cells
237	PA25/MCKO	IN/OUT	OUTPUT
236			INPUT
235			CTRL
234	PA24/NPCSB3	IN/OUT	OUTPUT
233			INPUT
232			CTRL
231	PA23/NPCSB2	IN/OUT	OUTPUT
230			INPUT
229			CTRL
228	PA22/NPCSB1	IN/OUT	OUTPUT
227			INPUT
226			CTRL
225	PA21/NPCSB0/ NSSB	IN/OUT	OUTPUT
224			INPUT
223			CTRL
222	PA20/MOSIB	IN/OUT	OUTPUT
221			INPUT
220			CTRL
219	PA19/MISOB	IN/OUT	OUTPUT
218			INPUT
217			CTRL
216	PA18/SPCKB	IN/OUT	OUTPUT
215			INPUT
214			CTRL
210	PA16/NPCSA2	IN/OUT	OUTPUT
209			INPUT
208			CTRL
207	PA15/NPCSA1	IN/OUT	OUTPUT
206			INPUT
205			CTRL
204	PA14/NPCSA0/ NSSA	IN/OUT	OUTPUT
203			INPUT
202			CTRL
201	PA13/MOSIA	IN/OUT	OUTPUT
200			INPUT
199			CTRL
198	PA12/MISOA	IN/OUT	OUTPUT
197			INPUT
196			CTRL
195	PA11/SPCKA	IN/OUT	OUTPUT
194			INPUT
193			CTRL
192	PA10/RXD1	IN/OUT	OUTPUT
191			INPUT
190			CTRL
189	PA9/TXD1/NTRI	IN/OUT	OUTPUT
188			INPUT
187			CTRL

Table 20-1. Boundary-scan Register (Continued)

Bit Number	Pin Name	Pin Type	Associated BSR Cells
213	PA17/NPCSA3	IN/OUT	OUTPUT
212			INPUT
211			CTRL
183	PA7/RXD0	IN/OUT	OUTPUT
182			INPUT
181			CTRL
180	PA6/TXD0	IN/OUT	OUTPUT
179			INPUT
178			CTRL
177	PA5/SCK0	IN/OUT	OUTPUT
176			INPUT
175			CTRL
174	PA4/FIQ	IN/OUT	OUTPUT
173			INPUT
172			CTRL
171	PA3/IRQ3	IN/OUT	OUTPUT
170			INPUT
169			CTRL
168	PA2/IRQ2	IN/OUT	OUTPUT
167			INPUT
166			CTRL
165	PA1/IRQ1	IN/OUT	OUTPUT
164			INPUT
163			CTRL
162	PA0/IRQ0	IN/OUT	OUTPUT
161			INPUT
160			CTRL
159	PB23/TIOB5	IN/OUT	OUTPUT
158			INPUT
157			CTRL
156	PB22/TIOA5	IN/OUT	OUTPUT
155			INPUT
154			CTRL
186	PA8/SCK1	IN/OUT	OUTPUT
185			INPUT
184			CTRL
150	PB20/TIOB4	IN/OUT	OUTPUT
149			INPUT
148			CTRL
147	PB19/TIOA4	IN/OUT	OUTPUT
146			INPUT
145			CTRL
144	PB18/TCLK4	IN/OUT	OUTPUT
143			INPUT
142			CTRL
141	PB17/TIOB3	IN/OUT	OUTPUT
140			INPUT
139			CTRL
138	PB16/TIOA3	IN/OUT	OUTPUT
137			INPUT
136			CTRL
135	PB15/TCLK3	IN/OUT	OUTPUT
134			INPUT
133			CTRL
132	PB14/TIOB2	IN/OUT	OUTPUT
131			INPUT
130			CTRL
129	PB13/TIOA2	IN/OUT	OUTPUT
128			INPUT
127			CTRL
126	PB12/TCLK2	IN/OUT	OUTPUT
125			INPUT
124			CTRL
123	PB11/TIOB1	IN/OUT	OUTPUT
122			INPUT
121			CTRL

Table 20-1. Boundary-scan Register (Continued)

Bit Number	Pin Name	Pin Type	Associated BSR Cells
153	PB21/TCLK5	IN/OUT	OUTPUT
152			INPUT
151			CTRL
117	PB9/TCLK1	IN/OUT	OUTPUT
116			INPUT
115			CTRL
114	PB8/TIOB0	IN/OUT	OUTPUT
113			INPUT
112			CTRL
111	PB7/TIOA0	IN/OUT	OUTPUT
110			INPUT
109			CTRL
108	PB6/TCLK0	IN/OUT	OUTPUT
107			INPUT
106			CTRL
105	D15	IN/OUT	OUTPUT
104			INPUT
103	D14	IN/OUT	OUTPUT
102			INPUT
101	D13	IN/OUT	OUTPUT
100			INPUT
99	D12	IN/OUT	OUTPUT
98			INPUT
97	D[15:12]	IN/OUT	CTRL
96	D11	IN/OUT	OUTPUT
95			INPUT
94	D10	IN/OUT	OUTPUT
93			INPUT
92	D9	IN/OUT	OUTPUT
91			INPUT
90	D8	IN/OUT	OUTPUT
89			INPUT
88	D[11:8]	IN/OUT	CTRL
87	D7	IN/OUT	OUTPUT
86			INPUT
120	PB10/TIOA1	IN/OUT	OUTPUT
119			INPUT
118			CTRL
82	D5	IN/OUT	INPUT
81	D4	IN/OUT	OUTPUT
80			INPUT
79	D[7:4]	IN/OUT	CTRL
78	D3	IN/OUT	OUTPUT
77			INPUT
76	D2	IN/OUT	OUTPUT
75			INPUT
74	D1	IN/OUT	OUTPUT
73			INPUT
72	D0	IN/OUT	OUTPUT
71			INPUT
70	D[3:0]	IN/OUT	CTRL
69	PB5/A23/CS4	IN/OUT	OUTPUT
68			INPUT
67			CTRL
66	PB4/A22/CS5	IN/OUT	OUTPUT
65			INPUT
64			CTRL
63	PB3/A21/CS6	IN/OUT	OUTPUT
62			INPUT
61			CTRL
60	PB2/A20/CS7	IN/OUT	OUTPUT
59			INPUT
58			CTRL
57	A19	OUTPUT	OUTPUT
56	A18	OUTPUT	OUTPUT
55	A17	OUTPUT	OUTPUT
54	A16	OUTPUT	OUTPUT
53	A[19:16]	OUTPUT	CTRL
52	A15	OUTPUT	OUTPUT
51	A14	OUTPUT	OUTPUT

Table 20-1. Boundary-scan Register (Continued)

Bit Number	Pin Name	Pin Type	Associated BSR Cells
85	D6	IN/OUT	OUTPUT
84			INPUT
83	D5	IN/OUT	OUTPUT
47	A11	OUTPUT	OUTPUT
46	A10	OUTPUT	OUTPUT
45	A9	OUTPUT	OUTPUT
44	A8	OUTPUT	OUTPUT
43	A[11:8]	OUTPUT	CTRL
42	A7	OUTPUT	OUTPUT
41	A6	OUTPUT	OUTPUT
40	A5	OUTPUT	OUTPUT
39	A4	OUTPUT	OUTPUT
38	A[7:4]	OUTPUT	CTRL
37	A3	OUTPUT	OUTPUT
36	A2	OUTPUT	OUTPUT
35	A1	OUTPUT	OUTPUT
34	NLB/A0	OUTPUT	OUTPUT
33	A[3:0]	OUTPUT	CTRL
32	PB1/NCS3	IN/OUT	OUTPUT
31			INPUT
30			CTRL
29	PB0/NCS2	IN/OUT	OUTPUT
28			INPUT
27			CTRL
26	NCS1	OUTPUT	OUTPUT
25	NCS0	IN/OUT	OUTPUT
24			CTRL
23	NUB/NWR1	IN/OUT	OUTPUT
22			INPUT

Bit Number	Pin Name	Pin Type	Associated BSR Cells
50	A13	OUTPUT	OUTPUT
49	A12	OUTPUT	OUTPUT
48	A[15:12]	OUTPUT	CTRL
21	NWE/NWR0	IN/OUT	OUTPUT
20			INPUT
19	NOE/NRD	IN/OUT	OUTPUT
18			INPUT
17	NOE/NRD NEW/NWR0 NUB/NWR1 NCS1	IN/OUT	CTRL
16	NWAIT	INPUT	INPUT
15	PA29/PME	IN/OUT	OUTPUT
14			INPUT
13			CTRL
12	PA28	IN/OUT	OUTPUT
11			INPUT
10			CTRL
9	NRST	INPUT	INPUT
8	PA27/BMS	IN/OUT	OUTPUT
7			INPUT
6			CTRL
5	NWDOVF	OUTPUT	OUTPUT
5	NWDOVF	OUTPUT	OUTPUT
4			CTRL
3	PA26	IN/OUT	OUTPUT
2			INPUT
1			CTRL

21. Packaging Information

Figure 21-1. 144-lead LQFP Package Drawing

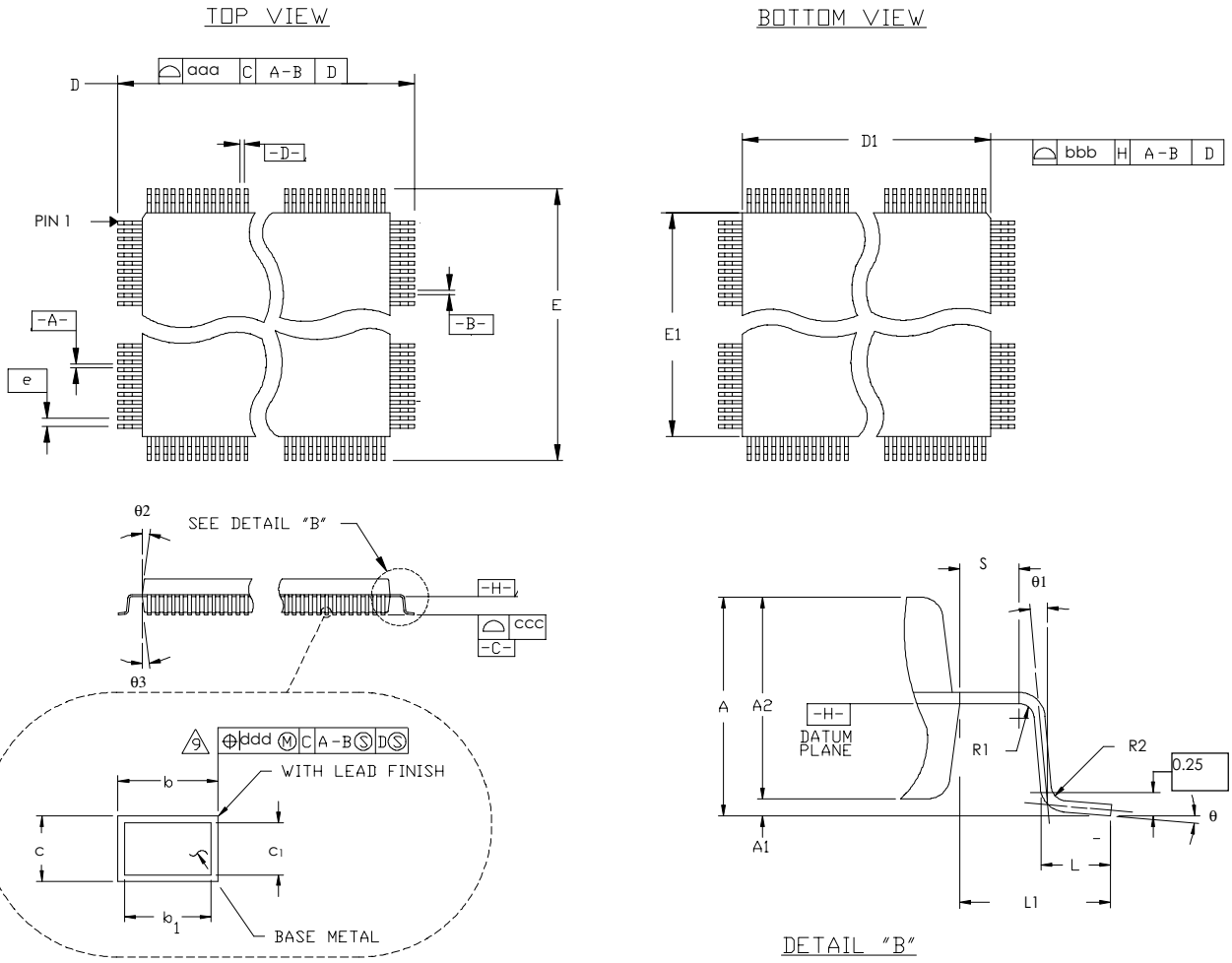

Table 21-1. Common Dimensions (mm)

Symbol	Min	Nom	Max
c	0.09		0.2
c1	0.09		0.16
L	0.45	0.6	0.75
L1		1.00 REF	
R2	0.08		0.2
R1	0.08		
S	0.2		
q	0°	3.5°	7°
q1	0°		
q2	11°	12°	13°
q3	11°	12°	13°
A			1.6
A1	0.05		0.15
A2	1.35	1.4	1.45
Tolerances and form of position			
aaa		0.2	
bbb		0.2	

Table 21-2. Lead Count Dimensions (mm)

Pin Count	D/E BSC	D1/E1 BSC	b			b1			e BSC	ccc	ddd
			Min	Nom	Max	Min	Nom	Max			
144	22.0	20.0	0.17	0.22	0.27	0.17	0.2	0.23	0.50	0.10	0.08

Table 21-3. Device and 144-lead LQFP Package Maximum Weight

1708	mg

Figure 21-2. 144-ball Ball Grid Array Package Drawing

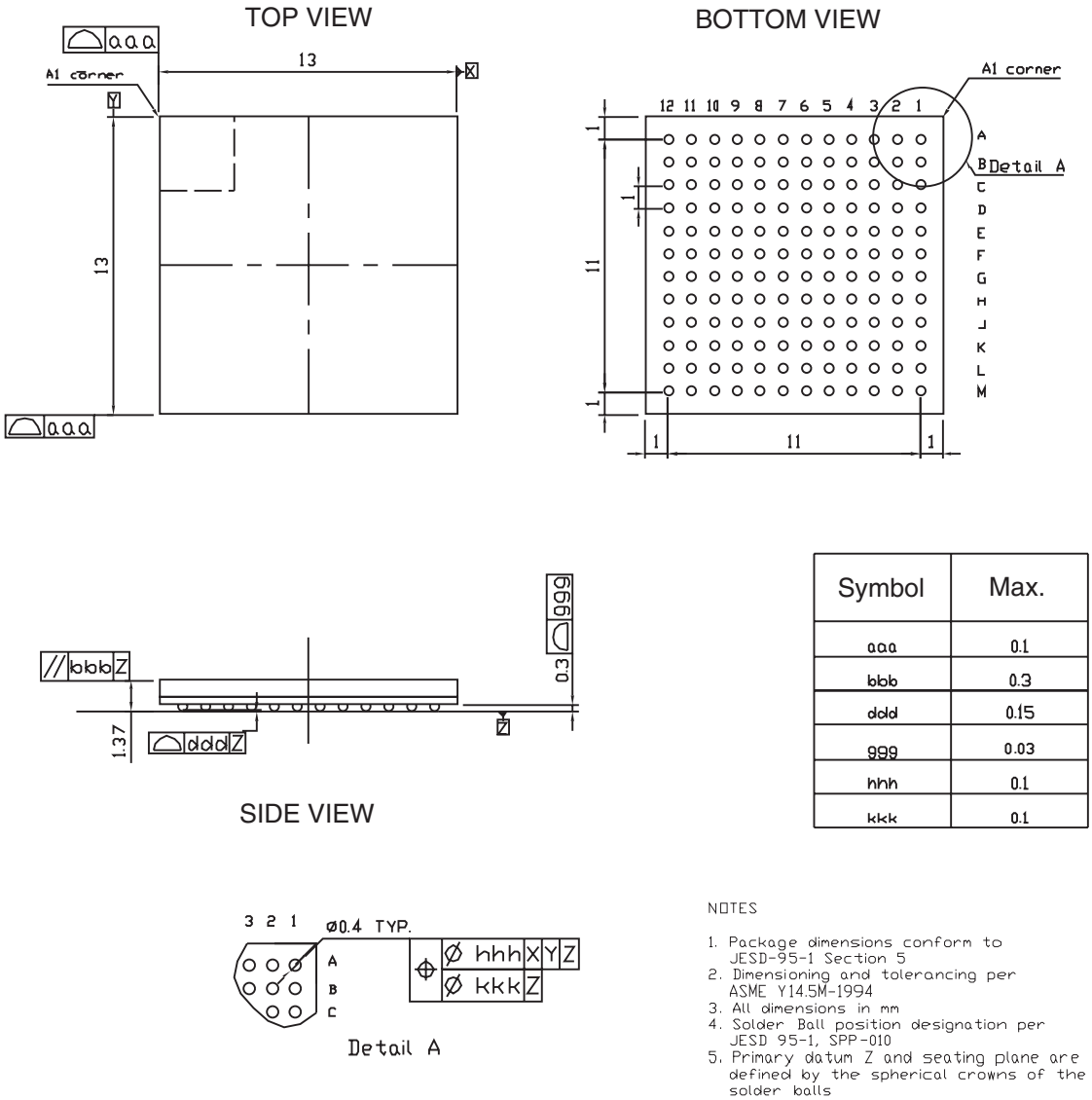

Symbol	Max.
aaa	0.1
bbb	0.3
ddd	0.15
eee	0.03
fff	0.1
ggg	0.1

Table 21-4. Device and 144-ball BGA Package Maximum Weight

584	mg

22. Soldering Profile

22.1 LQFP Soldering Profile (Green)

Table 22-1 gives the recommended soldering profile from J-STD-020C.

Table 22-1. Soldering Profile Green Compliant Package

Profile Feature	Green Package
Average Ramp-up Rate (217°C to Peak)	3° C/sec. max.
Preheat Temperature 175°C ±25°C	180 sec. max.
Temperature Maintained Above 217°C	60 sec. to 150 sec.
Time within 5° C of Actual Peak Temperature	20 sec. to 40 sec.
Peak Temperature Range	260° C
Ramp-down Rate	6° C/sec. max.
Time 25° C to Peak Temperature	8 min. max.

Note: The package is certified to be backward compatible with Pb/Sn soldering profile.

A maximum of three reflow passes is allowed per component.

22.2 BGA Soldering Profile (RoHS-compliant)

Table 22-2 gives the recommended soldering profile from J-STD-20C.

Table 22-2. Soldering Profile RoHS Compliant Package

Profile Feature	Convection or IR/Convection
Average Ramp-up Rate (183° C to Peak)	3° C/sec. max.
Preheat Temperature 125° C ±25° C	180 sec. max
Temperature Maintained Above 183° C	60 sec. to 150 sec.
Time within 5° C of Actual Peak Temperature	20 sec. to 40 sec.
Peak Temperature Range	260° C
Ramp-down Rate	6° C/sec.
Time 25° C to Peak Temperature	8 min. max

Note: It is recomended to apply a soldering temperature higher than 250°C.

A maximum of three reflow passes is allowed per component.

23. Ordering Information

Table 23-1. Ordering Information

Ordering Code	Package	Package Type	Operating Temperature Range
AT91M42800A-33CJ	BGA 144	RoHS-compliant	Industrial (-40° C to 85° C)
AT91M42800A-33AU	LQFP 144	Green	

24. AT91M42800A Errata

These errata are applicable to:

- 144-lead TQFP and 144-ball BGA devices with the following markings:

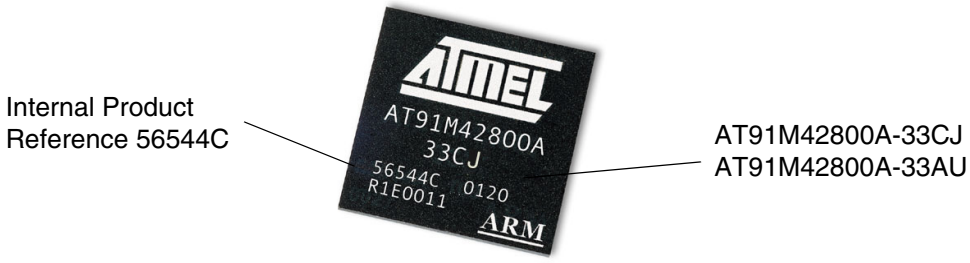

24.1 Warning: Additional NWAIT Constraints

When the NWAIT signal is asserted during an external memory access, the following EBI behavior is correct:

- NWAIT is asserted before the first rising edge of the master clock and respects the NWAIT to MCKI rising setup timing as defined in the Electrical Characteristics datasheet.
- NWAIT is sampled inactive and at least one standard wait state remains to be executed, even if NWAIT does not meet the NWAIT to first MCKI rising setup timing (i.e., NWAIT is asserted only on the second rising edge of MCKI).

In these cases, the access is delayed as required by NWAIT and the access operations are correctly performed.

In other cases, the following erroneous behavior occurs:

- 32-bit read accesses are not managed correctly and the first 16-bit data sampling takes into account only the standard wait states. 16- and 8-bit accesses are not affected.
- During write accesses of any type, the NWE rises on the rising edge of the last cycle as defined by the programmed number of wait states. However, NWAIT assertion does affect the length of the total access. Only the NWE pulse length is inaccurate.

At maximum speed, asserting the NWAIT in the first access cycle is not possible, as the sum of the timings “MCKI Falling to Chip Select” and “NWAIT setup to MCKI rising” are generally higher than one half of a clock period. This leads to using at least one standard wait state. However, this is not sufficient except to perform byte or half-word read accesses. Word and write accesses require at least two standard wait states.

The following waveforms further explain the issue:

If the NWAIT setup time is satisfied on the first rising edge of MCKI, the behavior is accurate. The EBI operations are not affected when the NWAIT rises.

Figure 24-1. NWAIT Rising

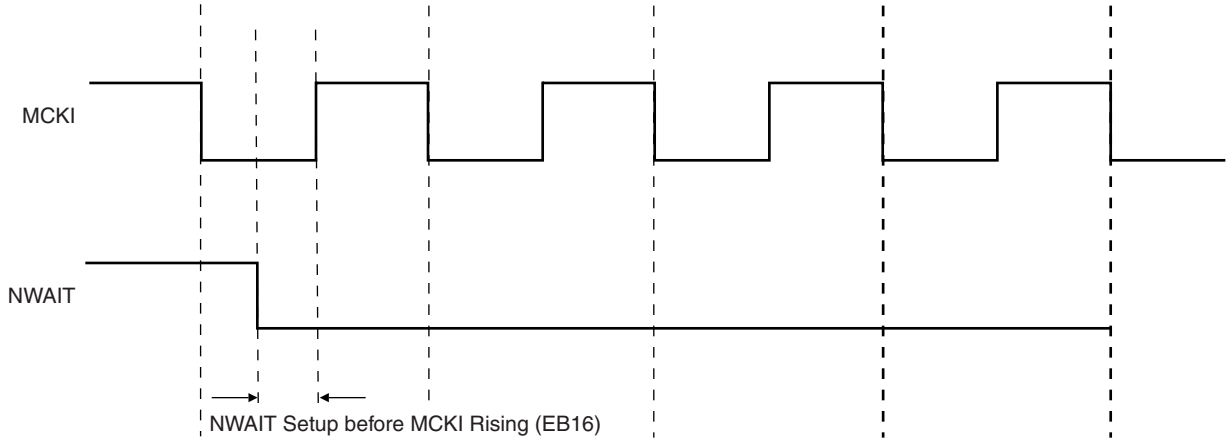

If the NWAIT setup time is satisfied on the following edges of MCKI and if at least one standard wait state remains to be executed, the behavior is accurate. In the following example, the number of standard wait states is two. The NWAIT setup time on the second rising edge of MCKI must be met.

Figure 24-2. Number of Standard Wait States is Two

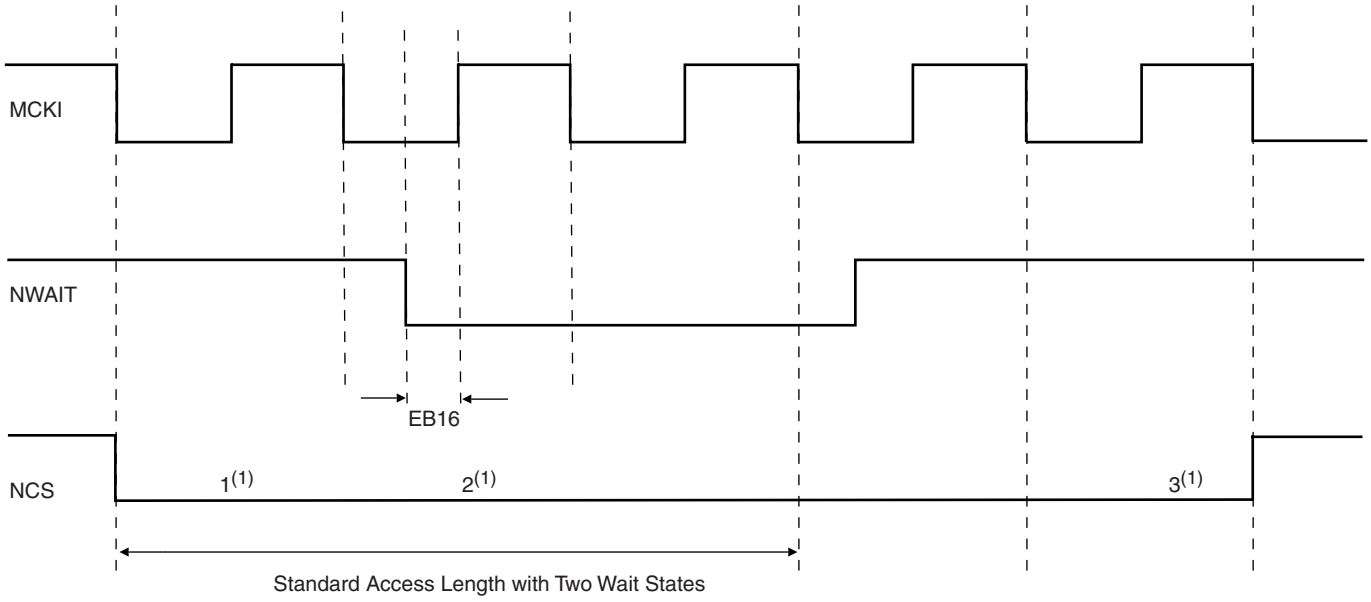

Note: 1. These numbers refer to the standard access cycles.

If the first two conditions are not met during a 32-bit read access, the first 16-bit data is read at the end of the standard 16-bit read access. In the following example, the number of standard waits is one. NWAIT assertions do affect both NRD pulse lengths, but first data sampling is not delayed. The second data sampling is correct.

Figure 24-3. Number of Standard Wait States is One

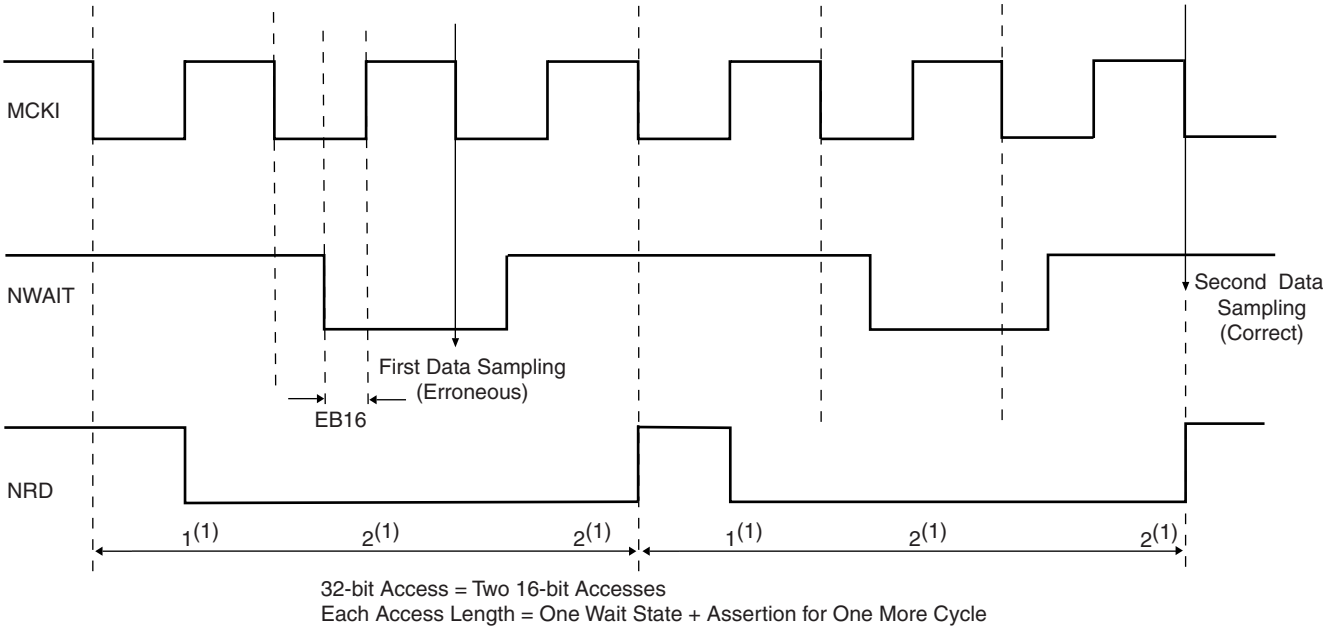

Note: 1. These numbers refer to the standard access cycles.

If the first two conditions are not met during write accesses, the NWE signal is not affected by the NWAIT assertion. The following example illustrates the number of standard wait states. NWAIT is not asserted during the first cycle, but is asserted at the second and last cycle of the standard access. The access is correctly delayed as the NCS line rises accordingly to the NWAIT assertion. However, the NWE signal waveform is unchanged, and rises too early.

Figure 24-4. Description of the Number of Standard Wait States

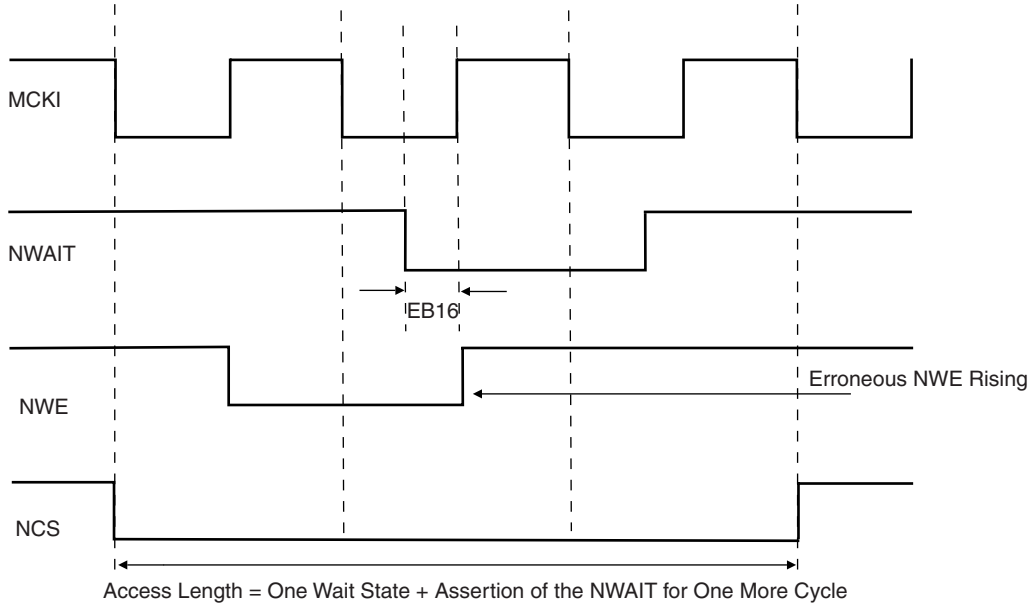

24.2 Possible Glitches on MCKO while Commuting Clock

Unpredictable transitional pulses may occur on the MCKO pin when modifying the MCKOSS field in the PMC Clock Generator Mode Register. The length of these glitches can be lower than the lowest period of the selected or current clock. When switching from the Slow Clock (i.e., after reset) to any of the PLL outputs (inverted or divided by 2), a pulse of less than 10 ns is output on the pin MCKO.

Problem Fix/Workaround

The glitch description above is merely a user warning/possibility. If the glitches do occur, there is no Problem Fix/Workaround to propose.

24.3 Initializing SPI in Master Mode May Cause Problems

Initializing the SPI in master mode may cause a mode fault detection.

Problem Fix/Workaround

In order to prevent this error, the user should pull up the PA14/NPCSA0/NSSA pin for SPIA or the PA21/NPCSA0/NSSB pin for SPIB to the V_{DDIO} power supply.

24.4 Break is Sent before Last Written Character

When the Start Break command is activated in the USART Control Register and while a character is in the USART Transmit Holding Register, the break is transmitted before the character.

Problem Fix/Workaround

The user must wait for the TXEMPTY flag in the USART Status Register before sending a break command.

24.5 End of Break is not Guaranteed

When performing a Stop Break command, the USART transmitter normally inserts a “12-bit at level 1” sequence after the break. This feature is not guaranteed.

Problem Fix/Workaround

The user must use the Time Guard programmed at the value 12.

24.6 SCK is Ignored at 32 kHz

If the origin of the Master Clock is the Slow Clock, the USART Channels cannot be synchronized with a clock that comes from the SCK pin.

Problem Fix/Workaround

No problem fix/workaround to propose.

24.7 SCK Maximum Frequency Relative to MCK in Synchronous Mode

In USART Synchronous Mode, the external clock frequency (SCK) must be at least 10 times lower than the Master Clock.

Problem Fix/Workaround

No problem fix/workaround to propose.

24.8 PIO Input Filters are not Bit-to-bit Selectable

The PIO input filters are enabled and disabled only for all of the PIO input pins and not individually. To activate them, the user must write 0x0001 in the PIO IFER and 0x0001 in the PIO IFDR to deactivate them.

Problem Fix/Workaround

No problem fix/workaround to propose.

24.9 PIO Multi-drive Capability not Usable

The PIO multi-drive capability does not work in PIO mode or in peripheral mode.

Problem Fix/Workaround

No practical workaround proposed.

25. Revision History

Table 25-1. Revision History

1779A	First Issue. Publication Date: Oct-01	
1779B	Publication Date: 22-Mar-02	
	Change in Table 2 on page 4	
	Change in Table 3 on page 5	
	Change in Table 4 on page 10	
	Change in section Power SupplyChange in section Clock Generator on page 11	
	Added section Protection ModeChange in section Internal MemoriesDeleted section Protect Mode on page 13	
1779C	Added Section 7.5.2 ”NTRST Pin” on page 13.	05-473
	Changed number of wait states in Section 11.8 ”Boot on NCS0” on page 29. Change in reset state for EBI_CSR0 in Table 11-4 on page 48.	03-245
	Added Section 21. ”Packaging Information” on page 205, Section 22. ”Soldering Profile” on page 208 and Section 23. ”Ordering Information” on page 209.	
	Added Section 24. ”AT91M42800A Errata” on page 210 to replace Lit. No. 1782, AT91M42800A Errata Sheet.	
1779D	Updated Section 22. ”Soldering Profile” on page 208 and Section 23. ”Ordering Information” on page 209 to remove leaded packages.	2600

Table of Contents

Features *1*

1 Description *2*

2 Pin Configuration *3*

3 Pin Description *6*

4 Block Diagram *8*

5 Architectural Overview *9*

5.1 Memories 9

5.2 Peripherals 9

6 Associated Documentation *11*

7 Product Overview *11*

7.1 Power Supply 11

7.2 Input/Output Considerations 11

7.3 Operating Modes 12

7.4 Clock Generator 12

7.5 Reset 12

7.6 Emulation Functions 13

7.7 Memory Controller 14

7.8 External Bus Interface 16

8 Peripherals *16*

8.1 System Peripherals 17

8.2 User Peripherals 18

9 Memory Map *20*

10 Peripheral Memory Map *22*

11 EBI: External Bus Interface *23*

11.1 External Memory Mapping 23

11.2 Abort Status 24

11.3 EBI Behavior During Internal Accesses 24

11.4 Pin Description 25

11.5 Chip Select Lines 25

11.6 Data Bus Width 26

11.7 Byte Write or Byte Select Access 27

11.8 Boot on NCS0 29
11.9 Read Protocols 29
11.10 Write Data Hold Time 31
11.11 Wait States 32
11.12 Memory Access Waveforms 36
11.13 EBI User Interface 48
11.14 EBI Chip Select Register 49
11.15 EBI Remap Control Register 51
11.16 EBI Memory Control Register 52
11.17 Abort Status Register 53
11.18 Abort Address Status Register 54

12 PMC: Power Management Controller 55

12.1 Oscillator and Slow Clock 55
12.2 Master Clock 56
12.3 Master Clock Output Controller 58
12.4 ARM Processor Clock Controller 59
12.5 Peripheral Clock Controller 59
12.6 PMC User Interface 61
12.7 PMC System Clock Enable Register 62
12.8 PMC System Clock Disable Register 63
12.9 PMC System Clock Status Register 63
12.10 PMC Peripheral Clock Enable Register 64
12.11 PMC Peripheral Clock Disable Register 64
12.12 PMC Peripheral Clock Status Register 65
12.13 PMC Clock Generator Mode Register 66
12.14 PMC Status Register 68
12.15 PMC Interrupt Enable Register 69
12.16 PMC Interrupt Disable Register 69
12.17 PMC Interrupt Mask Register 70

13 ST: System Timer 71

13.1 PIT: Period Interval Timer 71
13.2 WDT: Watchdog Timer 71
13.3 RTT: Real-time Timer 72
13.4 System Timer User Interface 74
13.5 System Timer Control Register 74

13.6 System Timer Period Interval Mode Register 75
13.7 System Timer Watchdog Mode Register 75
13.8 System Timer Real-time Mode Register 76
13.9 System Timer Status Register 76
13.10 System Timer Interrupt Enable Register 77
13.11 System Timer Interrupt Disable Register 78
13.12 System Timer Interrupt Mask Register 79
13.13 System Timer Real-time Alarm Register 80
13.14 System Timer Current Real-time Register 80

14 AIC: Advanced Interrupt Controller 81

14.1 Hardware Interrupt Vectoring 82
14.2 Priority Controller 83
14.3 Interrupt Handling 83
14.4 Interrupt Masking 83
14.5 Interrupt Clearing and Setting 84
14.6 Fast Interrupt Request 84
14.7 Software Interrupt 84
14.8 Spurious Interrupt 84
14.9 Protect Mode 85
14.10 AIC User Interface 86
14.11 AIC Source Mode Register 87
14.12 AIC Source Vector Register 88
14.13 AIC Interrupt Vector Register 88
14.14 AIC FIQ Vector Register 89
14.15 AIC Interrupt Status Register 89
14.16 AIC Interrupt Pending Register 90
14.17 AIC Interrupt Mask Register 90
14.18 AIC Core Interrupt Status Register 91
14.19 AIC Interrupt Enable Command Register 92
14.20 AIC Interrupt Disable Command Register 92
14.21 AIC Interrupt Clear Command Register 93
14.22 AIC Interrupt Set Command Register 93
14.23 AIC End of Interrupt Command Register 94
14.24 AIC Spurious Vector Register 94
14.25 Standard Interrupt Sequence 95
14.26 Fast Interrupt Sequence 96

15 PIO: Parallel I/O Controller 97
15.1 Multiplexed I/O Lines 97
15.2 Output Selection 97
15.3 I/O Levels 97
15.4 Filters 97
15.5 Interrupts 98
15.6 User Interface 98
15.7 Multi-driver (Open Drain) 98
15.8 PIO Connection Tables 100
15.9 PIO Enable Register 103
15.10 PIO Disable Register 103
15.11 PIO Status Register 104
15.12 PIO Output Enable Register 105
15.13 PIO Output Disable Register 105
15.14 PIO Output Status Register 106
15.15 PIO Input Filter Enable Register 107
15.16 PIO Input Filter Disable Register 107
15.17 PIO Input Filter Status Register 108
15.18 PIO Set Output Data Register 109
15.19 PIO Clear Output Data Register 109
15.20 PIO Output Data Status Register 110
15.21 PIO Pin Data Status Register 110
15.22 PIO Interrupt Enable Register 111
15.23 PIO Interrupt Disable Register 111
15.24 PIO Interrupt Mask Register 112
15.25 PIO Interrupt Status Register 112
15.26 PIO Multi-drive Enable Register 113
15.27 PIO Multi-drive Disable Register 113
15.28 PIO Multi-drive Status Register 114
16 SF: Special Function Registers 115
16.1 Chip Identification 115
16.2 Chip ID Register 116
16.3 Chip ID Extension Register 118
16.4 Reset Status Register 118
16.5 SF Protect Mode Register 119

17 USART: Universal Synchronous/Asynchronous Receiver/Transmitter 121

17.1 Pin Description 122
17.2 Baud Rate Generator 122
17.3 Receiver 123
17.4 Transmitter 125
17.5 Multi-drop Mode 125
17.6 Break 126
17.7 Peripheral Data Controller 127
17.8 Interrupt Generation 127
17.9 Channel Modes 127
17.10 USART User Interface 129
17.11 USART Control Register 130
17.12 USART Mode Register 132
17.13 USART Interrupt Enable Register 135
17.14 USART Interrupt Disable Register 137
17.15 USART Interrupt Mask Register 139
17.16 USART Channel Status Register 141
17.17 USART Receiver Holding Register 143
17.18 USART Transmitter Holding Register 143
17.19 USART Baud Rate Generator Register 144
17.20 USART Receiver Time-out Register 145
17.21 USART Transmitter Time-guard Register 146
17.22 USART Receive Pointer Register 147
17.23 USART Receive Counter Register 147
17.24 USART Transmit Pointer Register 148
17.25 USART Transmit Counter Register 148

18 TC: Timer/Counter 149

18.1 Signal Name Description(1, 2) 151
18.2 Timer/Counter Description 152
18.3 Capture Operating Mode 155
18.4 Waveform Operating Mode 157
18.5 TC User Interface 160
18.6 TC Block Control Register 161
18.7 TC Block Mode Register 162
18.8 TC Channel Control Register 163

18.9 TC Channel Mode Register: Capture Mode 164
18.10 TC Channel Mode Register: Waveform Mode 166
18.11 TC Counter Value Register 170
18.12 TC Register A 171
18.13 TC Register B 171
18.14 TC Register C 172
18.15 TC Status Register 173
18.16 TC Interrupt Enable Register 175
18.17 TC Interrupt Disable Register 177
18.18 TC Interrupt Mask Register 178

19 SPI: Serial Peripheral Interface 179

19.1 Pin Description 179
19.2 Master Mode 180
19.3 Slave Mode 184
19.4 Data Transfer 185
19.5 Clock Generation 186
19.6 Peripheral Data Controller 186
19.7 SPI Programmer's Model 187
19.8 SPI Control Register 188
19.9 SPI Mode Register 189
19.10 SPI Receive Data Register 191
19.11 SPI Transmit Data Register 192
19.12 SPI Status Register 193
19.13 SPI Interrupt Enable Register 194
19.14 SPI Interrupt Disable Register 195
19.15 SPI Interrupt Mask Register 196
19.16 SPI Receive Pointer Register 197
19.17 SPI Receive Counter Register 197
19.18 SPI Transmit Pointer Register 198
19.19 SPI Transmit Counter Register 198
19.20 SPI Chip Select Register 199

20 JTAG Boundary-scan Register 201

21 Packaging Information 205

22 Soldering Profile 208

22.1 Green Soldering Profile 208

22.2 RoHS Soldering Profile 208

23 Ordering Information 209

24 AT91M42800A Errata 210

24.1 Warning: Additional NWAIT Constraints 210

24.2 Possible Glitches on MCKO while Commuting Clock 213

24.3 Initializing SPI in Master Mode May Cause Problems 213

24.4 Break is Sent before Last Written Character 213

24.5 End of Break is not Guaranteed 213

24.6 SCK is Ignored at 32 kHz 214

24.7 SCK Maximum Frequency Relative to MCK in Synchronous Mode ... 214

24.8 PIO Input Filters are not Bit-to-bit Selectable 214

24.9 PIO Multi-drive Capability not Usable 214

25 Revision History 215

Table of Contents i

Atmel Corporation

2325 Orchard Parkway
San Jose, CA 95131, USA
Tel: 1(408) 441-0311
Fax: 1(408) 487-2600

Regional Headquarters

Europe

Atmel Sarl
Route des Arsenaux 41
Case Postale 80
CH-1705 Fribourg
Switzerland
Tel: (41) 26-426-5555
Fax: (41) 26-426-5500

Asia

Room 1219
Chinachem Golden Plaza
77 Mody Road Tsimshatsui
East Kowloon
Hong Kong
Tel: (852) 2721-9778
Fax: (852) 2722-1369

Japan

9F, Tonetsu Shinkawa Bldg.
1-24-8 Shinkawa
Chuo-ku, Tokyo 104-0033
Japan
Tel: (81) 3-3523-3551
Fax: (81) 3-3523-7581

Atmel Operations

Memory

2325 Orchard Parkway
San Jose, CA 95131, USA
Tel: 1(408) 441-0311
Fax: 1(408) 436-4314

Microcontrollers

2325 Orchard Parkway
San Jose, CA 95131, USA
Tel: 1(408) 441-0311
Fax: 1(408) 436-4314

La Chantrerie
BP 70602
44306 Nantes Cedex 3, France
Tel: (33) 2-40-18-18-18
Fax: (33) 2-40-18-19-60

ASIC/ASSP/Smart Cards

Zone Industrielle
13106 Rousset Cedex, France
Tel: (33) 4-42-53-60-00
Fax: (33) 4-42-53-60-01

1150 East Cheyenne Mtn. Blvd.
Colorado Springs, CO 80906, USA
Tel: 1(719) 576-3300
Fax: 1(719) 540-1759

Scottish Enterprise Technology Park
Maxwell Building
East Kilbride G75 0QR, Scotland
Tel: (44) 1355-803-000
Fax: (44) 1355-242-743

RF/Automotive

Theresienstrasse 2
Postfach 3535
74025 Heilbronn, Germany
Tel: (49) 71-31-67-0
Fax: (49) 71-31-67-2340

1150 East Cheyenne Mtn. Blvd.
Colorado Springs, CO 80906, USA
Tel: 1(719) 576-3300
Fax: 1(719) 540-1759

Biometrics/Imaging/Hi-Rel MPU/
High Speed Converters/RF Datacom

Avenue de Rochepleine
BP 123
38521 Saint-Egreve Cedex, France
Tel: (33) 4-76-58-30-00
Fax: (33) 4-76-58-34-80

Literature Requests
www.atmel.com/literature

Disclaimer: The information in this document is provided in connection with Atmel products. No license, express or implied, by estoppel or otherwise, to any intellectual property right is granted by this document or in connection with the sale of Atmel products. **EXCEPT AS SET FORTH IN ATMEL'S TERMS AND CONDITIONS OF SALE LOCATED ON ATMEL'S WEB SITE, ATMEL ASSUMES NO LIABILITY WHATSOEVER AND DISCLAIMS ANY EXPRESS, IMPLIED OR STATUTORY WARRANTY RELATING TO ITS PRODUCTS INCLUDING, BUT NOT LIMITED TO, THE IMPLIED WARRANTY OF MERCHANTABILITY, FITNESS FOR A PARTICULAR PURPOSE, OR NON-INFRINGEMENT. IN NO EVENT SHALL ATMEL BE LIABLE FOR ANY DIRECT, INDIRECT, CONSEQUENTIAL, PUNITIVE, SPECIAL OR INCIDENTAL DAMAGES (INCLUDING, WITHOUT LIMITATION, DAMAGES FOR LOSS OF PROFITS, BUSINESS INTERRUPTION, OR LOSS OF INFORMATION) ARISING OUT OF THE USE OR INABILITY TO USE THIS DOCUMENT, EVEN IF ATMEL HAS BEEN ADVISED OF THE POSSIBILITY OF SUCH DAMAGES.** Atmel makes no representations or warranties with respect to the accuracy or completeness of the contents of this document and reserves the right to make changes to specifications and product descriptions at any time without notice. Atmel does not make any commitment to update the information contained herein. Unless specifically provided otherwise, Atmel products are not suitable for, and shall not be used in, automotive applications. Atmel's products are not intended, authorized, or warranted for use as components in applications intended to support or sustain life.

© Atmel Corporation 2006. All rights reserved. Atmel®, logo and combinations thereof, Everywhere You Are® and others are registered trademarks or trademarks of Atmel Corporation or its subsidiaries. ARM®, the ARMPowered® logo and others are the registered trademarks or trademarks of ARM Ltd. Other terms and product names may be trademarks of others.

Printed on recycled paper.

1779D–ATARM–14-Apr-06