Features

- Main Supply 3.0V to 3.6V
- Independent 2.5V to 3.6V Auxiliary Supply for Backup Section
- Internal State Machine for Startup
- 25 mA/1.8V-2.75V Linear Low Drop Out Regulator with High PSRR and Low Noise (LDO1)
- 30 mA/1.5V-1.8V Linear Low Drop Out Regulator with High PSRR and Low Noise (LDO2)
- 60 mA/1.23V-1.5V-1.8V Linear Low Drop Out Regulator with High PSRR (LDO3)
- 2 mA/1.2V-1.5V-1.8V Linear Low Drop Out Regulator with Very Low Quiescent Current (LDO4)
- HPBG Economic High Performance Voltage Reference for LDO Supply to RF Sections
- LPBG Low Power Voltage Reference to LDO4 During Backup Battery Operation
- Internal Oscillator Generates Internal Master Clock
- Internal Reset Generator for Main Supply
- Additional External Reset Input
- Two Wire Interface (TWI) for Independent Activation and Output Voltage Programming for Each LDO
- Available in 3 x 3 x 0.9 mm 16-pin QFN Package
- Applications: GPS Modules, WLAN Devices, Wireless Modules

1. Description

The AT73C239 is a four-channel Power Supply Power Management Unit (PMU) available in a QFN 3 x 3 mm package. It is a fully integrated, low cost, combined Power Management device for wireless modules, GPS and WLAN devices. It integrates four Linear Low Drop Out (LDO) Regulators, three of which provide high-accuracy RF performance and one (LDO4) with very low quiescent current that is supplied by an external backup battery. A Low Power Bandgap (LPBG) requiring no external capacitor for decoupling, is used as reference voltage for LDO4 and starts when VBAT is present. LDO4 regulates output voltage with extremely low quiescent current, maximizing the lifetime of the backup battery. An Internal State Machine manages the startup of the other LDOs in the order of LDO3 then LDO1 then LDO2. An economic High Power Bandgap (HPBG) provides highly accurate, low noise voltage reference to LDOs 1, 2, 3. HPBG operates in switching mode thereby decreasing its current consumption and becomes inactive when not directly supplied by VIN current. When the RF LDOs are in idle mode, quiescent current is decreased to a minimum.

The AT73C239 features a Two-wire Interface (TWI) to increase the efficiency of the system by disabling LDOs when not needed.

Power Management and Analog Companions (PMAAC)

AT73C239 4-channel Power Management for Wireless Modules

6201C–PMAAC–31-Jul-07

2. Block Diagram

Figure 2-1. AT73C239 Functional Block Diagram

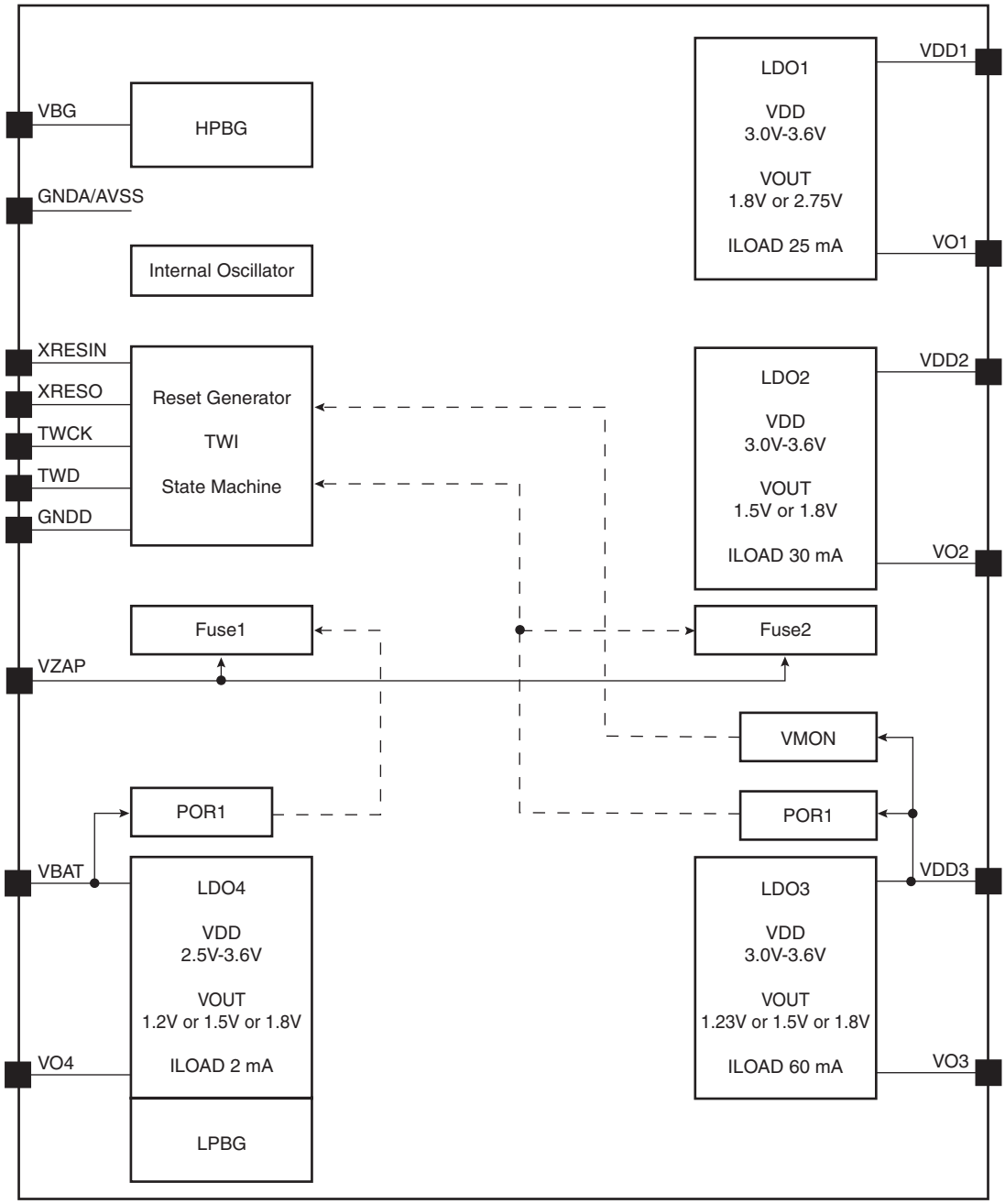

3. Pin Description

Table 3-1. Pin Description

Pin Name	I/O	Pin Number	Type	Function
XRESIN	Input	1	Digital	Reset in pin
VO3	Output	2	Analog	LDO3 output voltage
VDD3	Input	3	Power	LDO3 input voltage
XRESO	Output	4	Digital	Reset out pin
VO4	Output	5	Analog	LDO4 output voltage
GNDD	GND	6	Power	Digital ground
VBAT	Input	7	Power	LDO4 input voltage
VZAP(1)	input	8	Digital	Reserved for manufacturing purposes.
VDD2	Input	9	Power	LDO2 input voltage
VO2	Output	10	Analog	LDO2 output voltage
TWICK(2)	Input	11	Digital	TWI input
TWID(3)	Input/Output	12	Digital	TWI input/output
VDD1	Input	13	Power	LDO1 input voltage
VO1	Output	14	Analog	LDO1 output voltage
GNDA/AVSS	GND/Input	15	Analog	Analog ground and ESD ground
VBG	Output	16	Analog	Voltage reference for analog cells

Notes: 1. Connected to ground.
2. Connected to VDD1, 2, 3 if TWI is not used.
3. Connected to VDD1, 2, 3 if TWI is not used.

4. Package

4.1 16-pin QFN Package Outline

Figure 4-1 shows the orientation of the 16-pin QFN package.

Figure 4-1. 16-pin QFN Package - Bottom View

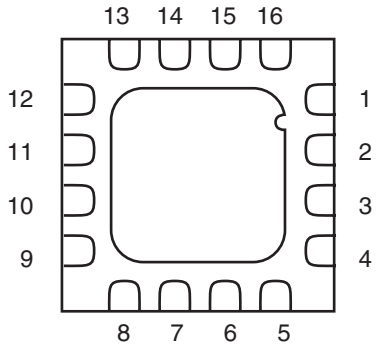

5. Application Block Diagram

Figure 5-1. AT73C239 Application Block Diagram

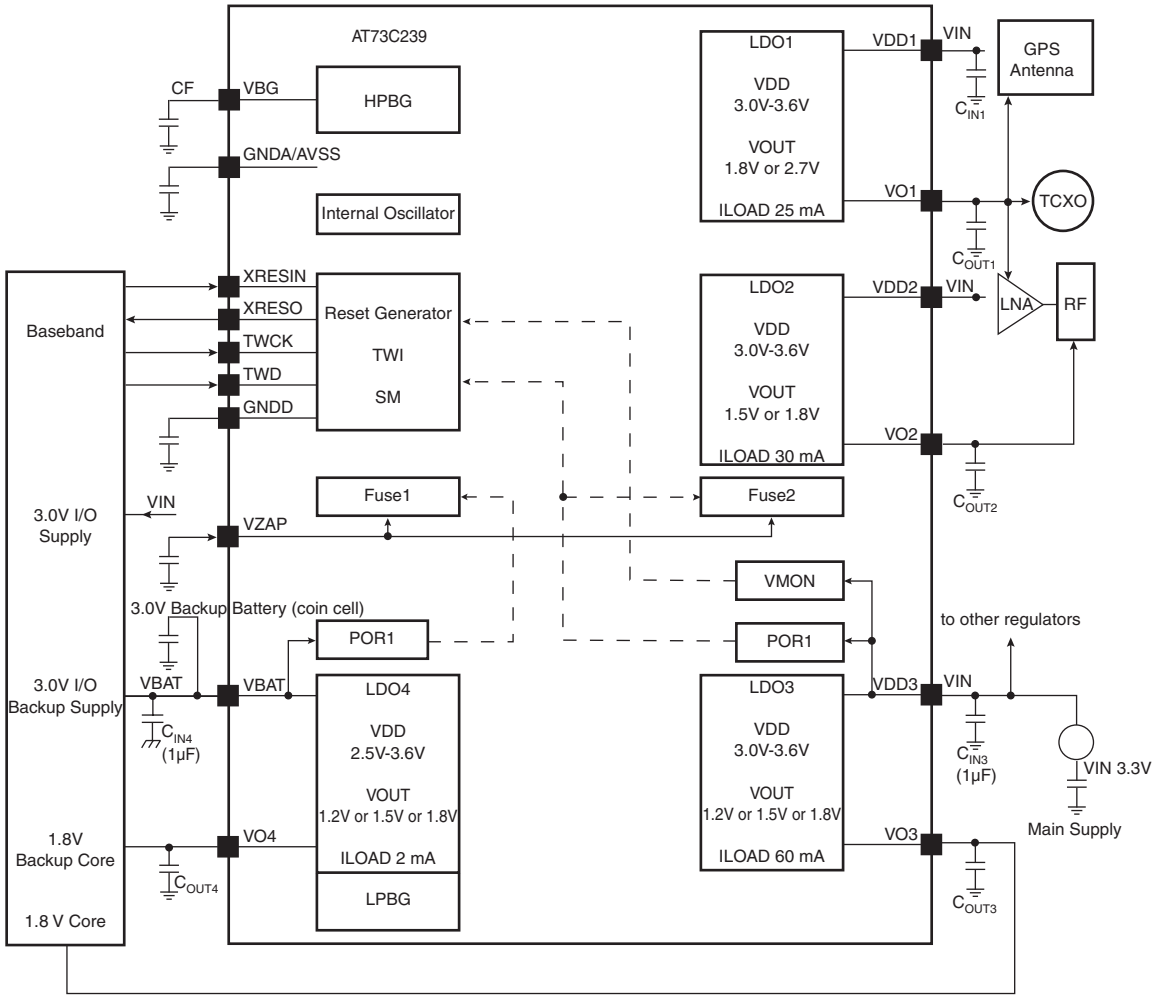

Table 5-1. Application Schematic Reference and Pin Description

Schematic Reference	Pin	Description
C_{IN1}	VDD1	1 µF ± 20% Ceramic Capacitor, X5R
C_{IN2}	VDD2	
C_{IN3}	VDD3	
C_{IN4}	VBAT	
C_{OUT1}	VO1	
C_{OUT2}	VO2	
C_{OUT3}	VO3	
C_{OUT4}	VO4	
CF	VBG	100 nF, ± 20% Ceramic Capacitor

6. Functional Description

The AT73C239 integrates the power supply channels described in this section.

6.1 LDO1

LDO1 is a 25 mA/1.8V-2.75V linear low drop out regulator with RF performance. LDO1 operates with supply from 3.0V to 3.6V and requires at least 300 mV of minimum drop-out. LDO1 supplies the RF section of wireless devices, showing high PSRR up to 100 kHz, and very low noise on wide frequency bandwidth. LDO1 requires a 1 µF output capacitor.

Figure 6-1. LDO1 Functional Diagram

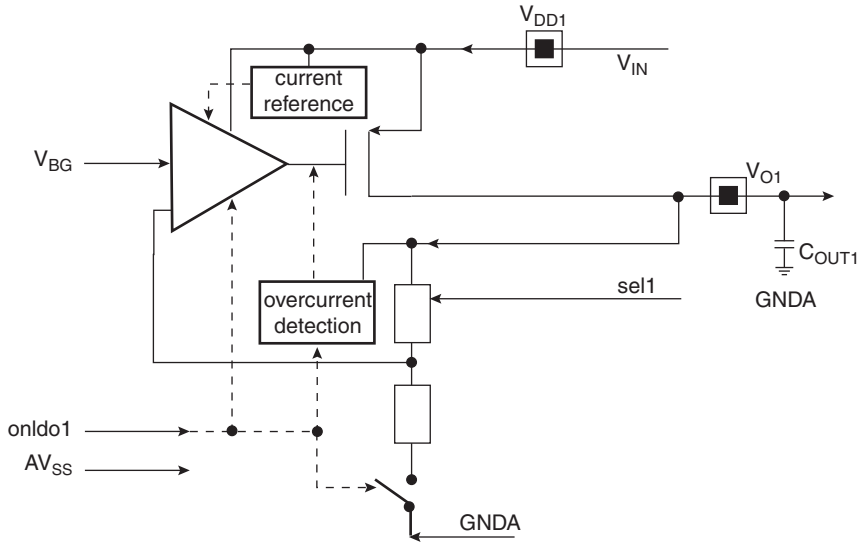

6.2 LDO2

LDO2 is a 30 mA/1.5V-1.8V linear low drop out regulator with RF performance. LDO2 operates with supply from 3.0V to 3.6V and needs at least 300 mV of minimum drop-out. LDO2supplies the RF section of wireless devices, showing high PSRR up to 100 kHz and very low noise on wide frequency bandwidth. LDO2 requires a 1 µF output capacitor.

Figure 6-2. LDO2 Functional Diagram

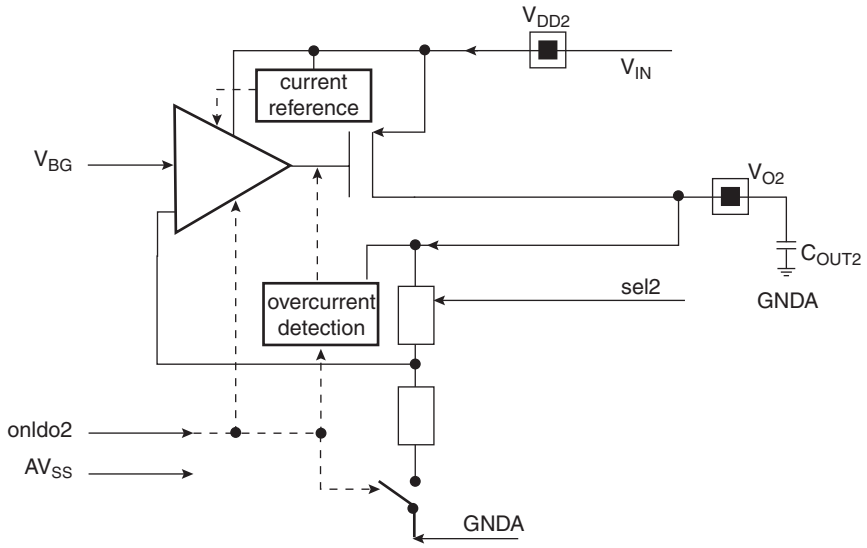

6.3 LDO3

LDO3 is a 60 mA/1.2V or 1.5V or 1.8V linear low drop out regulator with RF performance. LDO3 operates with supply from 3.0V to 3.6V and needs at least 300 mV of minimum drop-out. LDO3 supplies the RF section of wireless devices, showing high PSRR up to 100 kHz and low noise on wide frequency bandwidth. LDO3 requires a 1 µF output capacitor.

Figure 6-3. LDO3 Functional Diagram

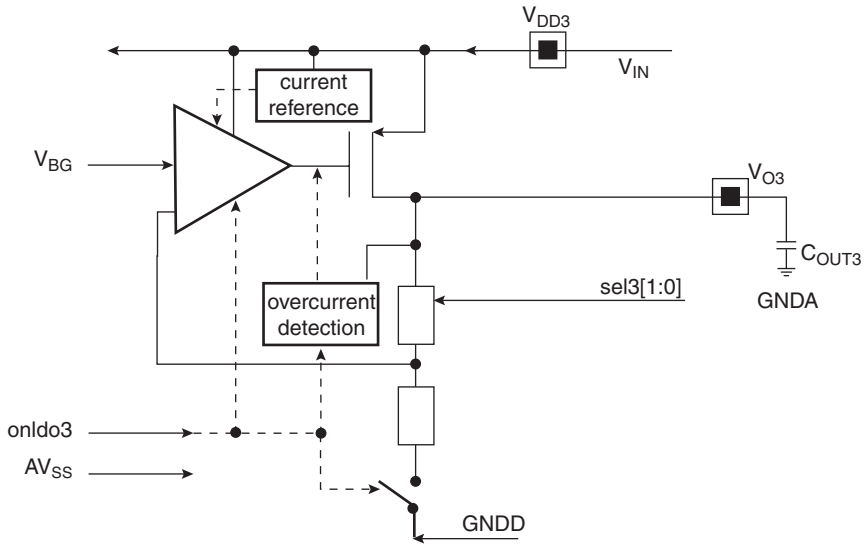

6.4 LD04

LDO4 is a 2 mA/1.2V or 1.5V or 1.8V low drop out voltage regulator with very low quiescent current. LDO4 operates with supply from 2.5V to 3.6V and needs at least 300 mV of minimum drop-out. LDO4 supplies the very low power section of the wireless baseband. It is usually supplied by the external backup battery and regulates voltage with very low quiescent current, maximizing the lifetime of the backup battery. LDO4 requires a 1 µF output capacitor or 470 nF if the load is less than 250 µA. LDO4 is always on once the battery is plugged in. The regulator is activated when POR1 is released.

Figure 6-4. LDO4 Functional Diagram

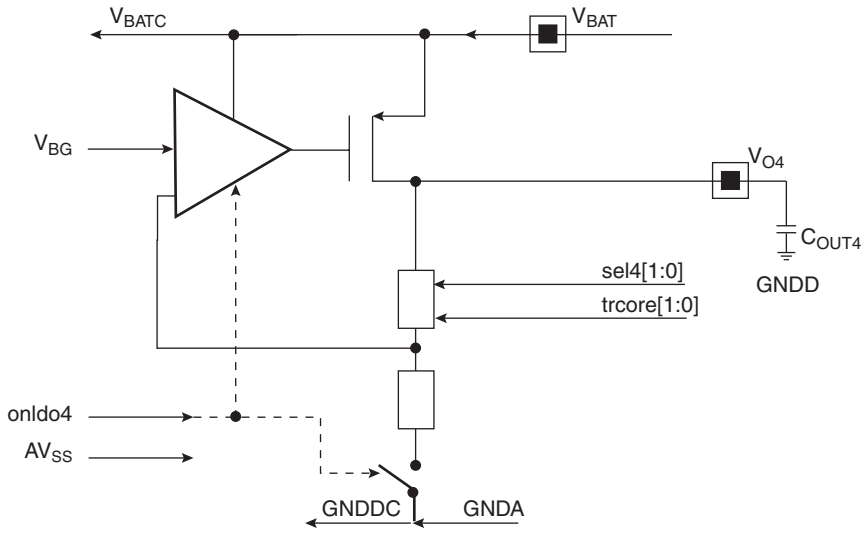

6.5 High Performance Bandgap (HPBG)

HPBG provides highly accurate, low noise voltage reference to LDOs that supply RF sections. HPBG operates in switching mode, thus decreasing its current consumption. The economic High Performance Bandgap is particularly efficient when RF LDOs are in idle mode (output voltage provided with very low output current e.g. < 1 mA), as the RF section is not active and quiescent current must be decreased as much as possible.

HPBG requires an external 100 nF ceramic capacitor to achieve very low noise high-accuracy voltage reference.

6.6 Low Power Bandgap (LPBG)

LPBG is used as reference voltage for LDO4. LPBG starts up as soon as the VBAT pin is active and does not require an external capacitor for decoupling.

6.7 Reset Generator

The reset generator produces output reset (XRSTOUT) at least 100 ms after input reset state is activated. Input reset state can be produced the following:

- External manual reset connected to the XRESIN pin
- Internal POR2 monitoring V_{IN} (on VDD3 pin). POR2 is designed with a maximum threshold at 1.81V.

XRESO pin can be generated only if V_{IN} is present.

6.8 Internal State Machine

The internal state machine manages the start up of the regulators connected to VDD1, VDD2 and VDD3 pins. The startup configuration is in the following order:

1. LDO3
2. LDO1
3. LDO2

6.9 Power on Reset on VBAT (POR1)

POR1 monitors the VBAT pin and generates an internal signal (VPOR1) to enable a fuse read operation for LDO4 output voltage programming and LDO4 startup. VPOR1 is released when VBAT is higher than 1.5V ± 300 mV.

6.10 Power on Reset on VDD3 (POR2)

POR2 monitors the VDD3 pin and generates an internal signal (VPOR2) to reset the internal State Machine and startup the Two-wire Interface (TWI). VPOR2 also enables the fuse read operation for LDO1, LDO2, LDO3 output voltage programming, reference voltage and internal oscillator trimming. VPOR2 is released when V_{IN} is higher than 1.5V ± 300 mV.

6.11 Internal Oscillator

The internal oscillator generates the internal master clock to synchronize the state machine that monitors start up of the LDOs and controls HPBG.

6.12 Voltage Supply Monitor on VDD3 (VMON)

VMON monitors the VDD3 pin and generates an internal signal to enable the state machine to start up the LDOs and to generate the XRESO signal. Threshold is set to 2.7V at rising and 2.6V at shut down.

6.13 Two-wire Interface (TWI)

The TWI can be used to activate, disable and set the output voltage of the LDO1, 2, 3, 4 regulators. (V_{DD3} must be present in order for TWI to be used with LDO4.)

7. Startup Procedure

At VBAT Rising:

- LPBG automatically starts up.
- POR1 starts up LDO4.

At VDD3 Rising:

- POR2 enables the following:
  - Supply Monitor with shutdown threshold setup at 2.7V in order to prevent corruption in the baseband chip, when the core is still supplied
  - Internal State machine that enables the other circuits according to the diagram shown in Figure 7-1 on page 12.
  - Two Wire Interface

At VDD3 Falling:

- The Supply Monitor generates a shut-down control signal when V_{DD3} reaches 2.6V.
- The State Machine, upon receiving the shut-down control signal, generates the XRESO signal to set the baseband chip in reset mode.
- The State Machine switches off LDO1, LDO2 and LDO3. HPBG is kept on in order to provide a fast startup of the LDOs in case of glitches on V_{DD3}.

7.1 Startup Diagram

Figure 7-1. Startup Diagram

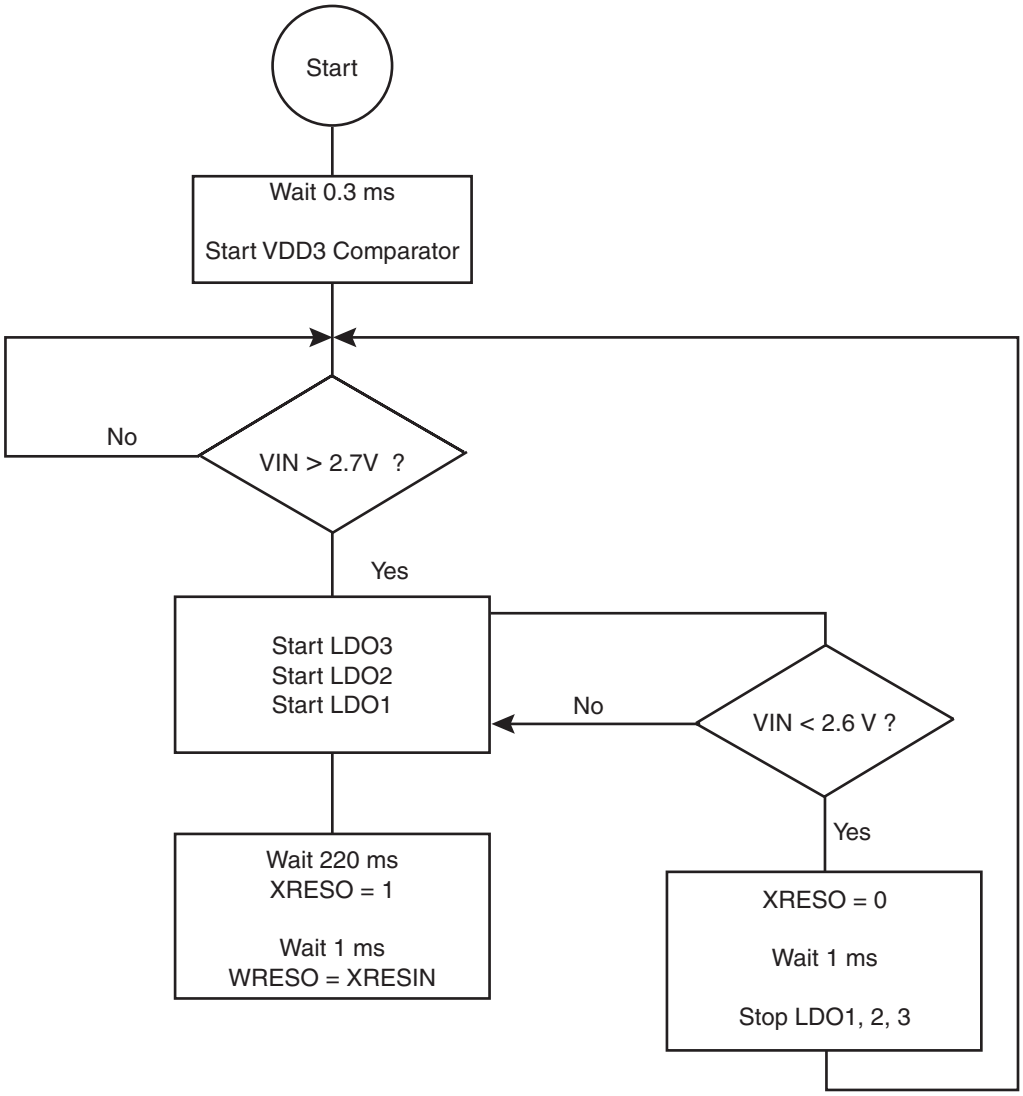

POR2, supplied by V_{DD3}, resets the startup state machine. After 0.3 ms, the V_{DD3} comparator is started. If V_{DD3} is greater than 2.7V, LDO regulators are started in the following order: LDO3, LDO2, LDO1. During LDO regulator V_{DD} startup, voltage is not checked.

Then XRESO is kept grounded for 220 ms, tied high for 1 ms, before following XRESIN. During that state, V_{DD3} voltage is monitored and if it is lower than 2.6V, LDO regulators 1, 2 and 3 are stopped and XRESO is grounded.

Both XRESIN and V_{DD3} comparator output are debounced at rising and falling edges for two 10 kHz clock cycles. Debounce time is typically between 100 µs and 200 µs. Timings are defined ± 40%.

8. Normal Procedure

The State Machine monitors the XRESIN pin and provides the proper XRESO pin signal when reset occurs.

Through the Two-wire Interface (TWI), the user can control and change the output voltage delivered by LDO1, LDO2, LDO3 and LDO4.

9. Two-wire Interface (TWI) Protocol

The two-wire interface interconnects components on a unique two-wire bus, made up of one clock line and one data line with speeds up to 400 Kbits per second, based on a byte oriented transfer format. The TWI is slave only and has single byte access.

The TWI adds flexibility to the power supply solution, enabling LDO regulators to be controlled depending on the instantaneous application requirements.

The AT73C239 has the following 7-bit address: **1001000**.

Attempting to read data from register addresses not listed in this section results in 0xFF being read out.

- TWCK is an input pin for the clock
- TWD is an open-drain pin driving or receiving the serial data

The data put on TWD line must be 8 bits long. Data is transferred MSB first. Each byte must be followed by an acknowledgement.

Each transfer begins with a START condition and terminates with a STOP condition.

- A high-to-low transition on TWD while TWCK is high defines a START condition.
- A low-to-high transition on TWD while TWCK is high defines a STOP condition.

Figure 9-1. START and STOP Conditions

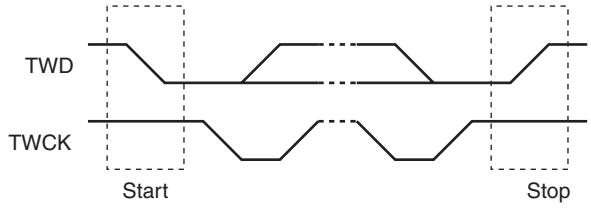

Figure 9-2. Transfer Format

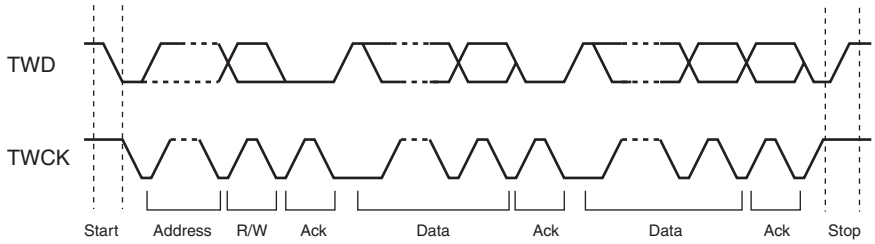

After the host initiates a START condition, it sends the 7-bit slave address defined above to notify the slave device. A read/write bit follows (read = 1, write = 0).

The device acknowledges each received byte. The first byte sent after the device address and the R/W bit, is the address of the device register the host wants to read or write.

For a write operation the data follows the internal address. For a read operation a repeated START condition needs to be generated followed by a read on the device.

Figure 9-3. Write Operation



Figure 9-4. Read Operation

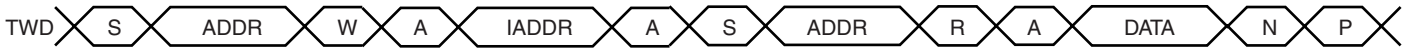

- S = Start
- P = Stop
- W = Write
- R = Read
- A = Acknowledge
- N = Not Acknowledge
- DADR= Device Address
- IADR = Internal Address

10. Normal Modes and Quiescent Current

Table 10-1. Normal Modes and Quiescent Current

Modes	Conditions	Quiescent [µA]	
		typ	max
Backup Battery	V_{BAT} present, V_{DD3} not present LDO4 on	10	30
Normal	V_{BAT} present, V_{DD3} present LDO4 on LDO1 on LDO2 on LDO3 on	800	

11. Electrical Characteristics

11.1 Absolute Maximum Ratings

Table 11-1. Absolute Maximum Ratings

Operating Temperature (Industrial) ..... -40° C to +85° C
Storage Temperature ..... -55°C to +150°C
Power Supply Input on V_{BAT} ..... -0.3V to + 3.6V
Power Supply Input on V_{DD1},V_{DD2},V_{DD3} ..... -0.3V to + 3.6V
Digital IO Input Voltage ..... -0.3V to + 3.6V
TWI IO Input Voltage ..... -0.3V to + 5.5V
All Other Pins..... -0.3V to + 3.6V

*NOTICE: Stresses beyond those listed under “Absolute Maximum Ratings” may cause permanent damage to the device. This is a stress rating only and functional operation of the device at these or other conditions beyond those indicated in the operational sections of this specification is not implied. Exposure to absolute maximum rating conditions for extended periods may affect device reliability.

11.2 Recommended Operating Conditions

Table 11-2. Recommended Operating Conditions

Parameter	Condition	Min	Max	Unit
Operating Temperature		-40	85	°C
Power Supply Input	V_{DD1}, V_{DD2}, V_{DD3}	3.0	3.6	V
	V_{BAT}	2.5	3.6	

12. Timing Diagram

Figure 12-1. AT73C239 Timings

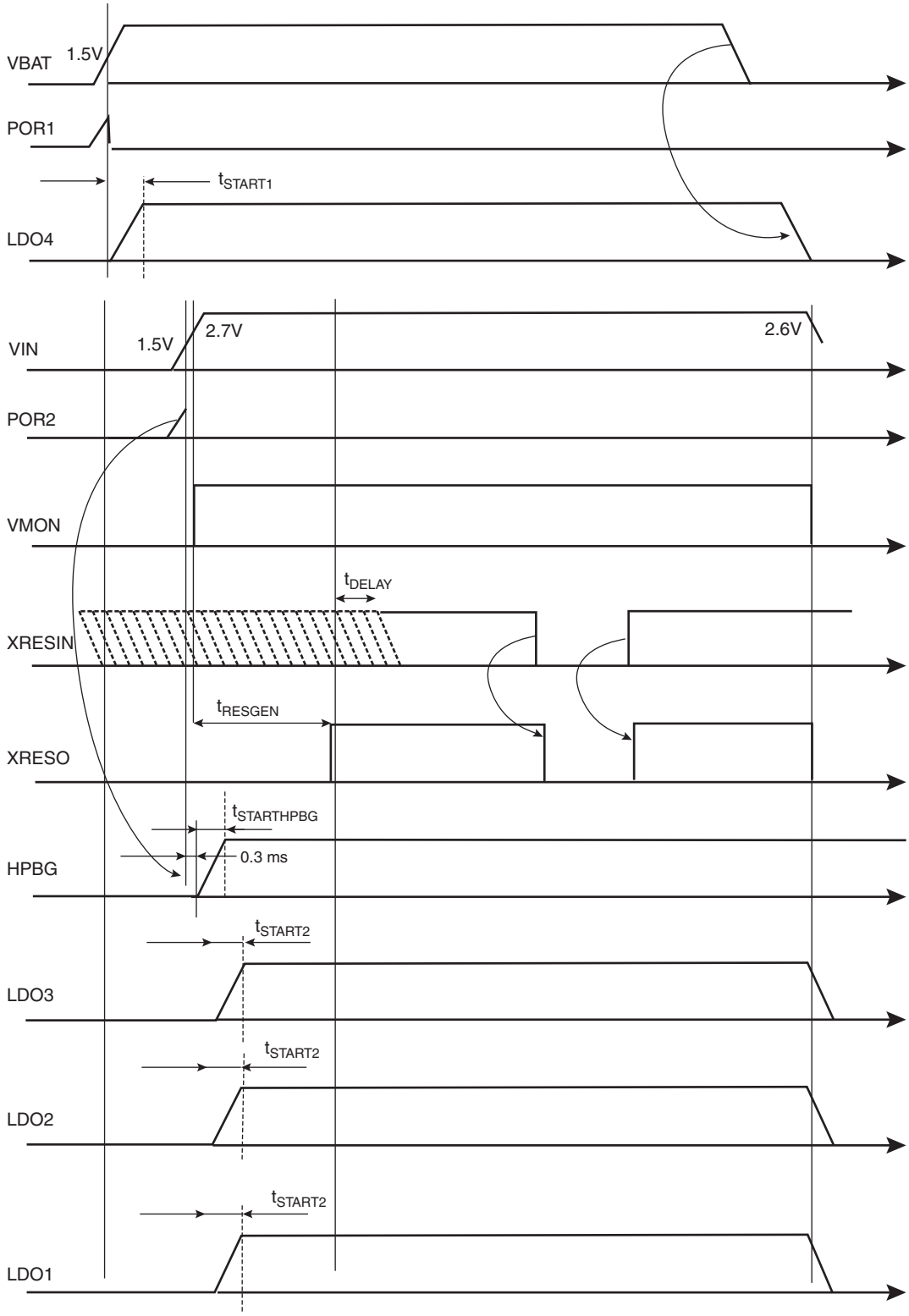

At V_{DD3} startup XRESIN is taken into account only if it occurs after t_{DELAY}.

Table 12-1. Timing Parameters

Parameter	Signal	Constraint	Min	Max	Unit
t_{START1}	V_{O4}	LDO4 Startup time	10	100	µsec
t_{START2}	V_{O1},V_{O2}, V_{O3}	LDO1,2,3 Startup time	10	100	µsec
$t_{STARTHPBG}$	V_{BG}	HPBG startup time		2	ms
t_{RESGEN}	XRESOUT	Delay to XRESOUT active	100	500	ms
t_{DELAY}				1	ms

13. Electrical Specification

13.1 LD01

Table 13-1. LDO1 Parametric Table

Symbol	Parameter	Comments	Min	Typ	Max	Units
V_{DD1}	Operating supply voltage	Switching Regulated	3.0	3.3	3.6	V
V_{O1}	Output voltage	Factory programmed	2.70	2.75	2.80	V
		Programmable	1.75	1.8	1.85	V
I_1	Load current				25	mA
I_{QC}	Quiescent current				300	µA
I_{SC}	Shutdown current	HiZ output			1	µA
I_{SH}	Short circuit current			200		mA
t_R	Startup time				100	µs
ΔV_{DC}	Line regulation static	From 3.0V to 3.6V		2		mV
ΔV_{DC}	Load regulation static	From 10% to 100% I_1		2		mV
		From 0 to 100% I_1		7		
ΔV_{TRAN}	Line regulation dynamic	From 3.1V to 3.6V $t_R = t_F = 5$ µs, $I_1 = 5$ mA		2		mV
ΔV_{TRAN}	Load regulation dynamic	From 10% to 100% I_1, $t_R = t_F = 5$ µs,		2.5		mV
PSRR	Power Supply Rejection Ratio	Sine Wave, 100 kHz frequency, 3.3V mean 200 m v_{PP}		48		dB
		Sine Wave, 10 kHz frequency, 3.3V mean, 200 m V_{PP}		55		dB
		Sine Wave, 1 kHz frequency, 3.3V mean 200 m V_{PP}		60		dB
ΔV_{OUT}	StartUp Overshoot			40		mV
V_N	Output Noise	10 Hz - 100 kHz		45		μV_{RMS}
V_{NT}	Total Output Noise	10 Hz - 100 kHz		55		μV_{RMS}

Table 13-2. LDO1 External Components

Schematic Reference	Description
C_{OUT1}	X5R 1 µF ± 20% ceramic capacitor

Table 13-3. Control Modes

onldo1	sel1	VO1
0	0	HiZ
1	0	2.75V
1	1	1.8V

13.2 LDO2

Table 13-4. LDO2 Parametric Table

Symbol	Parameter	Comments	Min	Typ	Max	Units
V_{DD2}	Operating supply voltage	Switching Regulated	3.0	3.3	3.6	V
V_{02}	Output voltage	Factory programmed	1.75	1.8	1.85	V
		Programmable	1.45	1.5	1.55	V
I_2	Load current				30	mA
I_{QC}	Quiescent current				300	µA
I_{SC}	Shutdown current	HiZ output			1	µA
I_{SH}	Short circuit current			200		mA
t_R	Startup time				100	µs
ΔV_{DC}	Line regulation static	From 3.0V to 3.6V		2		mV
ΔV_{DC}	Load regulation static	From 10% to 100% I_2		2		mV
		From 0 to 100% I_2		3		
ΔV_{TRAN}	Line regulation dynamic	From 3.1V to 3.6V $t_R = t_F$ = 5 µs, I_2 = 30 mA		2		mV
ΔV_{TRAN}	Load regulation dynamic	From 10% to 100% I_1, $t_R = t_F$ = 5 µs,		3		mV
PSRR	Power Supply Rejection Ratio	Sine Wave, 100 kHz frequency, 3.3V mean 200 m V_{PP}		40		dB
		Sine Wave, 10 kHz frequency, 3.3V mean, 200 m V_{PP}		50		dB
		Sine Wave, 1 kHz frequency, 3.3V mean 200 m V_{PP}		70		dB
ΔV_{OUT}	Startup Overshoot			30		mV
V_N	Output Noise	10 Hz - 100 kHz		35		μV_{RMS}
V_{NT}	Total Output Noise	10 Hz - 100 kHz		45		μV_{RMS}

Table 13-5. External Components

Schematic Reference	Description
C_{OUT2}	X5R 1 µF ± 20% ceramic capacitor

Table 13-6. Control Modes

on2ldo	sel2	VO2
0	X	HiZ
1	0	1.8V
1	1	1.5V

13.3 LDO3

Table 13-7. LDO3 Parametric Table

Symbol	Parameter	Comments	Min	Typ	Max	Units
V_{DD3}	Operating supply voltage	Switching Regulated	3.0	3.3	3.6	V
V_{O3}	Output voltage	Factory programmed	1.75	1.8	1.85	V
		Programmable	1.45	1.5	1.55	V
		Programmable	1.18	1.23	1.28	V
I_3	Load current				60	mA
I_{QC}	Quiescent current				300	µA
I_{SC}	Shutdown current	HiZ output			1	µA
I_{SH}	Short circuit current			200		mA
t_R	Startup time				100	µs
ΔV_{DC}	Line regulation static	From 3.0V to 3.6V		2		mV
ΔV_{DC}	Load regulation static	From 10% to 100% I_3		2		mV
		From 0 to 100% I_3		3		
ΔV_{TRAN}	Line regulation dynamic	From 3.1V to 3.6V $t_R = t_F = 5$ µs, $I_3 = 60$ mA		2		mV
ΔV_{TRAN}	Load regulation dynamic	From 10% to 100% I_1, $t_R = t_F = 5$ µs,		3		mV
PSRR	Power Supply Rejection Ratio	Sine Wave, 100 kHz frequency, 3.3V mean 200 m V_{PP}		40		dB
		Sine Wave, 10 kHz frequency, 3.3V mean, 200 m V_{PP}		50		dB
		Sine Wave, 1 kHz frequency, 3.3V mean 200 m V_{PP}		70		dB
ΔV_{OUT}	Startup Overshoot			30		mV
V_N	Output Noise	10 Hz - 100 kHz, without V_{BG}		35		μV_{RMS}
V_{NT}	Total Output Noise	10 Hz - 100 kHz		45		μV_{RMS}

Table 13-8. External Components

Schematic Reference	Description
C_{OUT3}	X5R 1 µF ± 20% ceramic capacitor

Table 13-9. Control Modes

onldo3	sel3[0]	sel3[1]	VO3
0	X	X	HiZ
1	0	0	1.8V
1	1	0	1.5V
1	0	1	1.23V

13.4 LDO4

LDO4 generates 1.2V, 1.5V or 1.8V voltage from VBAT supply. Max DC load is 2 mA. The regulator is activated when POR1 is released.

Table 13-10. LDO4 Parametric Table

Symbol	Parameter	Conditions	Min	Typ	Max	Unit
V_{BAT}	Operating supply voltage	Backup Battery or Supercap	2.5		3.6	V
V_{O4}	Output voltage	Factory programmed	1.7	1.8	1.9	V
		Programmable	1.4	1.5	1.6	V
		Programmable	1.1	1.2	1.3	V
I_4	Load current	DC load current			2	mA
I_{QC}	Quiescent current			3	5	µA
I_{SC}	Shutdown current				0.5	µA
t_S	Startup time				200	µs
ΔV_{DC}	Line regulation static	$2.5V < V_{BAT} < 3.6V$			100	mV
ΔV_{DC}	Load regulation static	$0 < I_4 < 2$ mA			100	mV

Table 13-11. LDO4 External Components

Schematic Reference	Description
C_{OUT4}	X5R 1 µF ± 20% capacitor

Table 13-12. onldo4 sel4[1:0] Control Modes

onldo4	sel4<1>	sel4<0>	VO4
0	X	X	HiZ
1	0	0	1.8V
1	0	1	1.5V
1	1	0	1.2V

Table 13-13. trcore[1:0] Control Modes

trcore<1>	trcore<0>	VO4
0	0	typ
0	1	+ 8 0mV
1	0	- 80 mV
1	1	

13.5 High Performance Bandgap (HPBG)

Table 13-14. HPBG Parametric Table

Symbol	Parameter	Conditions	Min	Typ	Max	Units
V_{BG}	Output voltage	Factory trimmed		1.231		V
I_{SC}	Shutdown current	encore = en = 0, dcrun = 0 (1)		1	6	µA
I_{QC}	Quiescent current				30	µA
t_S	Startup time	C_F= 100 nF		1	2	ms
V_N	Output noise	BW 10 Hz to 100 kHz		7		μV_{RMS}
PSRR	Power Supply Rejection Ratio	F = 100 Hz		65		dB

Table 13-15. External Components

Schematic Reference	Description
C_F	X5R 100 nF ± 20% ceramic capacitor minimum

13.6 Low Power Bandgap (LPBG)

Table 13-16. LPBG Parametric Table

Symbol	Parameter	Conditions	Min	Typ	Max	Unit
V_{BAT}	Operating supply voltage	Backup Battery or Supercap	2.5		3.6	V
I_{QC}	Quiescent current			4	7.5	µA
t_S	Startup time				100	µs
V_{LPBG}	Bandgap Voltage		1.15	1.2	1.25	V

13.7 Power On Reset on VBAT (POR1)

Table 13-17. POR1 Parametric Table

Symbol	Parameter	Conditions	Min	Typ	Max	Unit
V_{BAT}	Operating supply voltage	Backup Battery or Supercap	2.5		3.6	V
I_{QC}	Quiescent current			3		µA
V_{PON}	POR1 on threshold			1.45		V
V_{POFF}	POR1 off threshold			1.5		V

13.8 Power On Reset on VDD3 (POR2)

Table 13-18. POR2 Parametric Table

Symbol	Parameter	Conditions	Min	Typ	Max	Unit
V_{DD3}	Operating supply voltage	Switching regulated	0		3.6	V
I_{QC}	Quiescent current			3		µA
V_{PON}	POR2 on threshold			1.45		V
V_{POFF}	POR1 off threshold			1.5		V

13.9 Voltage Monitor

Table 13-19. Voltage Monitor Parametric Table

Symbol	Parameter	Conditions	Min	Typ	Max	Unit
I_{QC}	Quiescent current				20	µA
V_{PON}	POR2 on threshold	on V_{DD3}	2.7		2.72	V
V_{POFF}	POR1 off threshold	on V_{DD3}	2.6		2.60	V

13.10 XRESIN

Table 13-20. XRESIN Parametric Table

Symbol	Parameter	Conditions	Min	Typ	Max	Unit
V_I	Input supply voltage range	driven by CPU GPIO	1.8		3.3	V
		driven by CPU open drain output	Hiz			V
		connected to V_{DD3} when not used	V_{DD3}			V

13.11 XRESO

Table 13-21. XRESO Parametric Table

Symbol	Parameter	Conditions	Min	Typ	Max	Unit
V_I	Input supply voltage range		1.8		3.3	V

13.12 TWICK

Table 13-22. TWICK Parametric Table

Symbol	Parameter	Conditions	Min	Typ	Max	Unit
V_I	Input supply voltage range		1.8		5.5	V

13.13 TWID

Table 13-23. TWID Parametric Table

Symbol	Parameter	Conditions	Min	Typ	Max	Unit
V_I	Input supply voltage range		1.8		5.5	V

14. AT73C239 User Interface

Table 14-1. AT73C239 Register Mapping

Offset	Register	Register Description	Access	Reset Value
0×00	LDO_CTRL	LDO Control	Read/Write	0x0F
0×08	LDO_TRIM1	LDO 1,2,3 Trim	Read/Write	0x00
0×0A	LDO_TRIM4	LDO4 Trim	Read/Write	0x00

14.1 LDO Control Register

Register Name: LDO_CTRL

Reset State: 0X0F

Access: Read/Write

7	6	5	4	3	2	1	0
–	–	–	–	Onldo4	Onldo3	Onldo2	Onldo1

- **Onldo1:**

LDO1 enable (active high) reset value = 1.

- **Onldo2:**

LDO2 enable (active high) reset value = 1.

- **Onldo3:**

LDO3 enable (active high) reset value = 1.

- **Onldo4:**

LDO4 enable (active high) reset value = 1.

14.2 LDO 1, 2, 3 Trim Register

Register Name: LDO_TRIM1

Reset State: 0X08

Access: Read/Write

7	6	5	4	3	2	1	0
–	–	–	Sel1	Sel2	Sel3		–

- **Sel3**

LDO3 output voltage select, reset = 00

- **Sel2**

LDO2 output voltage select, reset = 0

- **Sel1**

LDO1 output voltage select, reset = 0

Sel1	VO1	Sel2	VO2	Sel3	VO3
0	2.75V	0	1.8V	00	1.8V
1	1.8V	1	1.5V	01	1.5V
				10	1.23V
				11	1.8V

14.3 LDO 4 Trim Register

Register Name: LDO_TRIM4

Reset State: 0X0A

Access: Read/Write

7	6	5	4	3	2	1	0
–	–	–	–	Sel4		–	–

- **Sel4**

LDO4 output voltage select, reset = 00

Sel4	VO4
00	1.8V
01	1.5V
10	1.2V
11	1.2V

15. Package Information

Figure 15-1. Mechanical Package Drawing for 16-lead Quad Flat No Lead Package

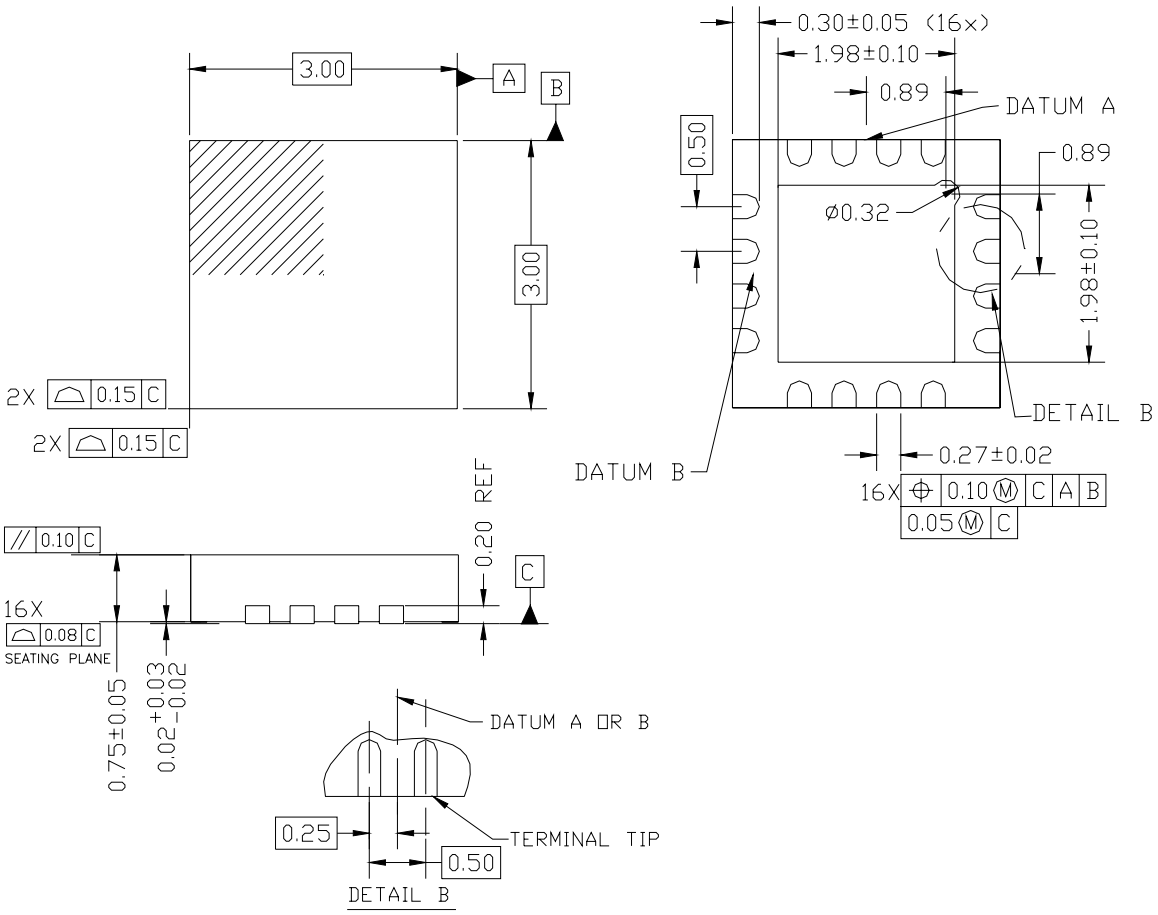

Note: All dimensions are in mm.

16. Ordering Information

Table 16-1. Ordering Information

Ordering Code	Package	Package Type	Temperature Operating Range
AT73C239	QFN3x3 mm	Green	0°C to +70°C

Revision History

Doc. Rev	Date	Comments	Change Request Ref.
6201A	01-Sep-05 11-Oct-05	First issue Unqualified on Intranet	
6201B	03-Mar-06	Changed HPBG minimum requirement information in Section 6.5 ”High Performance Bandgap (HPBG)” on page 9. Updated Figure 7-1 on page 12 with new values. Updated Figure 12-1 on page 17 with new information for LDO2 and LDO3 signals. Updated Table 13-14, “HPBG Parametric Table,” on page 23 with max value for startup time and changed condition.	2472
6201C	09-Jul-07	Added Section 4. ”Package” on page 4.	4591

Headquarters

Atmel Corporation
2325 Orchard Parkway
San Jose, CA 95131
USA
Tel: 1(408) 441-0311
Fax: 1(408) 487-2600

International

Atmel Asia
Room 1219
Chinachem Golden Plaza
77 Mody Road Tsimshatsui
East Kowloon
Hong Kong
Tel: (852) 2721-9778
Fax: (852) 2722-1369

Atmel Europe
Le Krebs
8, Rue Jean-Pierre Timbaud
BP 309
78054 Saint-Quentin-en-
Yvelines Cedex
France
Tel: (33) 1-30-60-70-00
Fax: (33) 1-30-60-71-11

Atmel Japan
9F, Tonetsu Shinkawa Bldg.
1-24-8 Shinkawa
Chuo-ku, Tokyo 104-0033
Japan
Tel: (81) 3-3523-3551
Fax: (81) 3-3523-7581

Product Contact

Web Site
www.atmel.com
www.atmel.com/PowerMgmnt

Technical Support
pmaac@atmel.com

Sales Contacts
www.atmel.com/contacts/

Literature Requests
www.atmel.com/literature

Disclaimer: The information in this document is provided in connection with Atmel products. No license, express or implied, by estoppel or otherwise, to any intellectual property right is granted by this document or in connection with the sale of Atmel products. **EXCEPT AS SET FORTH IN ATMEL'S TERMS AND CONDITIONS OF SALE LOCATED ON ATMEL'S WEB SITE, ATMEL ASSUMES NO LIABILITY WHATSOEVER AND DISCLAIMS ANY EXPRESS, IMPLIED OR STATUTORY WARRANTY RELATING TO ITS PRODUCTS INCLUDING, BUT NOT LIMITED TO, THE IMPLIED WARRANTY OF MERCHANTABILITY, FITNESS FOR A PARTICULAR PURPOSE, OR NON-INFRINGEMENT. IN NO EVENT SHALL ATMEL BE LIABLE FOR ANY DIRECT, INDIRECT, CONSEQUENTIAL, PUNITIVE, SPECIAL OR INCIDENTAL DAMAGES (INCLUDING, WITHOUT LIMITATION, DAMAGES FOR LOSS OF PROFITS, BUSINESS INTERRUPTION, OR LOSS OF INFORMATION) ARISING OUT OF THE USE OR INABILITY TO USE THIS DOCUMENT, EVEN IF ATMEL HAS BEEN ADVISED OF THE POSSIBILITY OF SUCH DAMAGES.** Atmel makes no representations or warranties with respect to the accuracy or completeness of the contents of this document and reserves the right to make changes to specifications and product descriptions at any time without notice. Atmel does not make any commitment to update the information contained herein. Unless specifically provided otherwise, Atmel products are not suitable for, and shall not be used in, automotive applications. Atmel's products are not intended, authorized, or warranted for use as components in applications intended to support or sustain life.

© 2007 Atmel Corporation. All rights reserved. Atmel®, logo and combinations thereof and others are registered trademarks or trademarks of Atmel Corporation or its subsidiaries. Other terms and product names may be trademarks of others.