AT5558

Preliminary Product Information

5-Channel DSC Motor Driver

Features

- Independent 5-Channel H-Bridge
- Built-in 4 constant voltage drivers, all of those drivers with brake function.
- Built-in 1 constant current drivers with brake function.
- Low on-resistance <1.20Ω (typ.)
- Low Voltage operation
- Built-in Thermal Shutdown Function
- QFN-32 Package

General Description

The AT5558 is a 5-channel H-bridge drivers IC for DSC motor application. It built in with 4 constant voltage drivers and 1 constant current block to drive auto-focus, zoom, shutter, auto-exposure motors.

Applications

•DSC motor Driver

** Protected by U.S. Patent #6,943,514*

Block Diagram

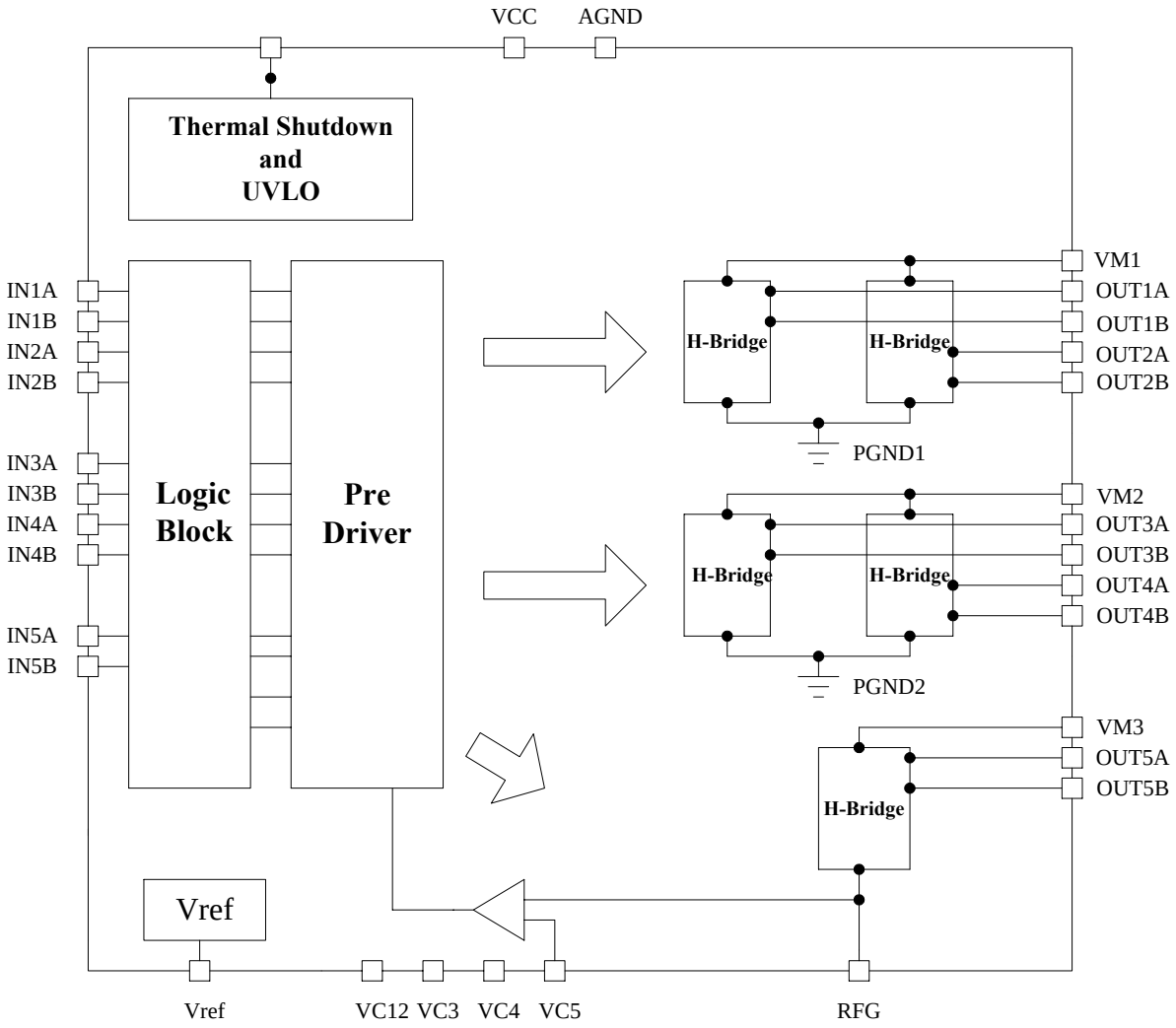

Aimtron reserves the right without notice to change this circuitry and specifications.

Pin Configuration

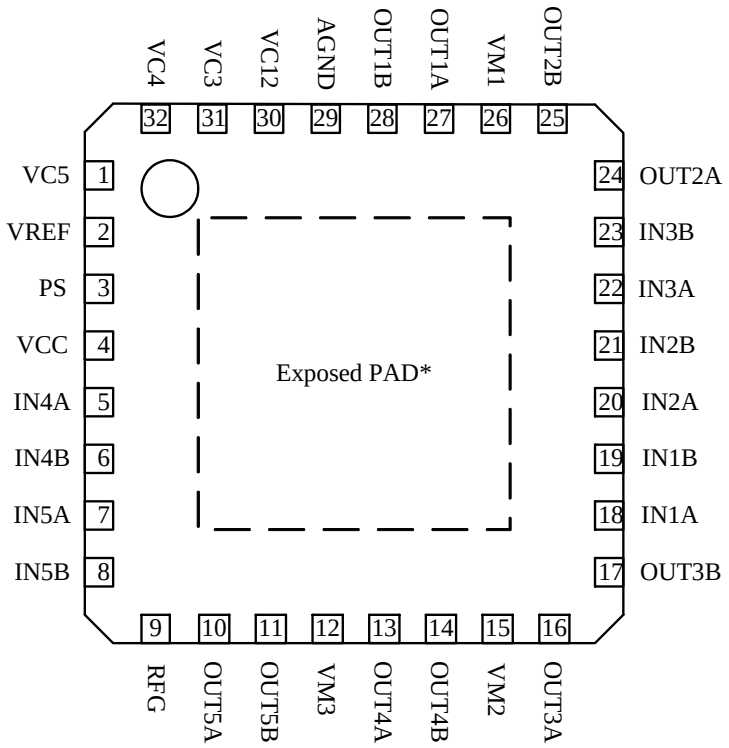

*The exposed pad must be connected to GND.

Ordering Information

Part number	Package	Marking
AT5558N_GRE	QFN32, Green	AT5558N

Pin Description

Pin NO.	Symbol	I/O	Description
1	VC5	I	Voltage for current limit control of the constant current driver5
2	VREF	O	Reference voltage being divided for VC12, 3, 4, 5 to individually use
3	PS	I	Power save which can force all outputs to become open state
4	VCC	P	Power supply
5	IN4A	I	It combines IN4A to decide the state of the constant current driver4
6	IN4B	I	It combines IN4B to decide the state of the constant voltage driver4
7	IN5A	I	It combines IN5A to decide the state of the constant current driver5
8	IN5B	I	It combines IN5B to decide the state of the constant current driver5
9	RFG	O	Voltage for current limit control of the constant current driver5
10	OUT5A	O	H-bridge output terminal 5A of the constant voltage driver5
11	OUT5B	P	H-bridge output terminal 5B of the constant voltage driver5
12	VM3	P	Power supply for channel 5
13	OUT4A	O	H-bridge output terminal 4A of the constant voltage driver4
14	OUT4B	O	H-bridge output terminal 4B of the constant voltage driver4
15	VM2	P	Power supply for channel3, 4
16	OUT3A	O	H-bridge output terminal 3A of the constant voltage driver3
17	OUT3B	O	H-bridge output terminal 3B of the constant voltage driver3
18	IN1A	I	It combines IN1A to decide the state of the constant voltage driver1
19	IN1B	I	It combines IN1B to decide the state of the constant voltage driver1
20	IN2A	I	It combines IN2A to decide the state of the constant voltage driver2
21	IN2B	I	It combines IN2B to decide the state of the constant voltage driver2
22	IN3A	I	It combines IN3A to decide the state of the constant voltage driver3
23	IN3B	I	It combines IN3B to decide the state of the constant voltage driver3
24	OUT2A	O	H-bridge output terminal 2A of the constant voltage driver2
25	OUT2B	O	H-bridge output terminal 2B of the constant voltage driver2
26	VM1	P	Power supply for channel 1, 2
27	OUT1A	O	H-bridge output terminal 1A of the constant voltage driver1
28	OUT1B	O	H-bridge output terminal 1B of the constant voltage driver1
29	AGND	G	GND
30	VC12	I	It is used to control the output voltage of constant voltage driver1, 2
31	VC3	I	It is used to control the output voltage of constant voltage driver3
32	VC4	I	It is used to control the output voltage of constant voltage driver4
Bottom	PGND1, 2	G	GND

Absolute Maximum Ratings

Item	Symbol	Ratings	Unit
Supply voltage VCC	VCC	+6.0	V
Supply voltage VM	VM	+6.0	V
Control input voltage	VIN	VCC	V
Power dissipation	Pd	1000	mW
Operating temperature	Topr	-20 ~ +85	° C
Junction temperature	Tj	~ +150	° C
Storage temperature range	Tstg	-55 ~ +150	° C
Maximum output current	Iout	800	mA
ESD Susceptibility *2	HBM	2	KV
	MM	200	V

1. **Stresses beyond those listed under "Absolute Maximum Ratings" may cause permanent damage to the device. These are stress ratings only, and functional operation of the device at these or any other conditions beyond those indicated in the operational sections of the specifications is not implied. Exposure to absolute maximum rating conditions for extended periods may affect device reliability.**
2. **Device are ESD sensitive. Handling precaution recommended. The Human Body model is a 100pF capacitor discharged through a 1.5KΩ resistor into each pin.**

Recommended Operating Conditions(Ta=25°C)

Item	Symbol	Ratings	Unit
Supply voltage VCC	VCC	+2.5 ~ +5.5	V
Supply voltage VM1,2,3	VM1,2,3	+1.9 ~ +5.5	V
Control input voltage	VIN	0 ~ VCC	V
H Bridge output current	Iout	-400 ~ +400	mA
Logic input frequency	Fin	0 ~ 100	kHz

Electrical Characteristic

(Ta=25 °C , VCC=3.0V, VM1=VM2=VM3=5V, $R_{L1} = R_{L2} = R_{L3} = R_{L4} 15\Omega$, $R_{L5} = 10\Omega$)

Parameter	Symbol	Condition	Values			Unit
			Min.	Typ.	Max.	
Whole circuits						
Circuit current1 at standby	ICCST	PS=L	-	1	10	μA
Circuit current1 at standby	IVMST	PS=L	-	1	10	μA
Circuit current1	ICC1	PS=H, IN1A1B~5A5B=L	-	0.6	1.5	mA
Circuit current2	ICC2	PS=H, IN1A or IN1B or IN2A or IN2B=H	-	1.0	1.5	mA
Circuit current3	ICC3	PS=H, IN3A or IN3B or IN4A or IN4B=H	-	1.0	1.5	mA
Circuit current4	ICC4	PS=H, IN5A or IN5B=H	-	1.0	1.5	mA
Circuit current5	ICC5	PS=H,IN1A=IN2A=IN3A=IN4A =IN5A=H or IN1B=IN2B=IN3B=IN4B=IN5B =H	-	1.0	1.5	mA
Power save						
H level input voltage	VPSH		2.0	-	-	V
L level input voltage	VPSL		-	-	0.8	V
H level input bias current	IPSH	PS=3V	-	5	20	μA
L level input bias current	IPSL	PS=0V	-1	0	-	μA
Pull-down resistance	RIN		-	1.5	-	MΩ
Control input						
H level input voltage	VINH		2.0	-	-	V
L level input voltage	VINL		-	-	0.8	V
H level input bias current	IINH	VIN=3V	-	5	20	μA
L level input bias current	IINL	VIN=0V	-1	0	-	μA
Pull-down resistance	RIN		-	1.5	-	MΩ
UVLO						
UVLO voltage	VUVLO		1.8	2.0	2.2	V
Vref						
VREF output voltage	VREF	Iout=0 ~ 1mA	0.98	1.00	1.02	V
Constant voltage driver1, 2						
Output ON Resistance	RON	Io=+-200mA, Sum of on-resistance		1.20	1.75	Ω
Output constant voltage	VO1	VC12=0.3V, Rload=7.5Ω	1.40	1.50	1.60	V

Constant voltage driver3, 4						
Output ON Resistance	RON	Io=+-200mA, Sum of on-resistance		1.20	1.75	Ω
Output constant voltage	VO2	VC3=VC4=0.3V, Rload=7.5Ω	1.40	1.50	1.60	V
Constant current driver5						
Output ON Resistance	RON	Io=+-300mA, Sum of on-resistance	-	1.00	1.45	Ω
Output Limit voltage	VOL	RFG=1Ω, VC5=0.3V	287	300	313	mV
Thermal Protection Circuit						
Protection Temperature	TSD			150		°C

Input-output logic table

Constant-voltage or saturation control (Channel 1, 2)

Input				Output				Mode
IN1A	IN1B	IN2A	IN2B	OUT1A	OUT1B	OUT2A	OUT2B	
L	L	L	L	Z	Z	Z	Z	Standby
H	L	L	L	H	L	Z	Z	1,2 phase excitation
H	L	H	L	H	L	H	L	
L	L	H	L	Z	Z	H	L	
L	H	H	L	L	H	H	L	
L	H	L	L	L	H	Z	Z	
L	H	L	H	L	H	L	H	
L	L	L	H	Z	Z	L	H	
H	L	L	H	H	L	L	H	
H	H			L	L			BRAKE
		H	H			L	L	

Constant-voltage or saturation control (Channel 3, 4)

Input				Output				Mode
IN3A	IN3B	IN4A	IN4B	OUT3A	OUT3B	OUT4A	OUT4B	
L	L	L	L	Z	Z	Z	Z	Standby
H	L	L	L	H	L	Z	Z	1,2 phase excitation
H	L	H	L	H	L	H	L	
L	L	H	L	Z	Z	H	L	
L	H	H	L	L	H	H	L	
L	H	L	L	L	H	Z	Z	
L	H	L	H	L	H	L	H	
L	L	L	H	Z	Z	L	H	
H	L	L	H	H	L	L	H	
H	H			L	L			BRAKE
		H	H			L	L	

Constant-current control or saturation control (Channel 5)

Input		Output		Mode
IN5A	IN5B	OUT5A	OUT5B	
L	L	Z	Z	Standby
H	L	H	L	SH&AE
L	H	L	H	
H	H	L	L	BRAKE

Application reference 1

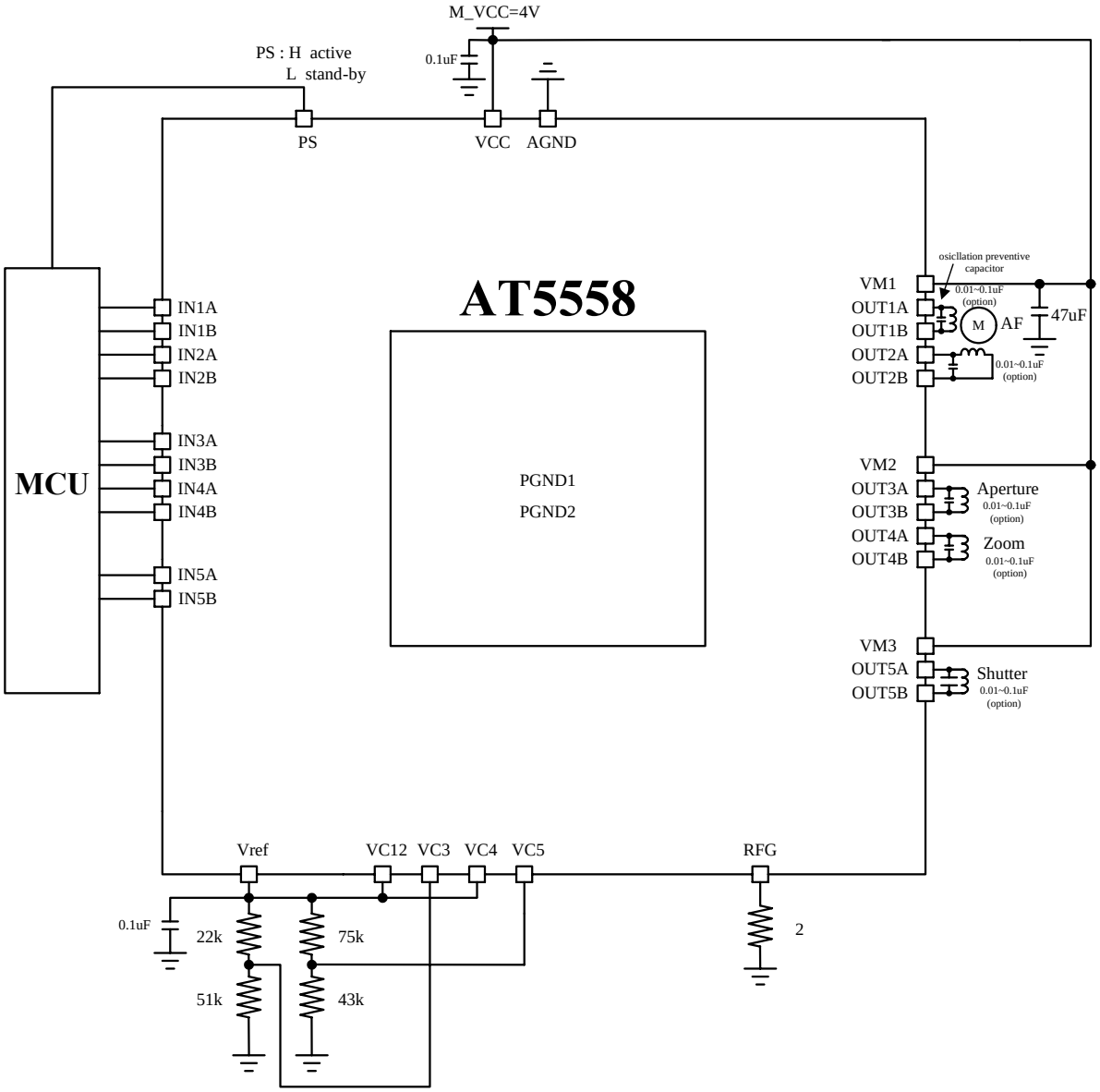

Saturation mode ：**CH1&CH2&CH4** $\rightarrow V_{Oi} = VM - R_{ON} \times I_{Oi}$, $i = 1,2,4$

Constant voltage ：**CH3**$\rightarrow V_{O3} = V_{C3} \times 5 - 0.5 \times R_{ON} \times I_{O3}$

Constant current：**CH5**$\rightarrow I_{O5} = V_{C5} / RFG$

Application reference 2

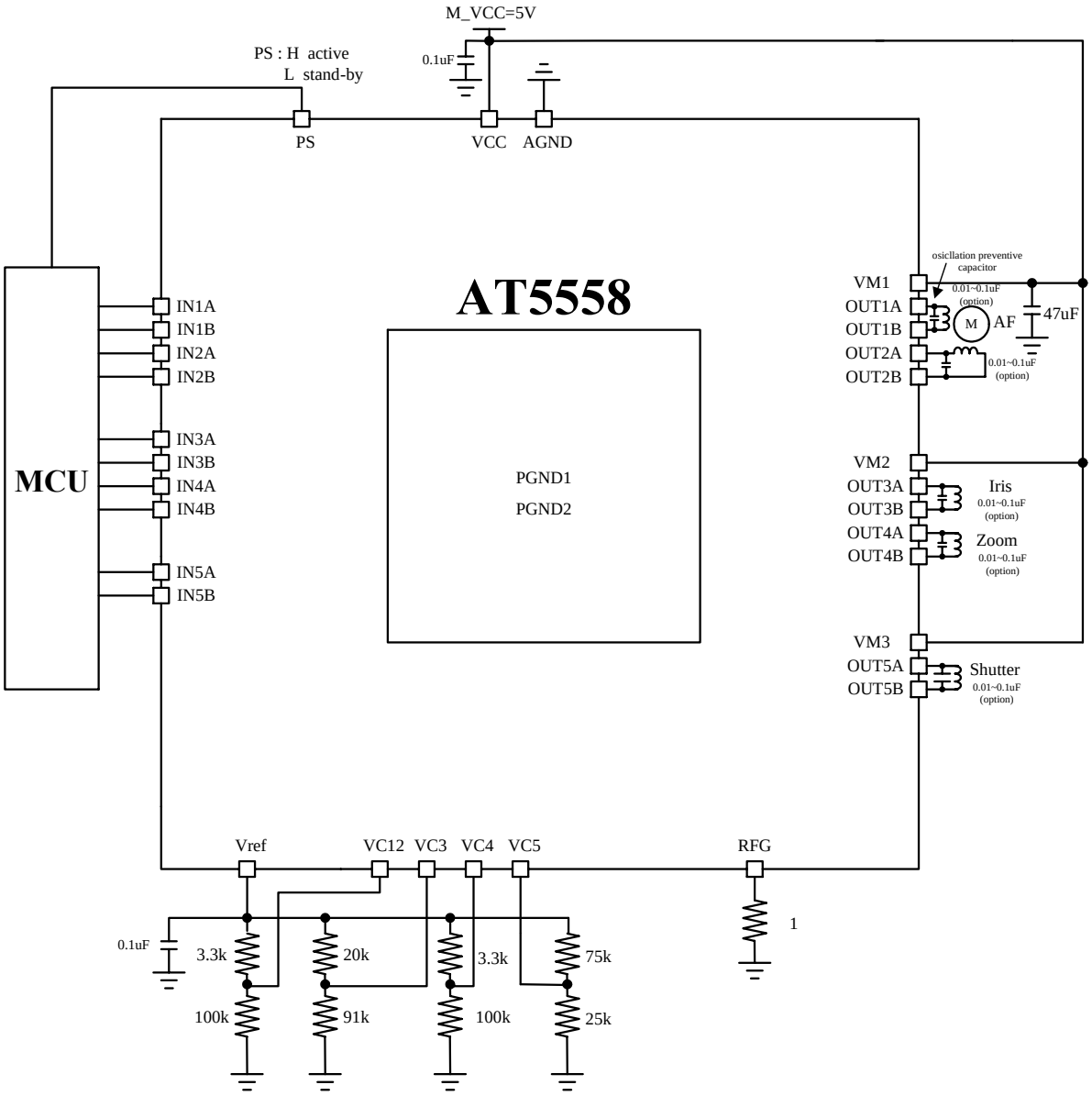

Constant voltage ：**CH1&CH2**→$V_{Oi} = V_{C12} \times 5 - 0.5 \times R_{ON} \times I_{Oi}$, $i = 1,2$

CH3&CH4→$V_{Oi} = V_{Ci} \times 5 - 0.5 \times R_{ON} \times I_{Oi}$, $i = 3,4$

Constant current：**CH5**→$I_{O5} = V_{C5} / RFG$

Application reference 3

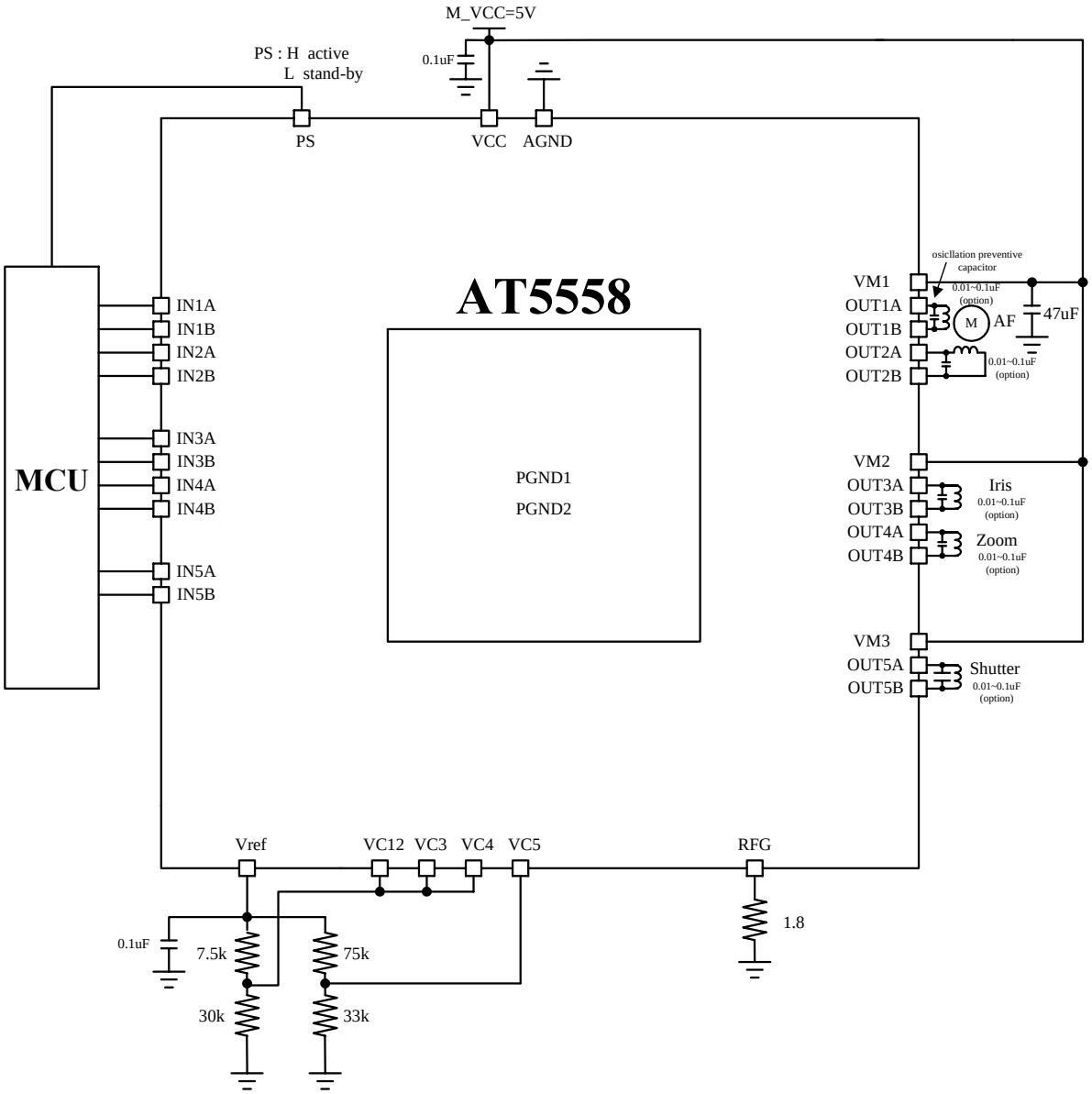

Constant voltage ：**CH1&CH2**→$V_{Oi} = V_{C12} \times 5 - 0.5 \times R_{ON} \times I_{Oi}$, $i = 1,2$

CH3&CH4→$V_{Oi} = V_{Ci} \times 5 - 0.5 \times R_{ON} \times I_{Oi}$, $i = 3,4$

Constant current：**CH5**→$I_{O5} = V_{C5} / RFG$

PC Board layout

1. Due to PGND1 and PGND2 are bound to the bottom of the package, it should be noted that the bottom must be laid together with GND.
2. On the PCB, a hole should be placed in the location of the package bottom for debug issue.

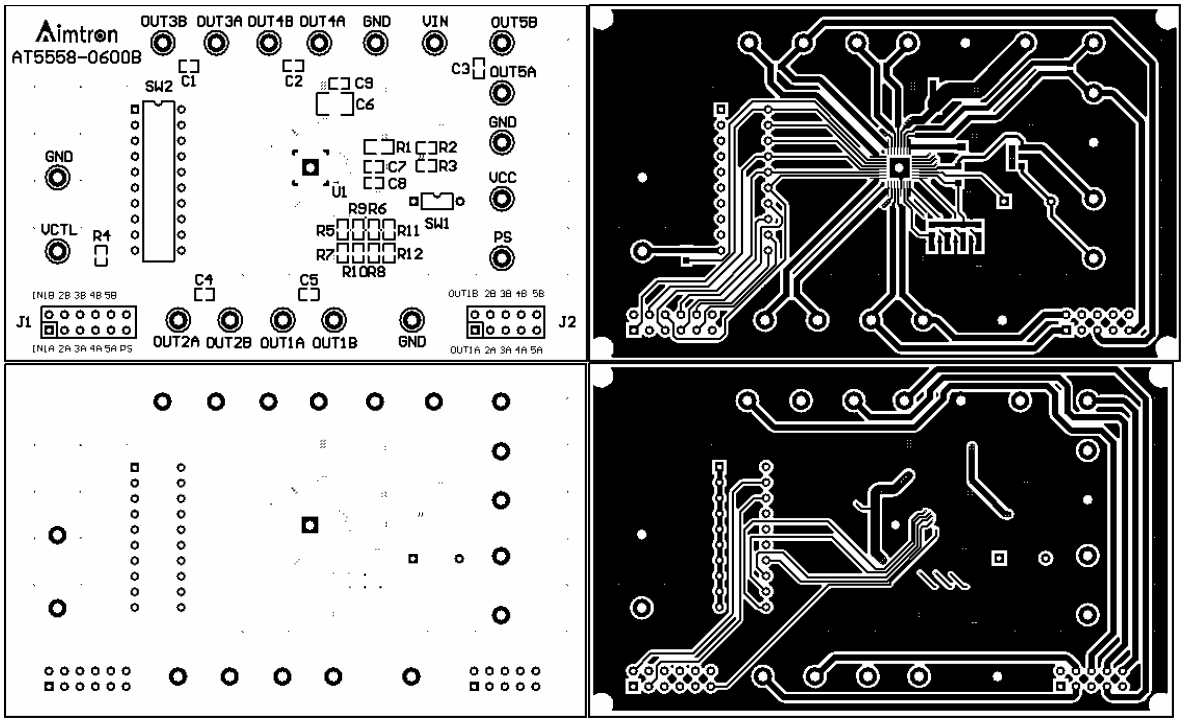

Package Description
QFN32

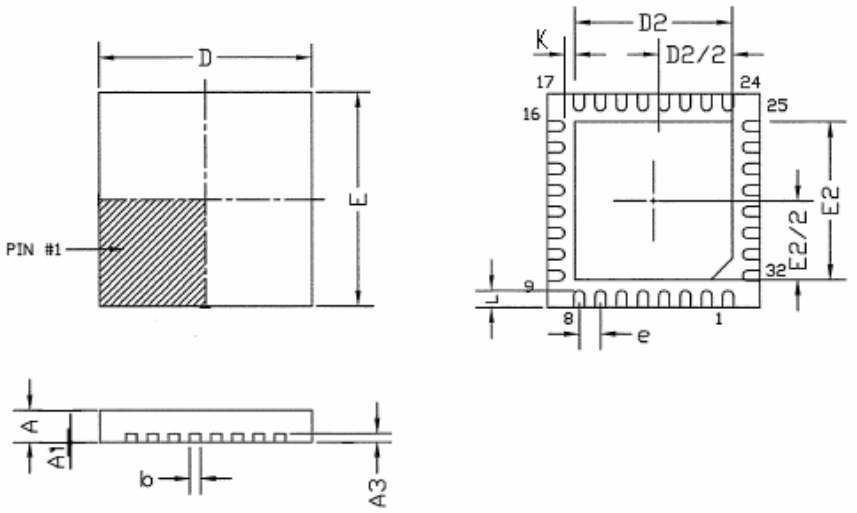

SYMBOL	DIMENSION (MM)			DIMENSION (MIL)		
	MIN.	NOM.	MAX.	MIN.	NOM.	MAX.
A	0.70	0.75	0.80	27.6	29.5	31.5
A1	0	0.02	0.05	0	0.79	1.97
A3	0.2 REF			7.9 REF		
b	0.18	0.25	0.30	7.1	9.8	11.8
D	4.90	5.00	5.10	193	197	201
D2	1.25	2.70	3.70	49	106	146
E	4.90	5.00	5.10	193	197	201
E2	1.25	2.70	3.70	49	106	146
e	0.50 BSC			19.7 BSC		
k	0.2	-	-	7.9	-	-
L	0.3	0.4	0.5	11.8	15.7	19.7

Reflow Profiles

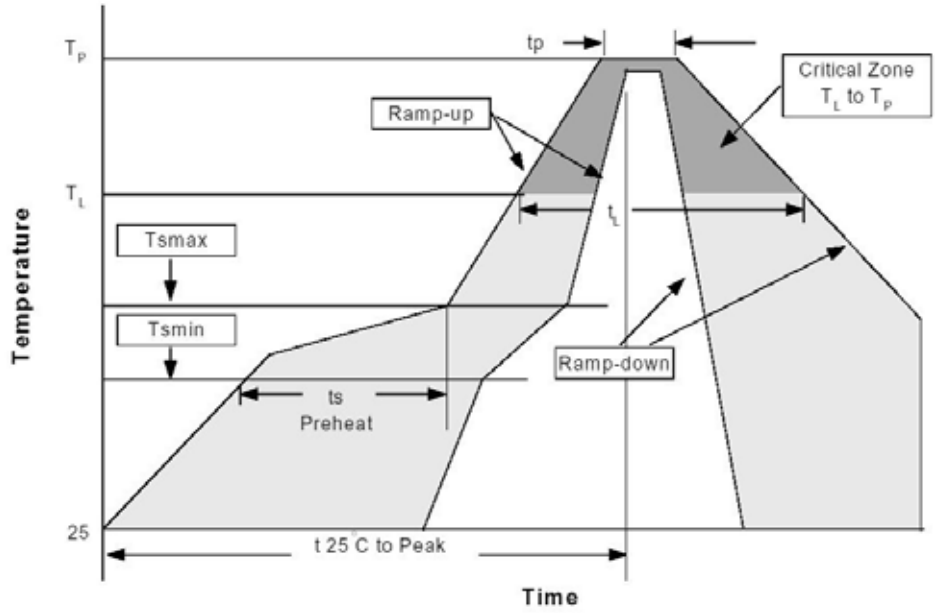

Profile Feature	Sn-Pb Eutectic Assembly		Pb-Free Assembly	
	Large Body Pkg. thickness ≥2.5mm or Pkg. volume ≥350mm^3	**Small Body Pkg. thickness <2.5mm or Pkg. volume <350mm^3**	**Large Body Pkg. thickness ≥2.5mm or Pkg. volume ≥350mm^3**	**Small Body Pkg. thickness ≥2.5mm or Pkg. volume ≥350mm^3**
Average ramp-up rate (T_L to T_P)	3°C/second max.		3°C/second max.	
Preheat -Temperature Min(Tsmin) -Temperature Max (Tsmax) -Time (min to max)(ts)	 100°C 150°C 60-120 seconds		 150°C 200°C 60-180 seconds	
Tsmax to T_L -Ramp-up Rate			3°C/second max.	
Time maintained above: -Temperature (T_L) -Time (t_L)	 183°C 60-150 seconds		 217°C 60-150 seconds	
Peak Temperature(T_P)	225+0/-5°C	240+0/-5°C	245+0/-5°C	250+0/-5°C
Time within 5°C of actual Peak Temperature (t_P)	10-30 seconds	10-30 seconds	10-30 seconds	20-40 seconds
Ramp-down Rate	6°C/second max.		3°C/second max.	
Time 25°C to Peak Temperature	6 minutes max.		8 minutes max.	

***All temperatures refer to topside of the package, measured on the package body surface.**