Features

- **Single Supply for Read and Write: 2.7V to 3.6V (BV), 3.0V to 3.6V (LV)**
- **Fast Read Access Time - 120 ns**
- **Internal Program Control and Timer**
- **16K bytes Boot Block With Lockout**
- **Fast Erase Cycle Time - 10 seconds**
- **Byte-By-Byte Programming - 30 µs/Byte Typical**
- **Hardware Data Protection**
- **DATA Polling For End Of Program Detection**
- **Low Power Dissipation**
  - **25 mA Active Current**
  - **50 µA CMOS Standby Current**
- **Typical 10,000 Write Cycles**
- **Small Packaging**
  - **8 x 14 mm CBGA**

Description

The AT49BV/LV080 are 3-volt-only in-system Flash Memory devices. Their 8 megabits of memory are organized as 1,024,576 words by 8 bits. Manufactured with Atmel's advanced nonvolatile CMOS technology, the devices offer access times to 120 ns with power dissipation of just 90 mW over the commercial temperature range. When the device is deselected, the CMOS standby current is less than 50 µA.

The device contains a user-enabled "boot block" protection feature. Two versions of the feature are available: the AT49BV/LV080 locates the boot block at lowest order addresses ("bottom boot"); the AT49BVLV080T locates it at highest order addresses ("top boot").

(continued)

Pin Configurations

Pin Name	Function
A0 - A19	Addresses
$\overline{CE}$	Chip Enable
$\overline{OE}$	Output Enable
$\overline{WE}$	Write Enable
$\overline{RESET}$	Reset
RDY/$\overline{BUSY}$	Ready/$\overline{Busy}$ Output
I/O0 - I/O7	Data Inputs/Outputs

TSOP Top View
Type 1

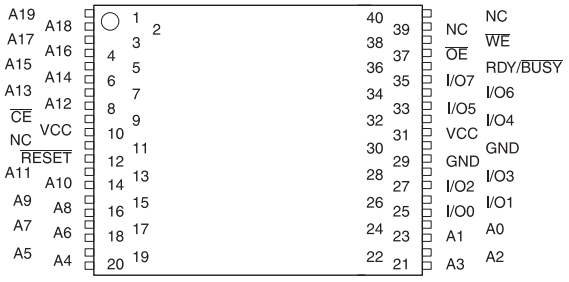

CBGA Top View

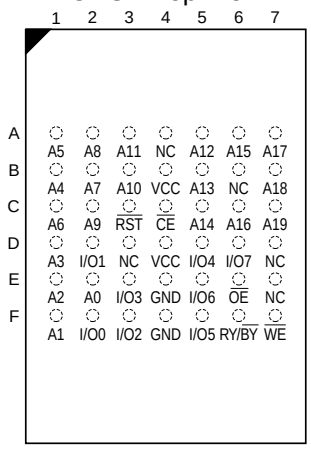

SOIC

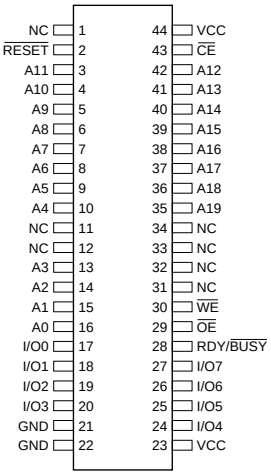

8-Megabit (1M x 8) Single 2.7-volt *Battery-Voltage*™ Flash Memory

AT49BV080
AT49BV080T
AT49LV080
AT49LV080T

0812A–8/97

Description (Continued)

To allow for simple in-system reprogrammability, the AT49BV/LV080 does not require high input voltages for programming. 3-volt-only commands determine the read and programming operation of the device. Reading data out of the device is similar to reading from an EPROM. Reprogramming the AT49BV/LV080 is performed by erasing the entire 8 megabits of memory and then programming on a byte-by-byte basis. The typical byte programming time is a fast 30 µs. The end of a program cycle can be optionally detected by the DATA polling feature. Once the end of a byte program cycle has been detected, a new access for a read or program can begin. The typical number of program and erase cycles is in excess of 10,000 cycles.

The optional 16K bytes boot block section includes a reprogramming write lock out feature to provide data integrity. The boot sector is designed to contain user secure code, and when the feature is enabled, the boot sector is permanently protected from being reprogrammed.

Block Diagram

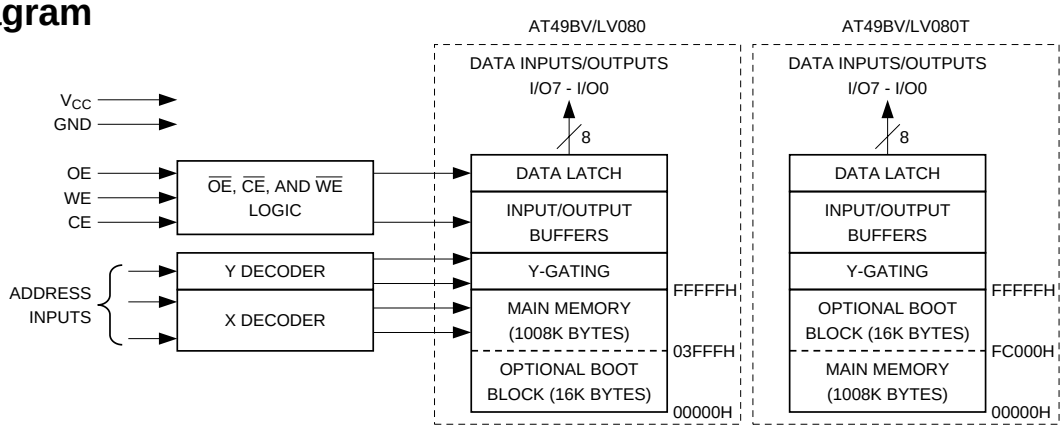

Device Operation

READ: The AT49BV/LV080 is accessed like an EPROM. When CE and OE are low and WE is high, the data stored at the memory location determined by the address pins is asserted on the outputs. The outputs are put in the high impedance state whenever CE or OE is high. This dual-line control gives designers flexibility in preventing bus contention.

ERASURE: Before a byte can be reprogrammed, the 1024K bytes memory array (or 1008K bytes if the boot block featured is used) must be erased. The erased state of the memory bits is a logical "1". The entire device can be erased at one time by using a 6-byte software code. The software chip erase code consists of 6-byte load commands to specific address locations with a specific data pattern (please refer to the Chip Erase Cycle Waveforms).

After the software chip erase has been initiated, the device will internally time the erase operation so that no external clocks are required. The maximum time needed to erase the whole chip is t_{EC}. If the boot block lockout feature has been enabled, the data in the boot sector will not be erased.

BYTE PROGRAMMING: Once the memory array is erased, the device is programmed (to a logical "0") on a byte-by-byte basis. Please note that a data "0" cannot be programmed back to a "1"; only erase operations can convert "0"s to "1"s. Programming is accomplished via the internal device command register and is a 4 bus cycle operation (please refer to the Command Definitions table). The device will automatically generate the required internal program pulses.

The program cycle has addresses latched on the falling edge of WE or CE, whichever occurs last, and the data latched on the rising edge of WE or CE, whichever occurs first. Programming is completed after the specified t_{BP} cycle time. The DATA polling feature may also be used to indicate the end of a program cycle.

BOOT BLOCK PROGRAMMING LOCKOUT: The device has one designated block that has a programming lockout feature. This feature prevents programming of data in the designated block once the feature has been enabled. The size of the block is 16K bytes. This block, referred to as the boot block, can contain secure code that is used to bring up the system. Enabling the lockout feature will allow the boot code to stay in the device while data in the rest of the device is updated. This feature does not have to be activated; the boot block's usage as a write protected region is optional to the user. The address range of the AT49BV/LV080 boot block is 00000H to 03FFFH while the address range of the AT49BV/LV080T boot block is FC000H to FFFFFH.

To activate the lockout feature, a series of six program commands to specific addresses with specific data must

Device Operation (Continued)

be performed. Please refer to the Command Definitions table.

BOOT BLOCK LOCKOUT DETECTION: A software method is available to determine if programming of the boot block section is locked out. When the device is in the software product identification mode (see Software Product Identification Entry and Exit sections) a read from address location 00002H will show if programming the boot block is locked out. If the data on I/O0 is low, the boot block can be programmed; if the data on I/O0 is high, the program lockout feature has been activated and the block cannot be programmed. The software product identification exit code should be used to return to standard operation.

BOOT BLOCK PROGRAMMING LOCKOUT OVERRIDE: The user can override the boot block programming lockout by taking the $\overline{\text{RESET}}$ pin to 12 ± 0.5 volts. By doing this, protected boot block data can be altered through a chip erase, or byte programming. When the $\overline{\text{RESET}}$ pin is brought back to TTL levels the boot block programming lockout feature is again active.

PRODUCT IDENTIFICATION: The product identification mode identifies the device and manufacturer as Atmel. It may be accessed by hardware or software operation. The hardware operation mode can be used by an external programmer to identify the correct programming algorithm for the Atmel product.

For details, see Operating Modes (for hardware operation) or Software Product Identification. The manufacturer and device code is the same for both modes.

DATA POLLING: The AT49BV/LV080 features $\overline{\text{DATA}}$ polling to indicate the end of a program cycle. During a program cycle an attempted read of the last byte loaded will result in the complement of the loaded data on I/O7. Once the program cycle has been completed, true data is valid on all outputs and the next cycle may begin. $\overline{\text{DATA}}$ polling may begin at any time during the program cycle.

TOGGLE BIT: In addition to $\overline{\text{DATA}}$ polling, the AT49BV/LV080 provides another method for determining the end of a program or erase cycle. During a program or erase operation, successive attempts to read data from the device will result in I/O6 toggling between one and zero. Once the program cycle has completed, I/O6 will stop toggling and valid data will be read. Examining the toggle bit may begin at any time during a program cycle.

RDY/$\overline{\text{BUSY}}$: An open drain READY/$\overline{\text{BUSY}}$ output pin provides another method of detecting the end of a program or erase operation. RDY/$\overline{\text{BUSY}}$ is actively pulled low during the internal program and erase cycles and is released at the completion of the cycle. The open drain connection allows for OR - tying of several devices to the same RDY/$\overline{\text{BUSY}}$ line.

RESET: A $\overline{\text{RESET}}$ input pin is provided to ease some system applications. When $\overline{\text{RESET}}$ is at a logic high level, the device is in its standard operating mode. A low level on the $\overline{\text{RESET}}$ input halts the present device operation and puts the outputs of the device in a high impedance state. If the $\overline{\text{RESET}}$ pin makes a high to low transition during a program or erase operation, the operation may not be successfully completed, and the operation will have to be repeated after a high level is applied to the $\overline{\text{RESET}}$ pin. When a high level is reasserted on the $\overline{\text{RESET}}$ pin, the device returns to the read or standby mode, depending upon the state of the control inputs. By applying a 12V ± 0.5V input signal to the $\overline{\text{RESET}}$ pin the boot block array can be reprogrammed even if the boot block lockout feature has been enabled (see Boot Block Programming Lockout Override section).

HARDWARE DATA PROTECTION: Hardware features protect against inadvertent programs to the AT49BV/LV080 in the following ways: (a) V_{CC} sense: if V_{CC} is below 1.8V (typical), the program function is inhibited. (b) Program inhibit: holding any one of $\overline{\text{OE}}$ low, $\overline{\text{CE}}$ high or $\overline{\text{WE}}$ high inhibits program cycles. (c) Noise filter: pulses of less than 15 ns (typical) on the $\overline{\text{WE}}$ or $\overline{\text{CE}}$ inputs will not initiate a program cycle.

Command Definition (in Hex)

Command Sequence	Bus Cycles	1st Bus Cycle		2nd Bus Cycle		3rd Bus Cycle		4th Bus Cycle		5th Bus Cycle		6th Bus Cycle	
		Addr	Data	Addr	Data	Addr	Data	Addr	Data	Addr	Data	Addr	Data
Read	1	Addr	D_{OUT}										
Chip Erase	6	5555	AA	2AAA	55	5555	80	5555	AA	2AAA	55	5555	10
Byte Program	4	5555	AA	2AAA	55	5555	A0	Addr	D_{IN}				
Boot Block Lockout (1)	6	5555	AA	2AAA	55	5555	80	5555	AA	2AAA	55	5555	40
Product ID Entry	3	5555	AA	2AAA	55	5555	90						
Product ID Exit (2)	3	5555	AA	2AAA	55	5555	F0						
Product ID Exit (2)	1	XXXX	F0										

Notes: 1. The 16K byte boot sector has the address range 00000H to 03FFFH for the AT49BV/LV080 and FC000H to FFFFFH for the AT49BV/LV080T.
2. Either one of the Product ID Exit commands can be used.

Absolute Maximum Ratings*

Temperature Under Bias	-55°C to +125°C
Storage Temperature	-65°C to +150°C
All Input Voltages (including NC Pins) with Respect to Ground	-0.6V to +6.25V
All Output Voltages with Respect to Ground	-0.6V to V_{CC} + 0.6V
Voltage on $\overline{OE}$ with Respect to Ground	-0.6V to +13.5V

*NOTICE: Stresses beyond those listed under “Absolute Maximum Ratings” may cause permanent damage to the device. This is a stress rating only and functional operation of the device at these or any other conditions beyond those indicated in the operational sections of this specification is not implied. Exposure to absolute maximum rating conditions for extended periods may affect device reliability.

DC and AC Operating Range

		AT49BV/LV080-12	AT49BV/LV080-15	AT49BV/LV080-20
Operating Temperature (Case)	Com.	0°C - 70°C	0°C - 70°C	0°C - 70°C
	Ind.	-40°C - 85°C	-40°C - 85°C	-40°C - 85°C
V_{CC} Power Supply		2.7V - 3.6V / 3.0V - 3.6V	2.7V - 3.6V / 3.0V - 3.6V	2.7V - 3.6V / 3.0V - 3.6V

Operating Modes

Mode	$\overline{CE}$	$\overline{OE}$	$\overline{WE}$	$\overline{RESET}$	Ai	I/O	RDY/$\overline{BUSY}$
Read	V_{IL}	V_{IL}	V_{IH}	V_{IH}	Ai	D_{OUT}	V_{OH}
Program (2)	V_{IL}	V_{IH}	V_{IL}	V_{IH}	Ai	D_{IN}	V_{OL}
Standby/Write Inhibit	V_{IH}	X (1)	X	V_{IH}	X	High Z	V_{OH}
Program Inhibit	X	X	V_{IH}	V_{IH}			V_{OH}
Program Inhibit	X	V_{IL}	X	V_{IH}			V_{OH}
Output Disable	X	V_{IH}	X	V_{IH}		High Z	V_{OH}
RESET	X	X	X	V_{IL}	X	High Z	
Product Identification							
Hardware	V_{IL}	V_{IL}	V_{IH}	V_{IH}	A1 - A19 = V_{IL}, A9 = V_H, (3) A0 = V_{IL}	Manufacturer Code (4)	
					A1 - A19 = V_{IL}, A9 = V_H, (3) A0 = V_{IH}	Device Code (4)	
Software (5)					A0 = V_{IL}, A1 - A19 = V_{IL}	Manufacturer Code (4)	
					A0 = V_{IH}, A1 - A19 = V_{IL}	Device Code (4)	

Notes: 1. X can be V_{IL} or V_{IH}.
2. Refer to AC Programming Waveforms.
3. V_H = 12.0V ± 0.5V.
4. Manufacturer Code: 1FH, Device Code: 23H (AT49BV/LV080), 27H (AT49BV/LV080T)
5. See details under Software Product Identification Entry/Exit.

DC Characteristics

Symbol	Parameter	Condition	Min	Max	Units
I_{LI}	Input Load Current	V_{IN} = 0V to V_{CC}		1	µA
I_{LO}	Output Leakage Current	$V_{I/O}$ = 0V to V_{CC}		1	µA
I_{SB1}	V_{CC} Standby Current CMOS	$\overline{CE}$ = V_{CC} - 0.3V to V_{CC}		50	µA
I_{SB2}	V_{CC} Standby Current TTL	$\overline{CE}$ = 2.0V to V_{CC}		1	mA
I_{CC} (1)	V_{CC} Active Current	f = 5 MHz; I_{OUT} = 0 mA, V_{CC} = 3.6V		25	mA
V_{IL}	Input Low Voltage			0.6	V
V_{IH}	Input High Voltage		2.0		V
V_{OL}	Output Low Voltage	I_{OL} = 1.6 mA, V_{CC} = 3.0V		0.45	V
V_{OH}	Output High Voltage	I_{OH} = -100 µA, V_{CC} = 3.0V	2.4		V

Note: 1. I_{CC} in the erase mode is 50 mA.

AC Read Characteristics

Symbol	Parameter	AT49BV/LV080-12		AT49BV/LV080-15		AT49BV/LV080-20		Units
		Min	Max	Min	Max	Min	Max	
t_{ACC}	Address to Output Delay		120		150		200	ns
t_{CE} (1)	$\overline{CE}$ to Output Delay		120		150		200	ns
t_{OE} (2)	$\overline{OE}$ to Output Delay	0	50	0	70	0	100	ns
t_{DF} (3, 4)	$\overline{CE}$ or $\overline{OE}$ to Output Float	0	30	0	40	0	50	ns
t_{OH}	Output Hold from $\overline{OE}$, $\overline{CE}$ or Address, whichever occurred first	0		0		0		ns

AC Read Waveforms (1,2,3,4)

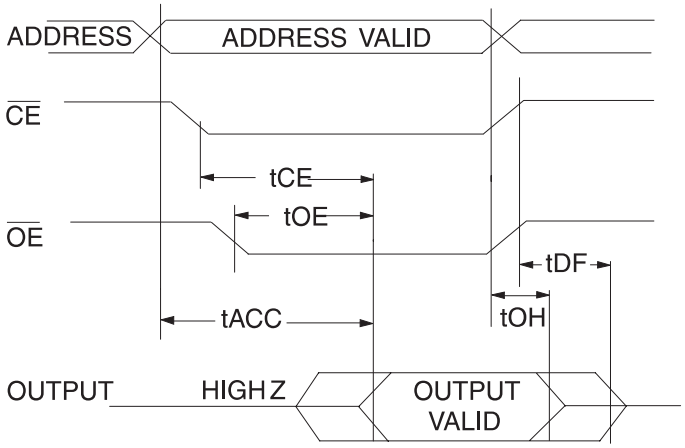

Notes: 1. $\overline{CE}$ may be delayed up to $t_{ACC} - t_{CE}$ after the address transition without impact on t_{ACC}.
2. $\overline{OE}$ may be delayed up to $t_{CE} - t_{OE}$ after the falling edge of $\overline{CE}$ without impact on t_{CE} or by $t_{ACC} - t_{OE}$ after an address change without impact on t_{ACC}.
3. t_{DF} is specified from $\overline{OE}$ or $\overline{CE}$ whichever occurs first (C_L = 5 pF).
4. This parameter is characterized and is not 100% tested.

Input Test Waveforms and Measurement Level

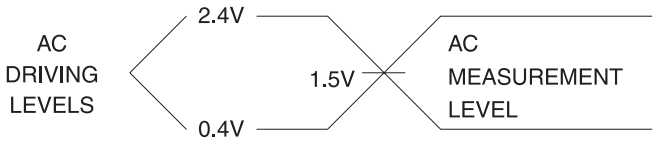

t_R, t_F < 5 ns

Output Test Load

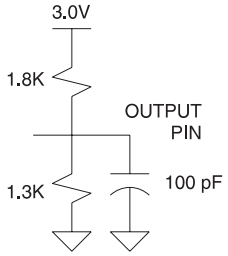

Pin Capacitance (f = 1 MHz, T = 25°C) (1)

	Typ	Max	Units	Conditions
C_{IN}	4	6	pF	V_{IN} = 0V
C_{OUT}	8	12	pF	V_{OUT} = 0V

Note: 1. This parameter is characterized and is not 100% tested.

AC Byte Load Characteristics

Symbol	Parameter	Min	Max	Units
t_{AS}, t_{OES}	Address, $\overline{OE}$ Set-up Time	0		ns
t_{AH}	Address Hold Time	100		ns
t_{CS}	Chip Select Set-up Time	0		ns
t_{CH}	Chip Select Hold Time	0		ns
t_{WP}	Write Pulse Width ($\overline{WE}$ or $\overline{CE}$)	200		ns
t_{DS}	Data Set-up Time	100		ns
t_{DH}, t_{OEH}	Data, $\overline{OE}$ Hold Time	0		ns
t_{WPH}	Write Pulse Width High	200		ns

AC Byte Load Waveforms

$\overline{WE}$ Controlled

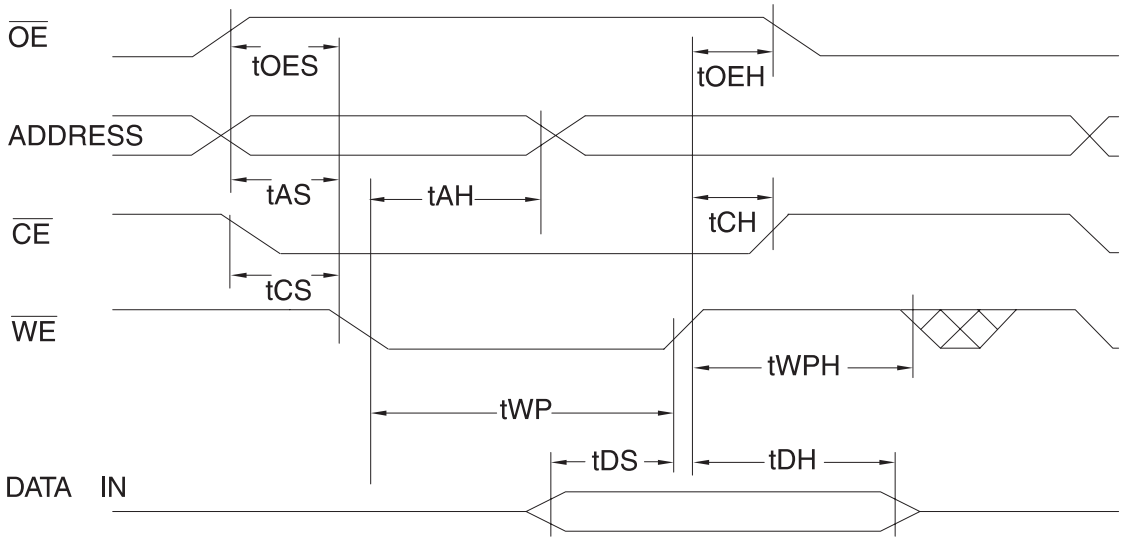

$\overline{CE}$ Controlled

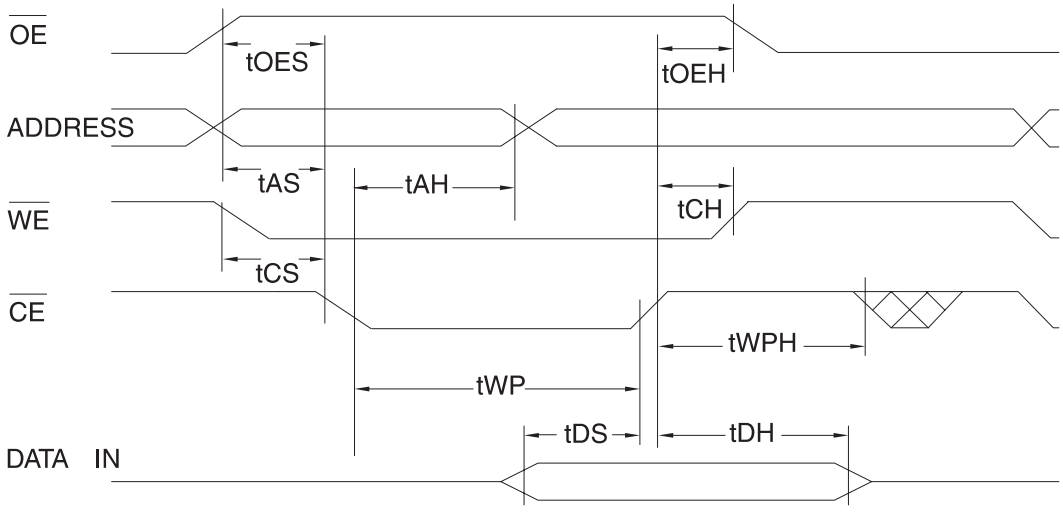

Program Cycle Characteristics

Symbol	Parameter	Min	Typ	Max	Units
t_{BP}	Byte Programming Time		30	50	µs
t_{AS}	Address Set-up Time	0			ns
t_{AH}	Address Hold Time	100			ns
t_{DS}	Data Set-up Time	100			ns
t_{DH}	Data Hold Time	0			ns
t_{WP}	Write Pulse Width	200			ns
t_{WPH}	Write Pulse Width High	200			ns
t_{EC}	Erase Cycle Time			10	seconds

Program Cycle Waveforms

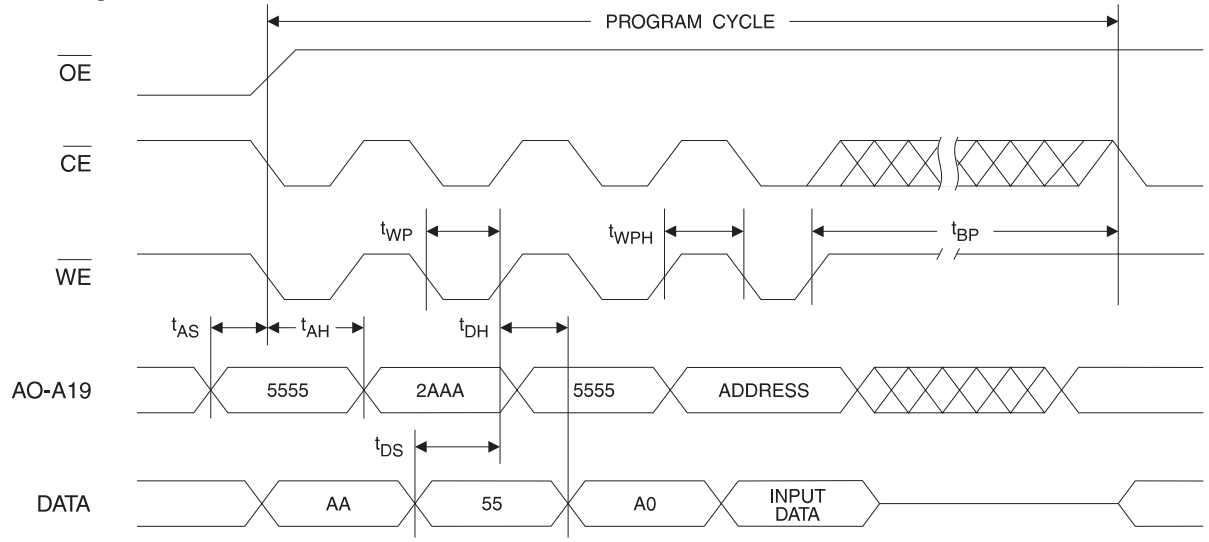

Chip Erase Cycle Waveforms

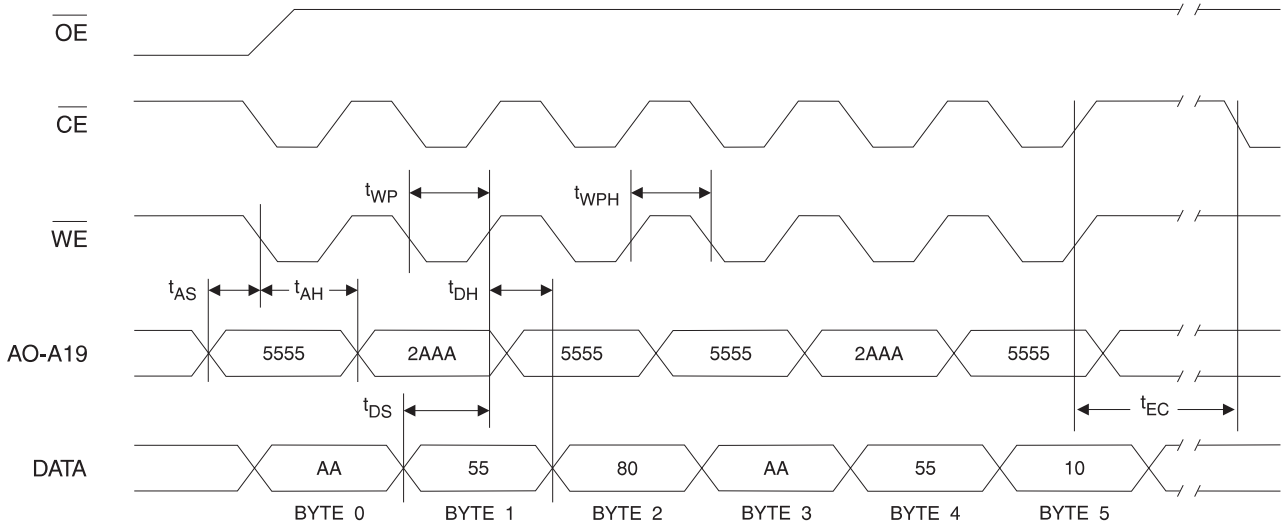

Note: $\overline{OE}$ must be high only when $\overline{WE}$ and $\overline{CE}$ are both low.

$\overline{\text{Data}}$ Polling Characteristics (1)

Symbol	Parameter	Min	Typ	Max	Units
t_{DH}	Data Hold Time	10			ns
t_{OEH}	$\overline{OE}$ Hold Time	10			ns
t_{OE}	$\overline{OE}$ to Output Delay (2)				ns
t_{WR}	Write Recovery Time	0			ns

Notes: 1. These parameters are characterized and not 100% tested.
2. See t_{OE} spec in AC Read Characteristics.

$\overline{\text{Data}}$ Polling Waveforms

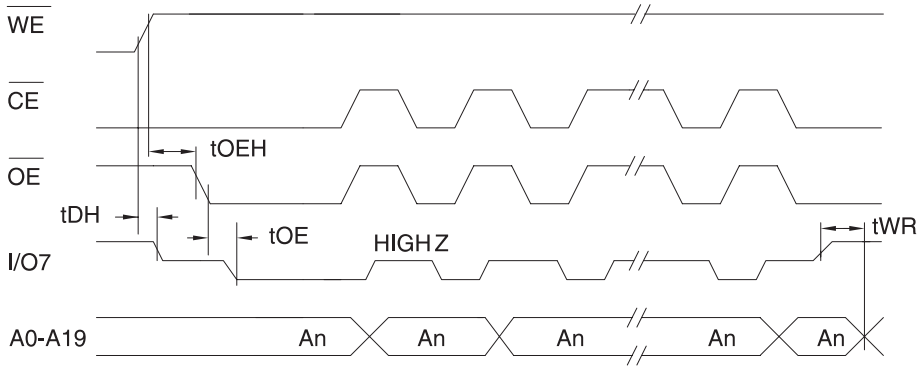

Toggle Bit Characteristics (1)

Symbol	Parameter	Min	Typ	Max	Units
t_{DH}	Data Hold Time	10			ns
t_{OEH}	$\overline{OE}$ Hold Time	10			ns
t_{OE}	$\overline{OE}$ to Output Delay (2)				ns
t_{OEHP}	$\overline{OE}$ High Pulse	150			ns
t_{WR}	Write Recovery Time	0			ns

Notes: 1. These parameters are characterized and not 100% tested.
2. See t_{OE} spec in AC Read Characteristics.

Toggle Bit Waveforms (1, 2, 3)

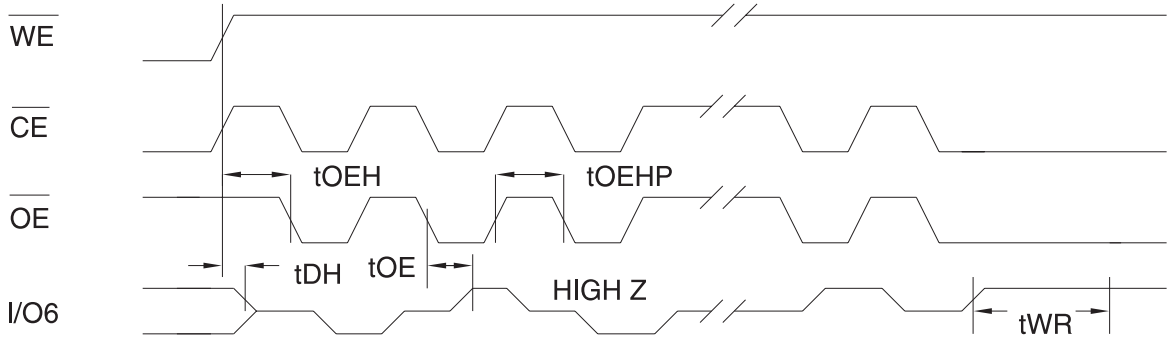

Notes: 1. Toggling either $\overline{OE}$ or $\overline{CE}$ or both $\overline{OE}$ and $\overline{CE}$ will operate toggle bit. The t_{OEHP} specification must be met by the toggling input(s).
2. Beginning and ending state of I/O6 will vary.
3. Any address location may be used but the address should not vary.

Software Product Identification Entry (1)

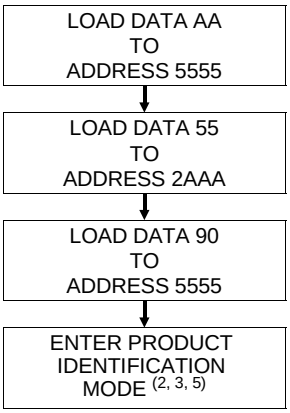

Software Product Identification Exit (1)

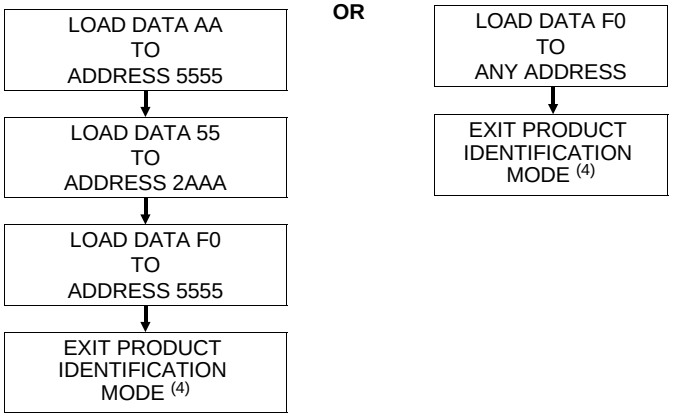

Notes for software product identification:
1. Data Format: I/O7 - I/O0 (Hex);
   Address Format: A14 - A0 (Hex).
2. A1 - A19 = V_{IL}.
   Manufacture Code is read for A0 = V_{IL};
   Device Code is read for A0 = V_{IH}.
3. The device does not remain in identification mode if powered down.
4. The device returns to standard operation mode.
5. Manufacturer Code: 1FH
   Device Code: 23H (AT49BV/LV080), 27H (AT49BV/LV080T)

Boot Block Lockout Feature Enable Algorithm (1)

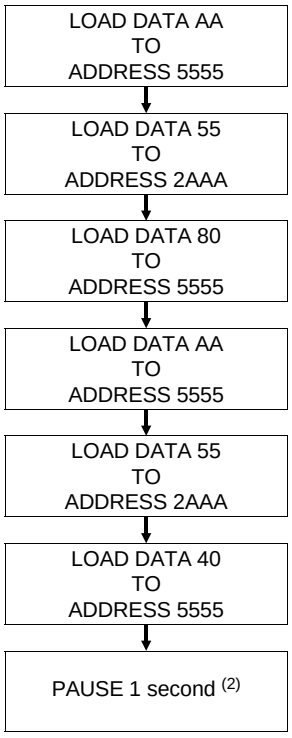

Notes for boot block lockout feature enable:
1. Data Format: I/O7 - I/O0 (Hex);
   Address Format: A14 - A0 (Hex).
2. Boot block lockout feature enabled.

Ordering Information

t_{ACC} (ns)	I_{CC} (mA)		Ordering Code	Package	Operation Range
	Active	Standby			
120	25	0.05	AT49BV080-12CC AT49BV080-12RC AT48BV080-12TC	42C2 44R 40T	Commercial (0° to 70°C)
	25	0.05	AT49BV080-12CI AT49BV080-12RI AT49BV080-12TI	42C2 44R 40T	Industrial (-40° to 85°C)
150	25	0.05	AT49BV080-15CC AT49BV080-15RC AT49BV080-15TC	42C2 44R 40T	Commercial (0° to 70°C)
	25	0.05	AT49BV080-15CI AT49BV080-15RI AT49BV080-15TI	42C2 44R 40T	Industrial (-40° to 85°C)
200	25	0.05	AT49BV080-20CC AT49BV080-20RC AT49BV080-20TC	42C2 44R 40T	Commercial (0° to 70°C)
	25	0.05	AT49BV080-20CI AT49BV080-20RI AT49BV080-20TI	42C2 44R 40T	Industrial (-40° to 85°C)
120	25	0.05	AT49BV080T-12CC AT49BV080T-12RC AT48BV080T-12TC	42C2 44R 40T	Commercial (0° to 70°C)
	25	0.05	AT49BV080T-12CI AT49BV080T-12RI AT49BV080T-12TI	42C2 44R 40T	Industrial (-40° to 85°C)
150	25	0.05	AT49BV080T-15CC AT49BV080T-15RC AT49BV080T-15TC	42C2 44R 40T	Commercial (0° to 70°C)
	25	0.05	AT49BV080T-15CI AT49BV080T-15RI AT49BV080T-15TI	42C2 44R 40T	Industrial (-40° to 85°C)
200	25	0.05	AT49BV080T-20CC AT49BV080T-20RC AT49BV080T-20TC	42C2 44R 40T	Commercial (0° to 70°C)
	25	0.05	AT49BV080T-20CI AT49BV080T-20RI AT49BV080T-20TI	42C2 44R 40T	Industrial (-40° to 85°C)

Package Type	
42C2	42-Ball, Plastic Chip-Size Ball Grid Array Package (CBGA) 8 x 14 mm
44R	44-Lead, 0.525" Wide, Plastic Gull Wing Small Outline Package (SOIC/SOP)
40T	40-Lead, Thin Small Outline Package (TSOP)

Ordering Information

t_{ACC} (ns)	I_{CC} (mA)		Ordering Code	Package	Operation Range
	Active	Standby			
120	25	0.05	AT49LV080-12CC AT49LV080-12RC AT48LV080-12TC	42C2 44R 40T	Commercial (0° to 70°C)
	25	0.05	AT49LV080-12CI AT49LV080-12RI AT49LV080-12TI	42C2 44R 40T	Industrial (-40° to 85°C)
150	25	0.05	AT49LV080-15CC AT49LV080-15RC AT49LV080-15TC	42C2 44R 40T	Commercial (0° to 70°C)
	25	0.05	AT49LV080-15CI AT49LV080-15RI AT49LV080-15TI	42C2 44R 40T	Industrial (-40° to 85°C)
200	25	0.05	AT49LV080-20CC AT49LV080-20RC AT49LV080-20TC	42C2 44R 40T	Commercial (0° to 70°C)
	25	0.05	AT49LV080-20CI AT49LV080-20RI AT49LV080-20TI	42C2 44R 40T	Industrial (-40° to 85°C)
120	25	0.05	AT49LV080T-12CC AT49LV080T-12RC AT48LV080T-12TC	42C2 44R 40T	Commercial (0° to 70°C)
	25	0.05	AT49LV080T-12CI AT49LV080T-12RI AT49LV080T-12TI	42C2 44R 40T	Industrial (-40° to 85°C)
150	25	0.05	AT49LV080T-15CC AT49LV080T-15RC AT49LV080T-15TC	42C2 44R 40T	Commercial (0° to 70°C)
	25	0.05	AT49LV080T-15CI AT49LV080T-15RI AT49LV080T-15TI	42C2 44R 40T	Industrial (-40° to 85°C)
200	25	0.05	AT49LV080T-20CC AT49LV080T-20RC AT49LV080T-20TC	42C2 44R 40T	Commercial (0° to 70°C)
	25	0.05	AT49LV080T-20CI AT49LV080T-20RI AT49LV080T-20TI	42C2 44R 40T	Industrial (-40° to 85°C)

Package Type	
42C2	42-Ball, Plastic Chip-Size Ball Grid Array Package (CBGA) 8 x 14 mm
44R	44-Lead, 0.525" Wide, Plastic Gull Wing Small Outline Package (SOIC/SOP)
40T	40-Lead, Thin Small Outline Package (TSOP)