Features

- **Medium-voltage and Standard-voltage Operation**
  - **2.5 (V_{CC} = 2.5V to 5.5V)**
- **Automotive Temperature Range –40°C to 125°C**
- **Internally Organized 256 x 8 (2K)**
- **Two-wire Serial Interface**
- **Schmitt Trigger, Filtered Inputs for Noise Suppression**
- **Bidirectional Data Transfer Protocol**
- **400 kHz (2.5V) Compatibility**
- **Write Protect Pin for Hardware Data Protection**
- **8-byte Page Write Modes**
- **Partial Page Writes are Allowed**
- **Self-timed Write Cycle (5 ms max)**
- **High-reliability**
  - **Endurance: 1 Million Write Cycles**
  - **Data Retention: 100 Years**
- **8-lead JEDEC SOIC and 8-lead TSSOP Packages**

Description

The AT24C02B provides 2048 bits of serial electrically erasable and programmable read-only memory (EEPROM) organized as 256 words of 8 bits each. The device is optimized for use in many automotive applications where low-power and low-voltage operation are essential. The AT24C02B is available in space-saving 8-lead JEDEC SOIC and 8-lead TSSOP packages and is accessed via a two-wire serial interface. In addition, the entire family is available in 2.5V (2.5V to 5.5V) versions.

Table 1. Pin Configurations

Pin Name	Function
A0 – A2	Address Inputs
SDA	Serial Data
SCL	Serial Clock Input
WP	Write Protect
NC	No Connect

8-lead SOIC

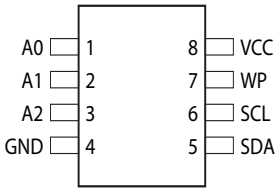

8-lead TSSOP

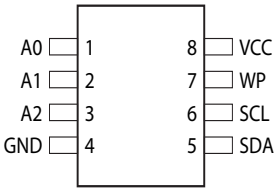

Two-wire Automotive Temperature Serial EEPROM

2K (256 x 8)

AT24C02B

Preliminary

5181B–SEEPR–1/07

Absolute Maximum Ratings

Operating Temperature	–55°C to +125°C
Storage Temperature	–65°C to +150°C
Voltage on Any Pin with Respect to Ground	–1.0V to +7.0V
Maximum Operating Voltage	6.25V
DC Output Current	5.0 mA

*NOTICE: Stresses beyond those listed under "Absolute Maximum Ratings" may cause permanent damage to the device. This is a stress rating only and functional operation of the device at these or any other conditions beyond those indicated in the operational sections of this specification is not implied. Exposure to absolute maximum rating conditions for extended periods may affect device reliability.

Figure 1. Block Diagram

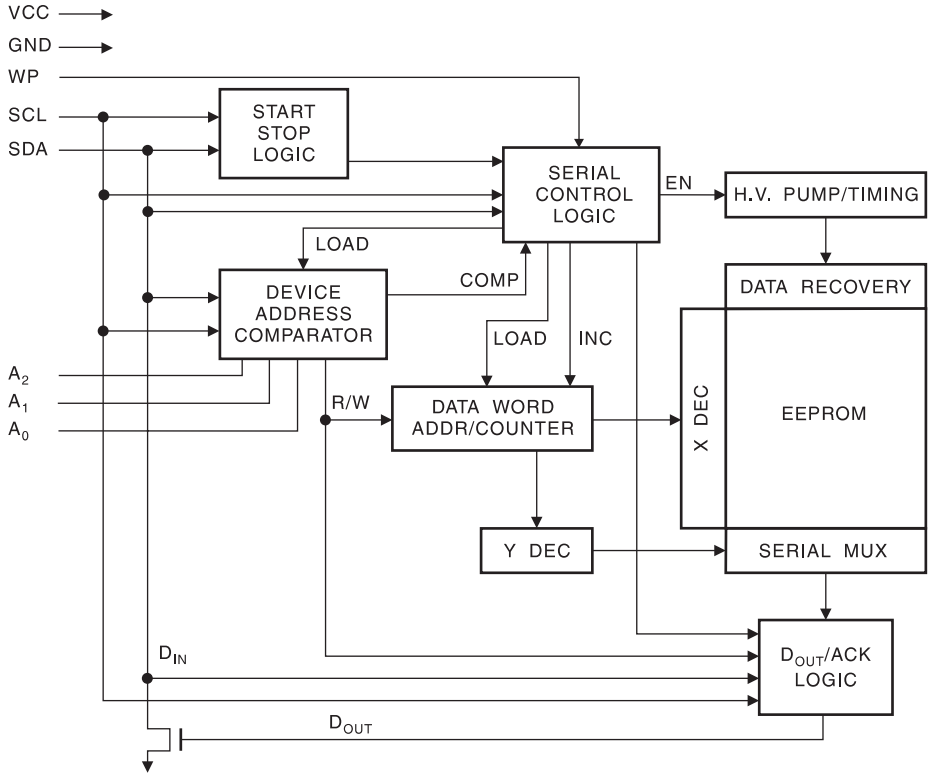

Pin Description

SERIAL CLOCK (SCL): The SCL input is used to positive edge clock data into each EEPROM device and negative edge clock data out of each device.

SERIAL DATA (SDA): The SDA pin is bi-directional for serial data transfer. This pin is open-drain driven and may be wire-ORed with any number of other open-drain or open-collector devices.

DEVICE/PAGE ADDRESSES (A2, A1, A0): The A2, A1 and A0 pins are device address inputs that are hard wired for the AT24C02B. As many as eight 2K devices may be addressed on a single bus system (device addressing is discussed in detail under the Device Addressing section).

WRITE PROTECT (WP): The AT24C02B has a Write Protect pin that provides hardware data protection. The Write Protect pin allows normal read/write operations when

connected to ground (GND). When the Write Protect pin is connected to V_{CC}, the write protection feature is enabled and operates as shown in the following table.

Table 2. Write Protect

WP Pin Status	Part of the Array Protected
	24C02B
At V_{CC}	Full (2K) Array
At GND	Normal Read/Write Operations

Memory Organization

AT24C02B, 2K SERIAL EEPROM: Internally organized with 32 pages of 8 bytes each, the 2K requires an 8-bit data word address for random word addressing.

Table 3. Pin Capacitance[1]
Applicable over recommended operating range from T_A = 25°C, f = 1.0 MHz, V_{CC} = +2.5V

Symbol	Test Condition	Max	Units	Conditions
$C_{I/O}$	Input/Output Capacitance (SDA)	8	pF	$V_{I/O}$ = 0V
C_{IN}	Input Capacitance (A_0, A_1, A_2, SCL)	6	pF	V_{IN} = 0V

Note: 1. This parameter is characterized and is not 100% tested.

Table 4. DC Characteristics
Applicable over recommended operating range from: T_A = –40°C to +125°C, V_{CC} = +2.5V to +5.5V (unless otherwise noted)

Symbol	Parameter	Test Condition	Min	Typ	Max	Units
V_{CC1}	Supply Voltage		2.5		5.5	V
I_{CC}	Supply Current V_{CC} = 5.0V	Read at 100 kHz		0.4	1.0	mA
I_{CC}	Supply Current V_{CC} = 5.0V	Write at 100 kHz		2.0	3.0	mA
I_{SB1}	Standby Current V_{CC} = 2.5V	V_{IN} = V_{CC} or V_{SS}		1.6	4.0	µA
I_{SB2}	Standby Current V_{CC} = 5.0V	V_{IN} = V_{CC} or V_{SS}		8.0	18.0	µA
I_{LI}	Input Leakage Current	V_{IN} = V_{CC} or V_{SS}		0.10	3.0	µA
I_{LO}	Output Leakage Current	V_{OUT} = V_{CC} or V_{SS}		0.05	3.0	µA
V_{IL}	Input Low Level[1]		–0.6		V_{CC} x 0.3	V
V_{IH}	Input High Level[1]		V_{CC} x 0.7		V_{CC} + 0.5	V
V_{OL2}	Output Low Level V_{CC} = 3.0V	I_{OL} = 2.1 mA			0.4	V
V_{OL1}	Output Low Level V_{CC} = 1.8V	I_{OL} = 0.15 mA			0.2	V

Note: 1. V_{IL} min and V_{IH} max are reference only and are not tested.

Table 5. AC Characteristics

Applicable over recommended operating range from T_A = –40°C to +125°C, V_{CC} = +2.5V to +5.5V, CL = 1 TTL Gate and 100 pF (unless otherwise noted)

Symbol	Parameter	AT24C02B		Units
		Min	Max	
f_{SCL}	Clock Frequency, SCL		400	kHz
t_{LOW}	Clock Pulse Width Low	1.2		µs
t_{HIGH}	Clock Pulse Width High	0.6		µs
t_I	Noise Suppression Time(1)		50	ns
t_{AA}	Clock Low to Data Out Valid	0.1	0.9	µs
t_{BUF}	Time the bus must be free before a new transmission can start(2)	1.2		µs
$t_{HD.STA}$	Start Hold Time	0.6		µs
$t_{SU.STA}$	Start Set-up Time	0.6		µs
$t_{HD.DAT}$	Data In Hold Time	0		µs
$t_{SU.DAT}$	Data In Set-up Time	100		ns
t_R	Inputs Rise Time(2)		300	ns
t_F	Inputs Fall Time(2)		300	ns
$t_{SU.STO}$	Stop Set-up Time	0.6		µs
t_{DH}	Data Out Hold Time	50		ns
t_{WR}	Write Cycle Time		5	ms
Endurance(2)	5.0V, 25°C, Page Mode	1M		Write Cycles

Notes: 1. This parameter is characterized and is not 100% tested (T_A = 25°C).
2. This parameter is characterized.

Device Operation

CLOCK and DATA TRANSITIONS: The SDA pin is normally pulled high with an external device. Data on the SDA pin may change only during SCL low time periods (see to Figure 5 on page 7). Data changes during SCL high periods will indicate a start or stop condition as defined below.

START CONDITION: A high-to-low transition of SDA with SCL high is a start condition which must precede any other command (see to Figure 6 on page 7).

STOP CONDITION: A low-to-high transition of SDA with SCL high is a stop condition. After a read sequence, the stop command will place the EEPROM in a standby power mode (see Figure 6 on page 7).

ACKNOWLEDGE: All addresses and data words are serially transmitted to and from the EEPROM in 8-bit words. The EEPROM sends a “0” to acknowledge that it has received each word. This happens during the ninth clock cycle.

STANDBY MODE: The AT24C02B features a low-power standby mode which is enabled: (a) upon power-up and (b) after the receipt of the STOP bit and the completion of any internal operations.

2-WIRE SOFTWARE RESET: After an interruption in protocol, power loss or system reset, any 2-wire part can be protocol reset by following these steps: (a) Create a start bit condition, (b) clock 9 cycles, (c) create another start but followed by stop bit condition as shown below. The device is ready for next communication after above steps have been completed.

Figure 2. Software Reset

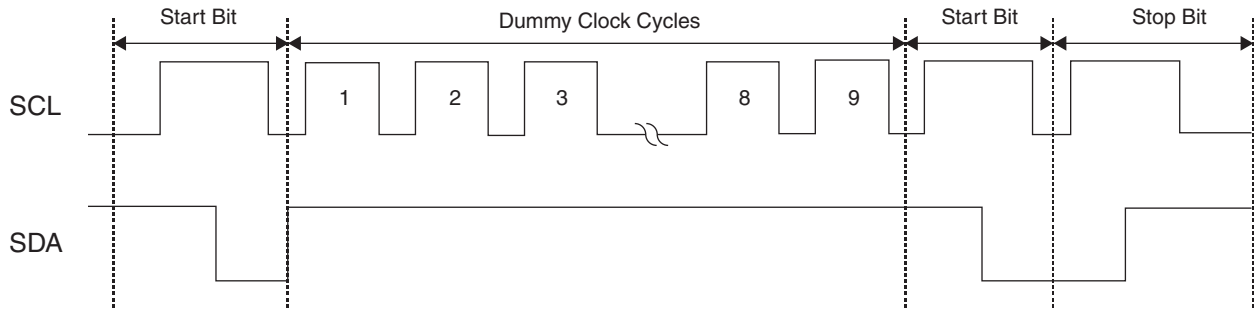

Bus Timing

Figure 3. SCL: Serial Clock, SDA: Serial Data I/O

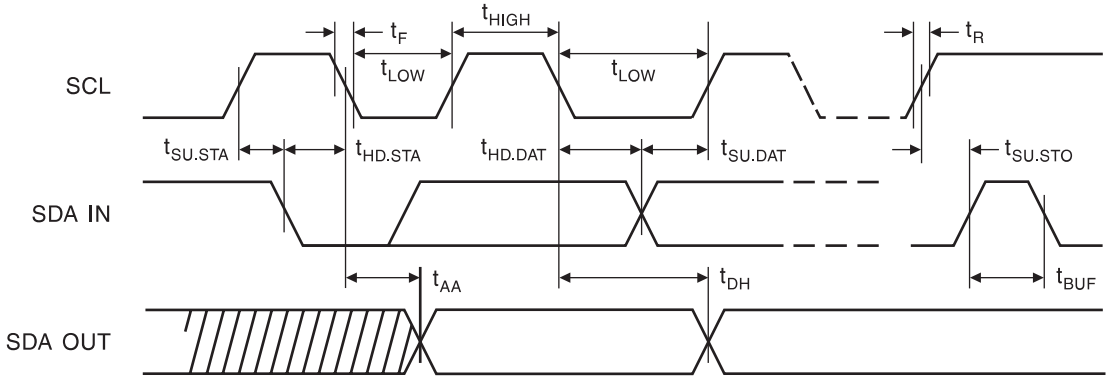

Write Cycle Timing

Figure 4. SCL: Serial Clock, SDA: Serial Data I/O

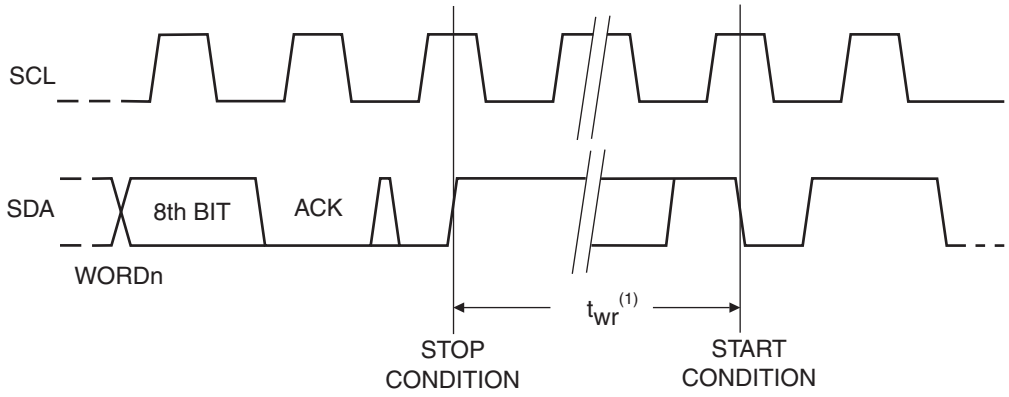

Note: 1. The write cycle time t_{WR} is the time from a valid stop condition of a write sequence to the end of the internal clear/write cycle.

Figure 5. Data Validity

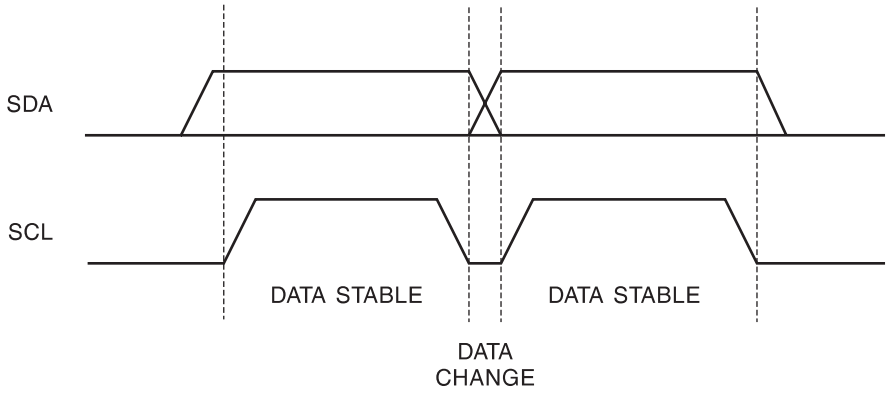

Figure 6. Start and Stop Definition

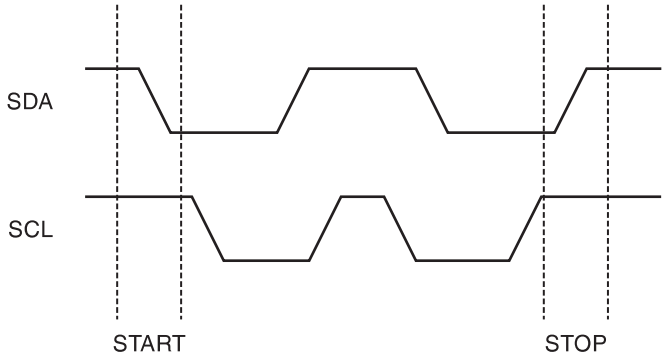

Figure 7. Output Acknowledge

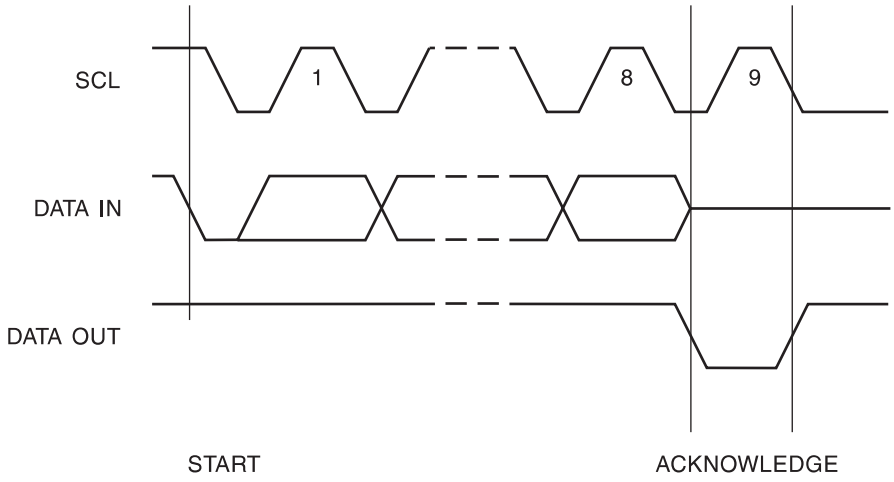

Device Addressing

The 2K EEPROM device requires an 8-bit device address word following a start condition to enable the chip for a read or write operation (see to Figure 8 on page 10).

The device address word consists of a mandatory “1”, “0” sequence for the first four most significant bits as shown. This is common to all the Serial EEPROM devices.

The next 3 bits are the A2, A1 and A0 device address bits for the 2K EEPROM. These 3 bits must compare to their corresponding hardwired input pins.

The eighth bit of the device address is the read/write operation select bit. A read operation is initiated if this bit is high and a write operation is initiated if this bit is low.

Upon a compare of the device address, the EEPROM will output a “0”. If a compare is not made, the chip will return to a standby state.

Write Operations

BYTE WRITE: A write operation requires an 8-bit data word address following the device address word and acknowledgment. Upon receipt of this address, the EEPROM will again respond with a “0” and then clock in the first 8-bit data word. Following receipt of the 8-bit data word, the EEPROM will output a “0” and the addressing device, such as a microcontroller, must terminate the write sequence with a stop condition. At this time the EEPROM enters an internally timed write cycle, t_{WR}, to the nonvolatile memory. All inputs are disabled during this write cycle and the EEPROM will not respond until the write is complete (see Figure 9 on page 10).

PAGE WRITE: The 2K EEPROM is capable of an 8-byte page write.

A page write is initiated the same as a byte write, but the microcontroller does not send a stop condition after the first data word is clocked in. Instead, after the EEPROM acknowledges receipt of the first data word, the microcontroller can transmit up to seven data words. The EEPROM will respond with a “0” after each data word received. The microcontroller must terminate the page write sequence with a stop condition (see Figure 10 on page 11).

The data word address lower three bits are internally incremented following the receipt of each data word. The higher data word address bits are not incremented, retaining the memory page row location. When the word address, internally generated, reaches the page boundary, the following byte is placed at the beginning of the same page. If more than eight data words are transmitted to the EEPROM, the data word address will “roll over” and previous data will be overwritten.

ACKNOWLEDGE POLLING: Once the internally timed write cycle has started and the EEPROM inputs are disabled, acknowledge polling can be initiated. This involves sending a start condition followed by the device address word. The read/write bit is representative of the operation desired. Only if the internal write cycle has completed will the EEPROM respond with a “0”, allowing the read or write sequence to continue.

Read Operations

Read operations are initiated the same way as write operations with the exception that the read/write select bit in the device address word is set to “1”. There are three read operations: current address read, random address read and sequential read.

CURRENT ADDRESS READ: The internal data word address counter maintains the last address accessed during the last read or write operation, incremented by one. This address stays valid between operations as long as the chip power is maintained. The address “roll over” during read is from the last byte of the last memory page to the first byte of the first page. The address “roll over” during write is from the last byte of the current page to the first byte of the same page.

Once the device address with the read/write select bit set to “1” is clocked in and acknowledged by the EEPROM, the current address data word is serially clocked out. The microcontroller does not respond with an input “0” but does generate a following stop condition (see Figure 11 on page 11).

RANDOM READ: A random read requires a “dummy” byte write sequence to load in the data word address. Once the device address word and data word address are clocked in and acknowledged by the EEPROM, the microcontroller must generate another start condition. The microcontroller now initiates a current address read by sending a device address with the read/write select bit high. The EEPROM acknowledges the device address and serially clocks out the data word. The microcontroller does not respond with a “0” but does generate a following stop condition (see Figure 12 on page 12).

SEQUENTIAL READ: Sequential reads are initiated by either a current address read or a random address read. After the microcontroller receives a data word, it responds with an acknowledge. As long as the EEPROM receives an acknowledge, it will continue to increment the data word address and serially clock out sequential data words. When the memory address limit is reached, the data word address will “roll over” and the sequential read will continue. The sequential read operation is terminated when the microcontroller does not respond with a “0” but does generate a following stop condition (see Figure 13 on page 12).

Figure 8. Device Address

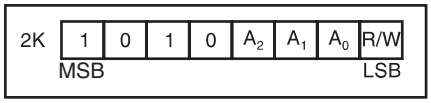

Figure 9. Byte Write

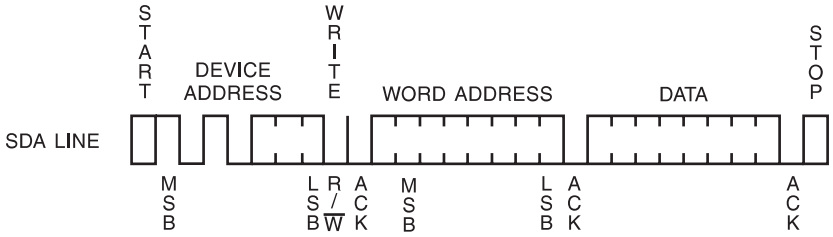

Figure 10. Page Write

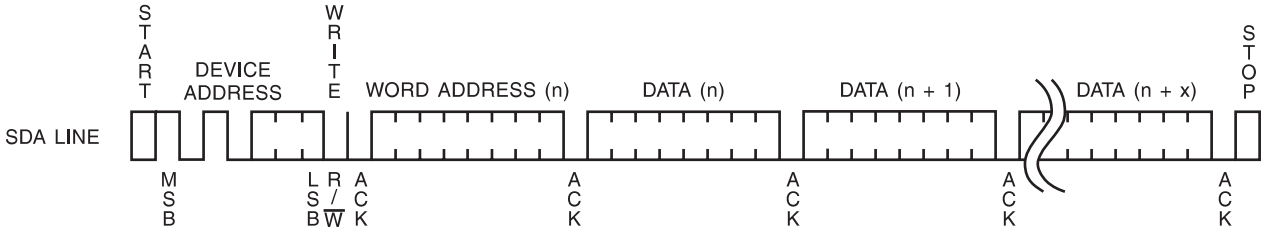

Figure 11. Current Address Read

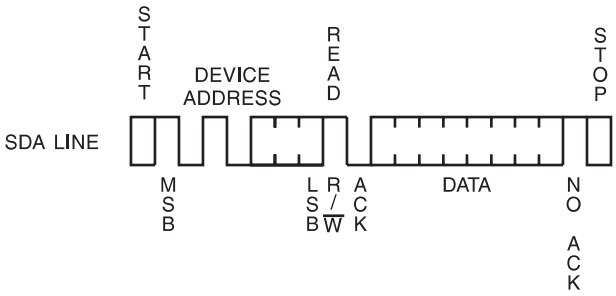

Figure 12. Random Read

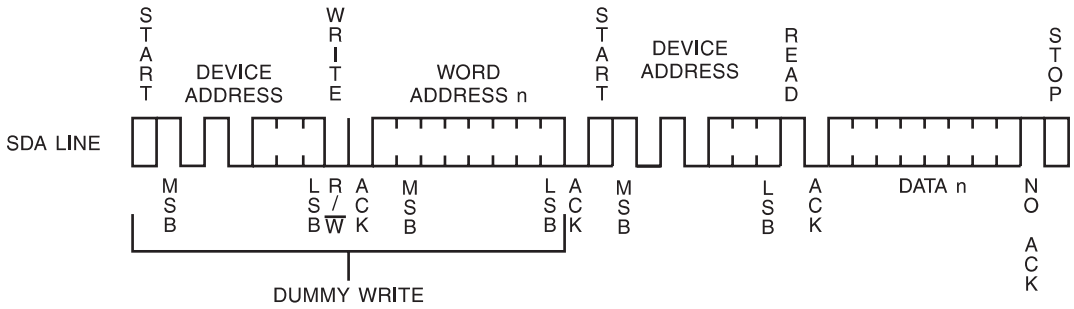

Figure 13. Sequential Read

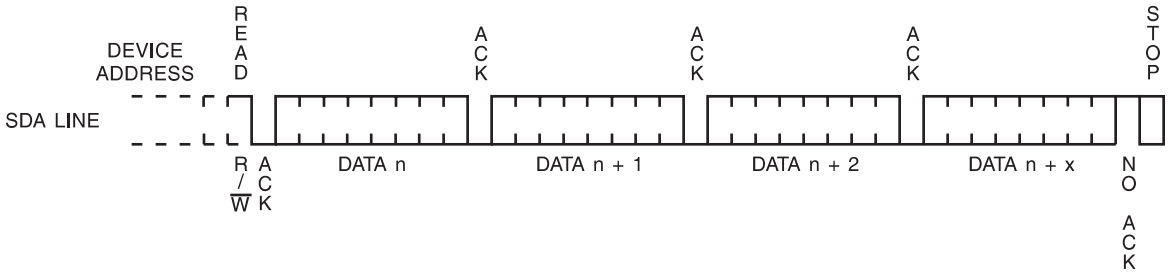

AT24C02B Ordering Information

Ordering Code	Package	Operation Range
AT24C02BN-SP25-B[1]	8S1	Lead-free/Halogen-free/NiPdAu Lead Finish/Automotive Temperature (–40°C to 125°C)
AT24C02BN-SP25-T[2]	8S1	
AT24C02B-TP25-B[1]	8A2	
AT24C02B-TP25-T[2]	8A2	

Notes: 1. "-B" denotes bulk.
2. "-T" denotes tape and reel. SOIC = 4K per reel. TSSOP = 5K per reel.

Package Type	
8S1	8-lead, 0.150" Wide, Plastic Gull Wing Small Outline (JEDEC SOIC)
8A2	8-lead, 0.170" Wide, Thin Shrink Small Outline Package (TSSOP)
Options	
-2.5	Low-voltage (2.5V to 5.5V)

Packaging Information

8S1 – JEDEC SOIC

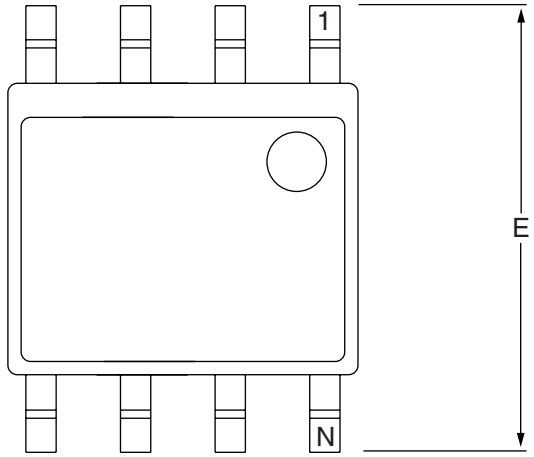

Top View

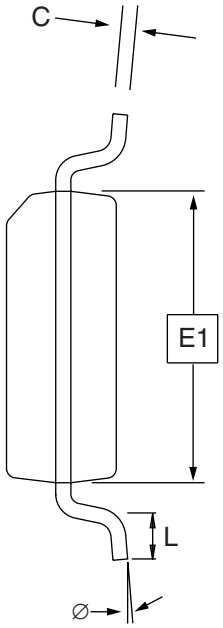

End View

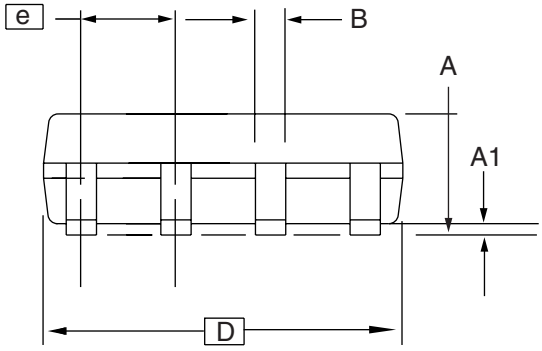

Side View

COMMON DIMENSIONS
(Unit of Measure = mm)

SYMBOL	MIN	NOM	MAX	NOTE
A	1.35	–	1.75	
A1	0.10	–	0.25	
b	0.31	–	0.51	
C	0.17	–	0.25	
D	4.80	–	5.00	
E1	3.81	–	3.99	
E	5.79	–	6.20	
e	1.27 BSC			
L	0.40	–	1.27	
∅	0°	–	8°	

Note: These drawings are for general information only. Refer to JEDEC Drawing MS-012, Variation AA for proper dimensions, tolerances, datums, etc.

10/7/03

1150 E. Cheyenne Mtn. Blvd. Colorado Springs, CO 80906	**TITLE** **8S1**, 8-lead (0.150" Wide Body), Plastic Gull Wing Small Outline (JEDEC SOIC)	**DRAWING NO.** 8S1	**REV.** B

8A2 – TSSOP

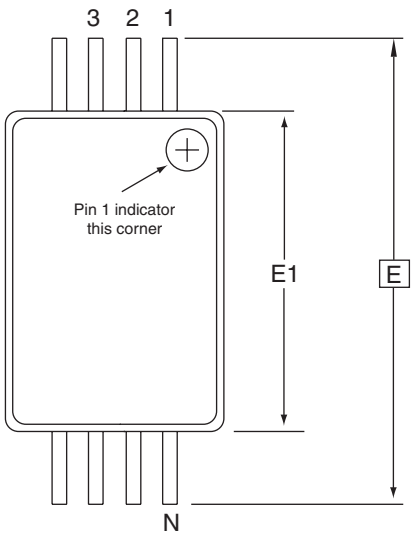

Top View

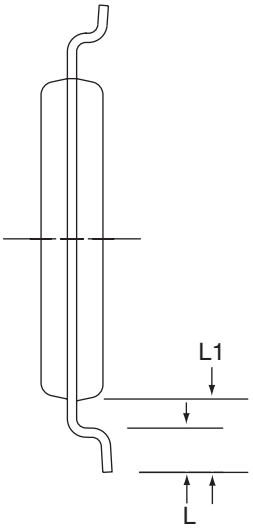

End View

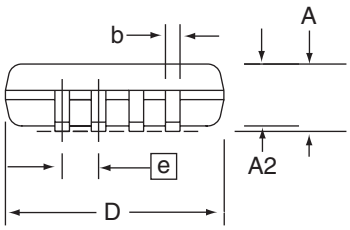

Side View

COMMON DIMENSIONS
(Unit of Measure = mm)

SYMBOL	MIN	NOM	MAX	NOTE
D	2.90	3.00	3.10	2, 5
E		6.40 BSC		
E1	4.30	4.40	4.50	3, 5
A	–	–	1.20	
A2	0.80	1.00	1.05	
b	0.19	–	0.30	4
e		0.65 BSC		
L	0.45	0.60	0.75	
L1		1.00 REF		

Notes:
1. This drawing is for general information only. Refer to JEDEC Drawing MO-153, Variation AA, for proper dimensions, tolerances, datums, etc.
2. Dimension D does not include mold Flash, protrusions or gate burrs. Mold Flash, protrusions and gate burrs shall not exceed 0.15 mm (0.006 in) per side.
3. Dimension E1 does not include inter-lead Flash or protrusions. Inter-lead Flash and protrusions shall not exceed 0.25 mm (0.010 in) per side.
4. Dimension b does not include Dambar protrusion. Allowable Dambar protrusion shall be 0.08 mm total in excess of the b dimension at maximum material condition. Dambar cannot be located on the lower radius of the foot. Minimum space between protrusion and adjacent lead is 0.07 mm.
5. Dimension D and E1 to be determined at Datum Plane H.

5/30/02

	TITLE	DRAWING NO.	REV.
2325 Orchard Parkway San Jose, CA 95131	**8A2**, 8-lead, 4.4 mm Body, Plastic Thin Shrink Small Outline Package (TSSOP)	8A2	B

Revision History

Doc. Rev.	Date	Comments
5181B	1/2007	Added preliminary status. Added new ordering information to page 12. Added notes to ordering information on page 12. Changed voltage from 2.7 to 2.5. Deleted 8-lead PDIP offering. Deleted 5.0V offering.
5181A	7/2006	Initial document release.

Atmel Corporation

2325 Orchard Parkway
San Jose, CA 95131, USA
Tel: 1(408) 441-0311
Fax: 1(408) 487-2600

Regional Headquarters

Europe
Atmel Sarl
Route des Arsenaux 41
Case Postale 80
CH-1705 Fribourg
Switzerland
Tel: (41) 26-426-5555
Fax: (41) 26-426-5500

Asia
Room 1219
Chinachem Golden Plaza
77 Mody Road Tsimshatsui
East Kowloon
Hong Kong
Tel: (852) 2721-9778
Fax: (852) 2722-1369

Japan
9F, Tonetsu Shinkawa Bldg.
1-24-8 Shinkawa
Chuo-ku, Tokyo 104-0033
Japan
Tel: (81) 3-3523-3551
Fax: (81) 3-3523-7581

Atmel Operations

Memory
2325 Orchard Parkway
San Jose, CA 95131, USA
Tel: 1(408) 441-0311
Fax: 1(408) 436-4314

Microcontrollers
2325 Orchard Parkway
San Jose, CA 95131, USA
Tel: 1(408) 441-0311
Fax: 1(408) 436-4314

La Chantrerie
BP 70602
44306 Nantes Cedex 3, France
Tel: (33) 2-40-18-18-18
Fax: (33) 2-40-18-19-60

ASIC/ASSP/Smart Cards
Zone Industrielle
13106 Rousset Cedex, France
Tel: (33) 4-42-53-60-00
Fax: (33) 4-42-53-60-01

1150 East Cheyenne Mtn. Blvd.
Colorado Springs, CO 80906, USA
Tel: 1(719) 576-3300
Fax: 1(719) 540-1759

Scottish Enterprise Technology Park
Maxwell Building
East Kilbride G75 0QR, Scotland
Tel: (44) 1355-803-000
Fax: (44) 1355-242-743

RF/Automotive
Theresienstrasse 2
Postfach 3535
74025 Heilbronn, Germany
Tel: (49) 71-31-67-0
Fax: (49) 71-31-67-2340

1150 East Cheyenne Mtn. Blvd.
Colorado Springs, CO 80906, USA
Tel: 1(719) 576-3300
Fax: 1(719) 540-1759

Biometrics/Imaging/Hi-Rel MPU/
High Speed Converters/RF Datacom
Avenue de Rochepleine
BP 123
38521 Saint-Egreve Cedex, France
Tel: (33) 4-76-58-30-00
Fax: (33) 4-76-58-34-80

Literature Requests
www.atmel.com/literature

Disclaimer: The information in this document is provided in connection with Atmel products. No license, express or implied, by estoppel or otherwise, to any intellectual property right is granted by this document or in connection with the sale of Atmel products. **EXCEPT AS SET FORTH IN ATMEL'S TERMS AND CONDITIONS OF SALE LOCATED ON ATMEL'S WEB SITE, ATMEL ASSUMES NO LIABILITY WHATSOEVER AND DISCLAIMS ANY EXPRESS, IMPLIED OR STATUTORY WARRANTY RELATING TO ITS PRODUCTS INCLUDING, BUT NOT LIMITED TO, THE IMPLIED WARRANTY OF MERCHANTABILITY, FITNESS FOR A PARTICULAR PURPOSE, OR NON-INFRINGEMENT. IN NO EVENT SHALL ATMEL BE LIABLE FOR ANY DIRECT, INDIRECT, CONSEQUENTIAL, PUNITIVE, SPECIAL OR INCIDENTAL DAMAGES (INCLUDING, WITHOUT LIMITATION, DAMAGES FOR LOSS OF PROFITS, BUSINESS INTERRUPTION, OR LOSS OF INFORMATION) ARISING OUT OF THE USE OR INABILITY TO USE THIS DOCUMENT, EVEN IF ATMEL HAS BEEN ADVISED OF THE POSSIBILITY OF SUCH DAMAGES.** Atmel makes no representations or warranties with respect to the accuracy or completeness of the contents of this document and reserves the right to make changes to specifications and product descriptions at any time without notice. Atmel does not make any commitment to update the information contained herein. Unless specifically provided otherwise, Atmel products are not suitable for, and shall not be used in, automotive applications. Atmel's products are not intended, authorized, or warranted for use as components in applications intended to support or sustain life.

© 2007 Atmel Corporation. **All rights reserved.** Atmel®, logo and combinations thereof, Everywhere You Are® and others, are registered trademarks or trademarks of Atmel Corporation or its subsidiaries. Other terms and product names may be trademarks of others.

Printed on recycled paper.

5181B–SEEPR–1/07