4.8 V NPN Common Emitter Output Power Transistor for AMPS, ET ACS Phones

Technical Data

AT-33225

Features

- **4.8 Volt Operation**
- **+31.0 dBm P_{out} @ 900 MHz, Typ.**
- **70% Collector Efficiency @ 900 MHz, Typ.**
- **9 dB Power Gain @ 900 MHz, Typ.**
- **-29 dBc IMD_3 @ P_{out} of 24 dBm per tone, 900 MHz, Typ.**
- **Internal Input Pre-Matching Facilitates Cascading**
- **50% Smaller than SOT-223 Package**

Applications

- **Output Power Device for AMPS and ETACS Handsets**
- **900 MHz ISM**

MSOP-3 Surface Mount Plastic Package Outline 25

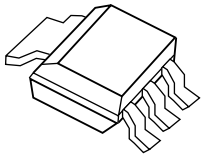

Pin Configuration

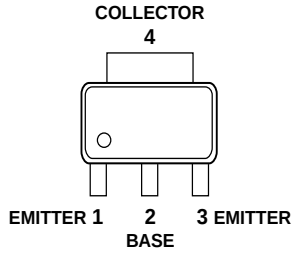

Description

Hewlett Packard's AT-33225 is a low cost, NPN power silicon bipolar junction transistor housed in a miniature MSOP-3 surface mount plastic package. This device is designed for use as an output device for AMPS and ETACS mobile phones. The AT-33225 features over 1 watt CW output power when operated at 4.8 volts. Excellent gain and superior efficiency make the AT-33225 ideal for use in battery powered systems.

The AT-33225 is fabricated with Hewlett Packard's 10 GHz F_t Self-Aligned-Transistor (SAT) process. The die are nitride passivated for surface protection. Excellent device uniformity, performance and reliability are produced by the use of ion-implantation, self-alignment techniques, and gold metalization in the fabrication of these devices.

AT-33225 Absolute Maximum Ratings

Symbol	Parameter	Units	Absolute Maximum[1]
V_{EBO}	Emitter-Base Voltage	V	1.4
V_{CBO}	Collector-Base Voltage	V	16.0
V_{CEO}	Collector-Emitter Voltage	V	9.5
I_C	Collector Current	mA	640
P_T	Power Dissipation[2]	W	1.6
T_j	Junction Temperature	°C	150
T_{STG}	Storage Temperature	°C	-65 to 150

Thermal Resistance[3]:
$\theta_{jc} = 40°C/W$

Notes:
1. Permanent damage may occur if any of these limits are exceeded.
2. Derate at 25 mW/°C for $T_C > 85°C$. T_c is defined to be the temperature of the collector pin 4, where the lead contacts the circuit board.
3. Using the liquid crystal technique, $V_{CE} = 4.5\,V$, $I_c = 100\,mA$, $T_j = 150°C$, 1-2 µm "hot-spot" resolution.

Electrical Specifications, $T_C = 25°C$

Symbol	Parameters and Test Conditions		Units	Min.	Typ.	Max.
	Freq. = 900 MHz, $V_{CE} = 4.8\,V$, $I_{CQ} = 6\,mA$, CW operation, Test Circuit A, unless otherwise specified					
P_{out}	Output Power[1]	$P_{in} = +22\,dBm$	dBm	+30.0	+31.0	
η_C	Collector Efficiency[1]	$P_{in} = +22\,dBm$	%	60	70	
IMD_3	3rd Order Intermodulation Distortion, 2 Tone Test, P_{out} each Tone = +24 dBm[1]	F1 = 899 MHz F2 = 901 MHz	dBc		-29	
	Mismatch Tolerance, No Damage[1]	$P_{out} = +31\,dBm$ any phase, 2 sec duration				7:1
BV_{EBO}	Emitter-Base Breakdown Voltage	$I_E = 0.4\,mA$, open collector	V	1.4		
BV_{CBO}	Collector-Base Breakdown Voltage	$I_C = 2.0\,mA$, open emitter	V	16.0		
BV_{CEO}	Collector-Emitter Breakdown Voltage	$I_C = 10.0\,mA$, open base	V	9.5		
h_{FE}	Forward Current Transfer Ratio	$V_{CE} = 3\,V$, $I_C = 180\,mA$	—	80	150	330
I_{CEO}	Collector Leakage Current	$V_{CEO} = 5\,V$	µA			30

Note:
1. With external matching on input and output, tested in a 50 ohm environment. Refer to Test Circuit A (ETACS/ISM).

AT-33225 Typical Performance, T_C = 25°C

Frequency = 900 MHz, V_{CE} = 4.8 V, I_{CQ} = 6 mA, CW operation, Test Circuit A (ETACS/ISM), unless otherwise specified.

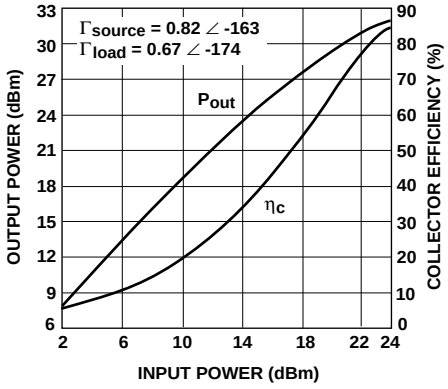

Figure 1. Output Power and Collector Efficiency vs. Input Power.

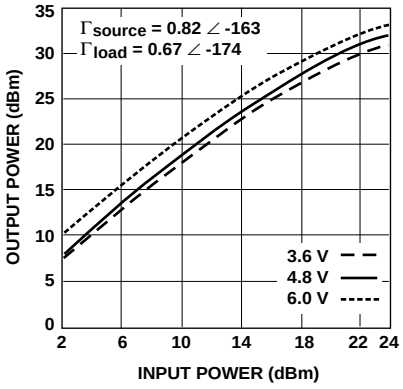

Figure 2. Output Power vs. Input Power Over Bias Voltage.

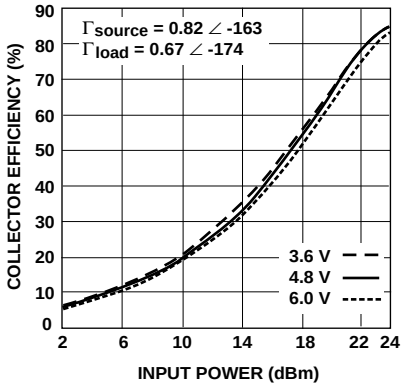

Figure 3. Collector Efficiency vs. Input Power Over Bias Voltage.

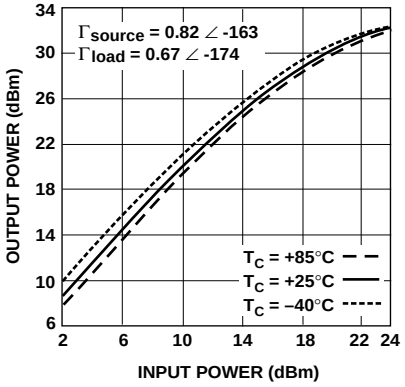

Figure 4. Output Power vs. Input Power Over Temperature.

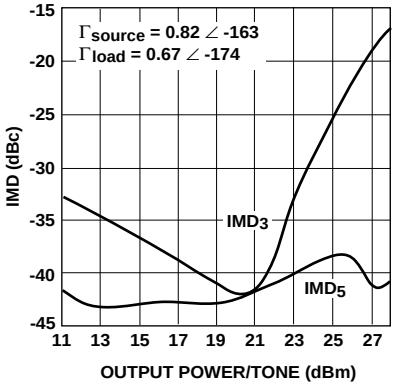

Figure 5. IMD_3, IMD_5 vs. Output Power Per Tone.

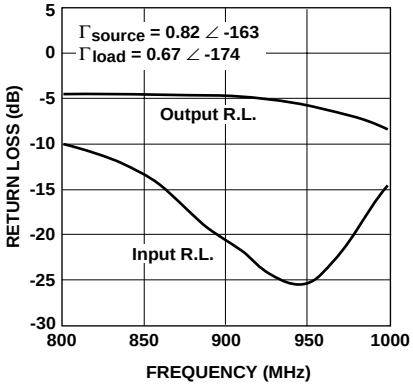

Figure 6. Input and Output Return Loss vs. Frequency.

AT-33225 Typical Performance, T_C = 25°C

Frequency = 836.5 MHz, V_{CE} = 4.8 V, I_{CQ} = 6 mA, CW operation, Test Circuit B (AMPS), unless otherwise specified.

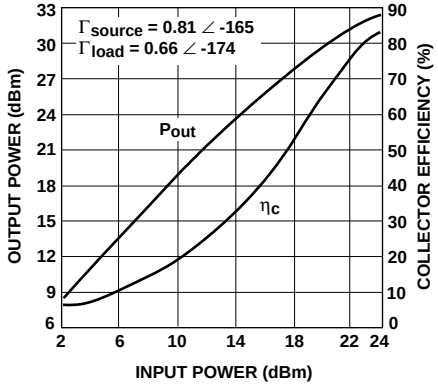

Figure 7. Output Power and Collector Efficiency vs. Input Power.

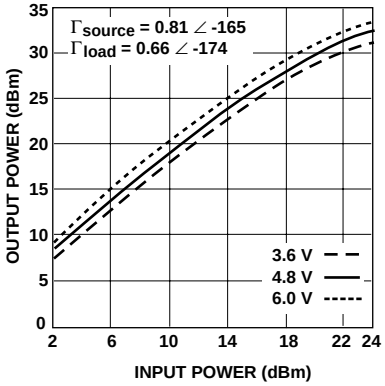

Figure 8. Output Power vs. Input Power Over Bias Voltage.

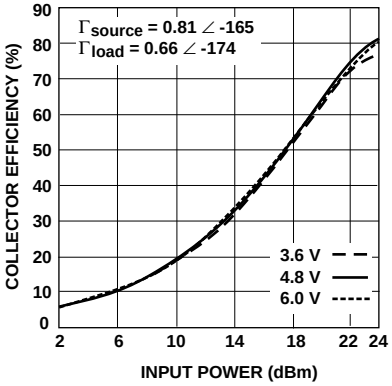

Figure 9. Collector Efficiency vs. InputPower Over Bias Voltage.

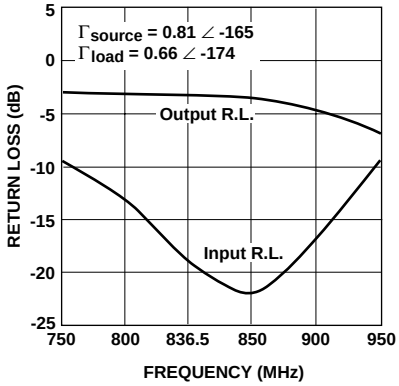

Figure 10. Input and Output Return Loss vs. Frequency.

AT-33225 Typical Large Signal Impedances

$V_{CE} = 4.8\,V, I_{CQ} = 6\,mA, P_{out} = +31.0\,dBm$

Freq. MHz	Γ source		Γ load	
	Mag.	Ang.	Mag.	Ang.
750	0.77	-162	0.64	-174
800	0.80	-169	0.67	-173
850	0.82	-164	0.64	-175
900	0.82	-163	0.67	-174
950	0.83	-166	0.74	-175

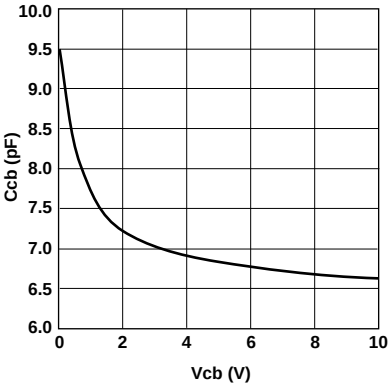

Figure 11. Collector-Base Capacitance vs. Collector-Base Voltage (DC Test).

SPICE Model Parameters

Die Model

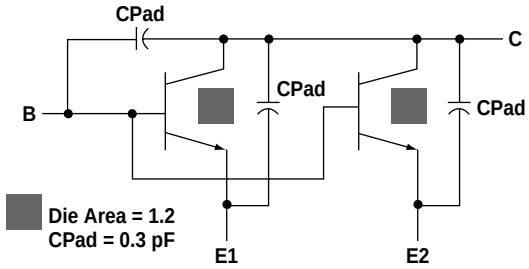

Label	Value	Label	Value
BF	280	TR	1E-9
IKF	299.9	EG	1.11
ISE	9.9E-11	IS	3.598E-15
NE	2.399	XTI	3
VAF	33.16	CJC	0.8E-12
NF	0.9935	VJC	0.4831
TF	1.6E-11	MJC	0.2508
XTF	0.006656	XCJC	0.001
VTF	0.02785	FC	0.999
ITF	0.001	CJE	6.16E-12
PTF	23	VJE	1.186
XTB	0	MJE	0.5965
BR	54.61	RB	0.752
IKR	81	IRB	0
ISC	8.7E-13	RBM	0.01
NC	1.587	RE	1.27
VAR	1.511	RC	0.107
NR	0.9886		

Packaged Model

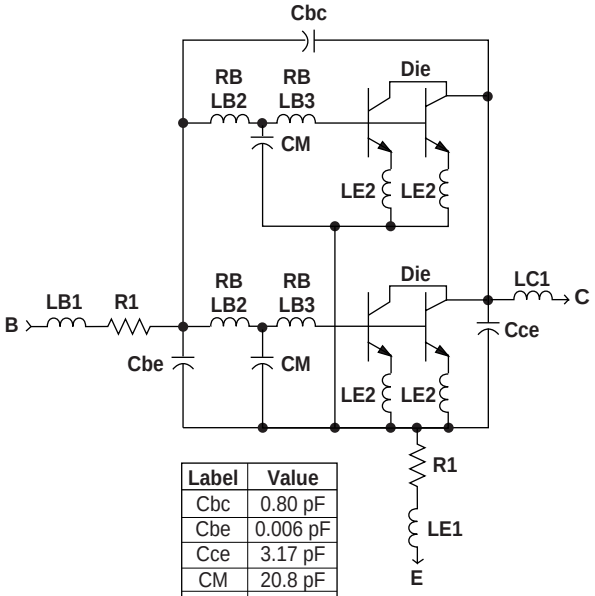

Label	Value
Cbc	0.80 pF
Cbe	0.006 pF
Cce	3.17 pF
CM	20.8 pF
LB1	0.63 nH
LB2	0.10 nH
LB3	0.87 nH
LE1	0.35 nH
LE2	0.78 nH
LC1	0.74 nH
RB	0.1 Ω
R1	0.2 Ω

AT-33225 Typical Scattering Parameters, Common Emitter, $Z_o = 50\ \Omega$

$V_{CE} = 3.6\,V, I_C = 200\,mA, T_C = 25°C$

Freq.	S_{11}		S_{21}			S_{12}			S_{22}	
GHz	Mag.	Ang.	dB	Mag.	Ang.	dB	Mag.	Ang.	Mag.	Ang.
0.05	0.88	-164	27.0	22.26	99	-34.9	0.018	26	0.58	-153
0.10	0.89	-174	21.2	11.42	91	-34.0	0.020	32	0.57	-168
0.25	0.88	178	13.6	4.80	79	-30.5	0.030	47	0.56	-179
0.50	0.85	172	9.1	2.85	62	-25.8	0.051	51	0.49	175
0.75	0.77	168	8.2	2.58	38	-23.2	0.069	40	0.34	-177
0.90	0.70	171	8.5	2.67	13	-23.4	0.068	25	0.36	-142
1.00	0.71	178	8.2	2.57	-10	-26.0	0.050	14	0.59	-133
1.25	0.93	178	2.3	1.30	-68	-26.6	0.047	93	0.98	-162
1.50	0.98	169	-5.5	0.53	-97	-20.5	0.094	86	0.97	180
1.75	0.98	163	-13.6	0.21	-119	-18.1	0.125	78	0.93	170
2.00	0.98	159	-23.2	0.07	-163	-16.4	0.151	72	0.90	164
$V_{CE} = 4.8\,V, I_C = 150\,mA, T_C = 25°C$										
0.05	0.87	-162	27.1	22.76	100	-34.4	0.019	25	0.55	-149
0.10	0.88	-172	21.4	11.69	91	-33.6	0.021	30	0.53	-166
0.25	0.88	179	13.8	4.91	78	-30.2	0.031	44	0.52	-178
0.50	0.85	172	9.2	2.89	61	-26.0	0.050	49	0.45	177
0.75	0.78	169	8.2	2.58	37	-23.6	0.066	39	0.33	-171
0.90	0.72	172	8.4	2.62	13	-24.0	0.063	26	0.38	-138
1.00	0.72	178	8.1	2.53	-9	-26.4	0.048	17	0.59	-132
1.25	0.93	177	2.6	1.35	-66	-26.7	0.046	93	0.98	-161
1.50	0.98	169	-5.1	0.56	-97	-20.5	0.094	86	0.97	-179
1.75	0.98	163	-13.0	0.22	-119	-18.1	0.125	78	0.92	171
2.00	0.98	159	-22.2	0.08	-159	-16.5	0.150	72	0.90	165
$V_{CE} = 6.0\,V, I_C = 150\,mA, T_C = 25°C$										
0.05	0.87	-161	27.3	23.07	100	-34.4	0.019	25	0.54	-149
0.10	0.88	-172	21.5	11.86	91	-33.6	0.021	30	0.52	-166
0.25	0.88	179	13.9	4.97	78	-30.5	0.030	44	0.51	-178
0.50	0.85	173	9.3	2.93	61	-26.2	0.049	49	0.44	177
0.75	0.78	169	8.3	2.59	37	-23.7	0.065	39	0.32	-169
0.90	0.72	172	8.4	2.63	13	-24.2	0.062	26	0.38	-137
1.00	0.73	177	8.1	2.53	-9	-26.6	0.047	18	0.60	-131
1.25	0.92	177	2.7	1.37	-65	-26.7	0.046	94	0.98	-160
1.50	0.98	169	-5.0	0.57	-96	-20.5	0.094	86	0.97	-179
1.75	0.98	163	-12.7	0.23	-119	-18.1	0.125	78	0.92	171
2.00	0.98	158	-21.7	0.08	-158	-16.5	0.150	72	0.90	165

Typical Performance

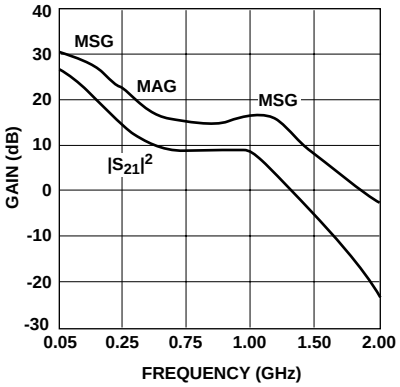

Figure 12. Insertion Power Gain, Maximum Available Gain, and Maximum Stable Gain vs. Frequency, V_{CE} = 3.6 V, I_C = 200 mA.

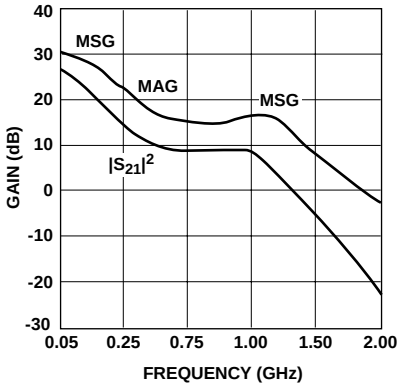

Figure 13. Insertion Power Gain, Maximum Available Gain, and Maximum Stable Gain vs. Frequency, V_{CE} = 4.8 V, I_C = 150 mA.

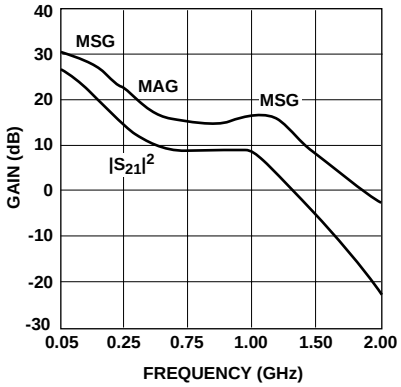

Figure 14. Insertion Power Gain, Maximum Available Gain, and Maximum Stable Gain vs. Frequency, V_{CE} = 6.0 V, I_C = 150 mA.

Test Circuit A: Test Circuit Board Layout @ 900 MHz (ETACS/ISM)

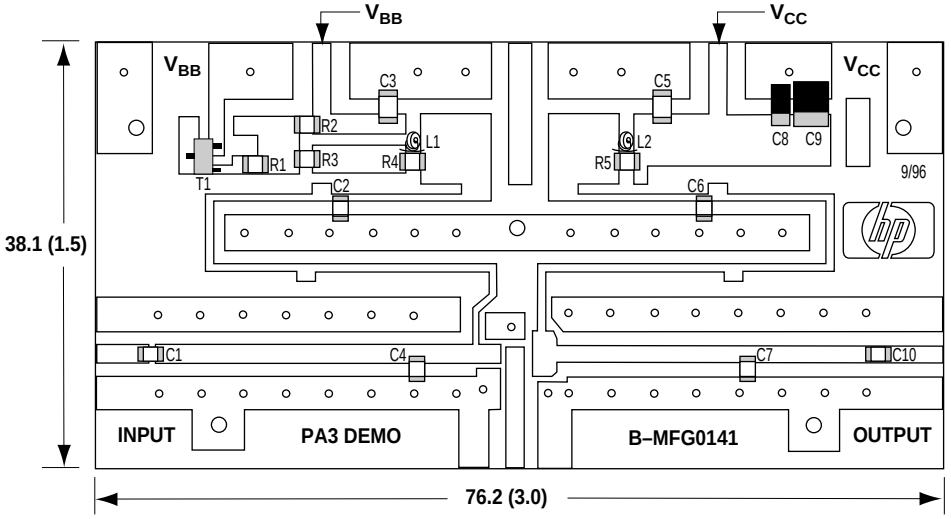

C1	100.0 pF
C2	100.0 pF
C3	100.0 nF
C4	7.5 pF
C5	100.0 nF
C6	100.0 pF
C7	5.1 pF
C8	1.5 µF
C9	10.0 µF
C10	100.0 pF
R1	2.2 Ω
R2	750.0 Ω
R3	2.2 Ω
R4	10.0 Ω
R5	10.0 Ω
T1	MBT 2222A
L1	18.0 µH
L2	18.0 µH

CW Test
V_{CE} = 4.8 V
I_{CQ} = 6.0 mA
Freq. = 900 MHz

Test Circuit:
FR-4 Microstrip, glass epoxy board
Dielectric Constant = 4.5
Thickness = 0.79 (.031)

NOTE:
Dimensions are shown in millimeters (inches).

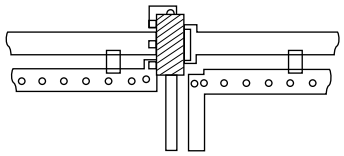

Test Circuit A: Test Circuit Schematic Diagram @ 900 MHz (ETACS/ISM)

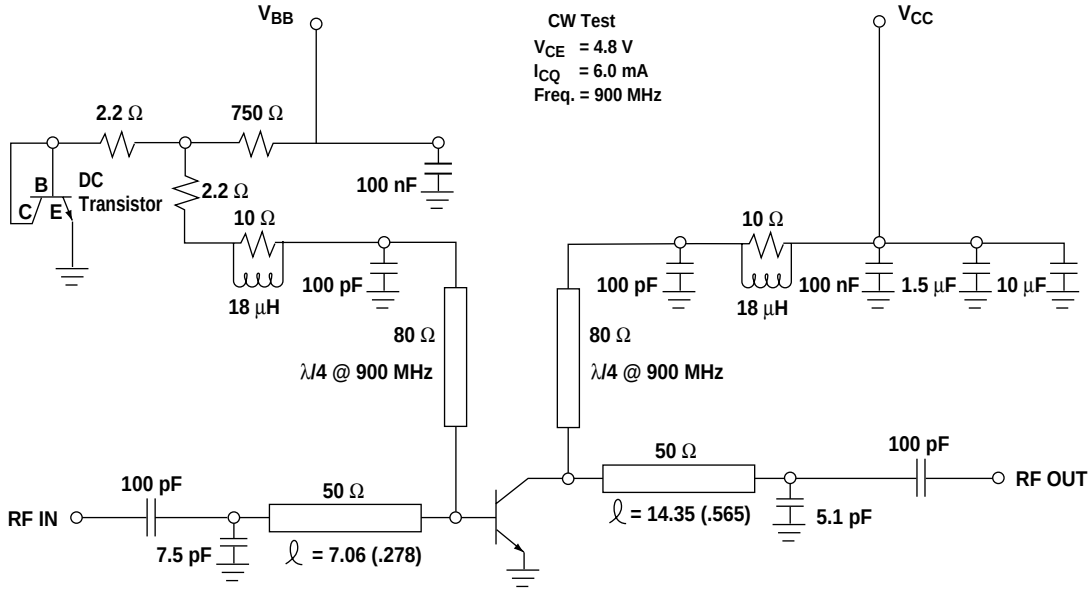

Test Circuit B: Test Circuit Board Layout @ 836.5 MHz (AMPS)

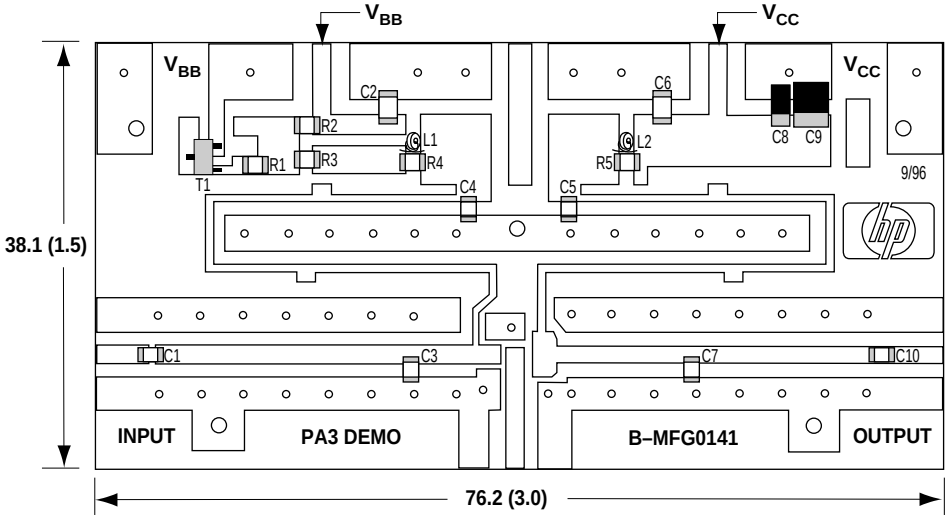

C1	100.0 pF
C2	100.0 nF
C3	9.5 pF
C4	100.0 pF
C5	100.0 pF
C6	100.0 nF
C7	6.8 pF
C8	1.5 µF
C9	10.0 µF
C10	100.0 pF
R1	2.2 Ω
R2	750.0 Ω
R3	2.2 Ω
R4	10.0 Ω
R5	10.0 Ω
T1	MBT 2222A
L1	18.0 µH
L2	18.0 µH

CW Test
V_{CE} = 4.8 V
I_{CQ} = 6.0 mA
Freq. = 836.5 MHz

Test Circuit:
FR-4 Microstrip, glass epoxy board
Dielectric Constant = 4.5
Thickness = 0.79 (.031)

NOTE:
Dimensions are shown in millimeters (inches).

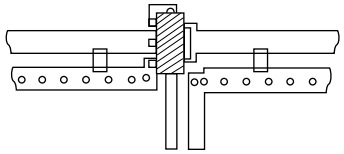

Test Circuit B: Test Circuit Schematic Diagram @ 836.5 MHz (AMPS)

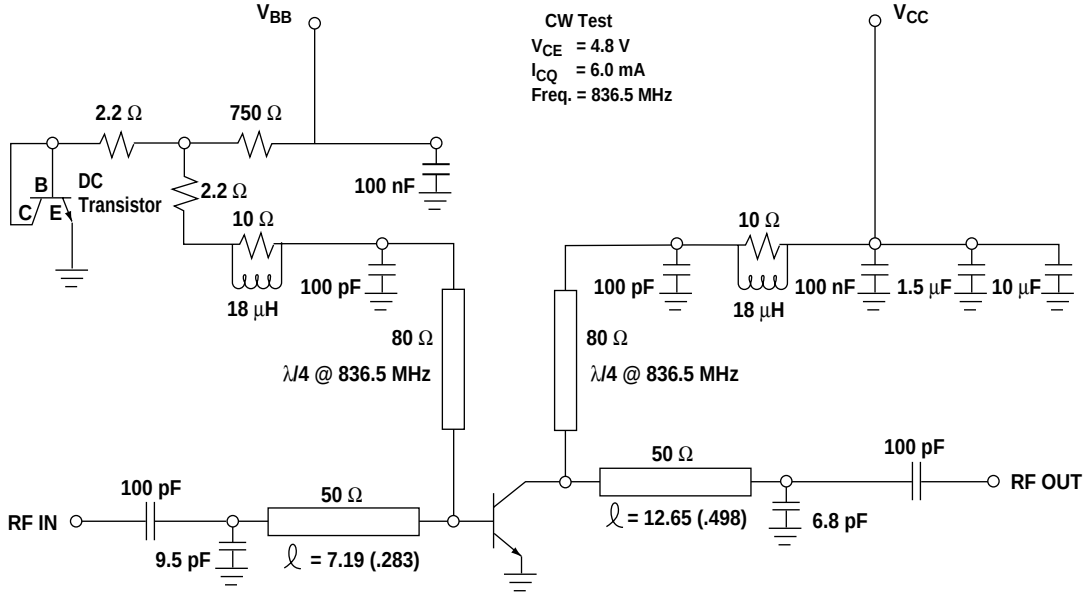

Part Number Ordering Information

Part Number	No. of Devices	Container
AT-33225-TR1	1000	7" Reel
AT-33225-BLK	25	Carrier Tape

Package Dimensions

MSOP-3 Surface Mount Plastic Package

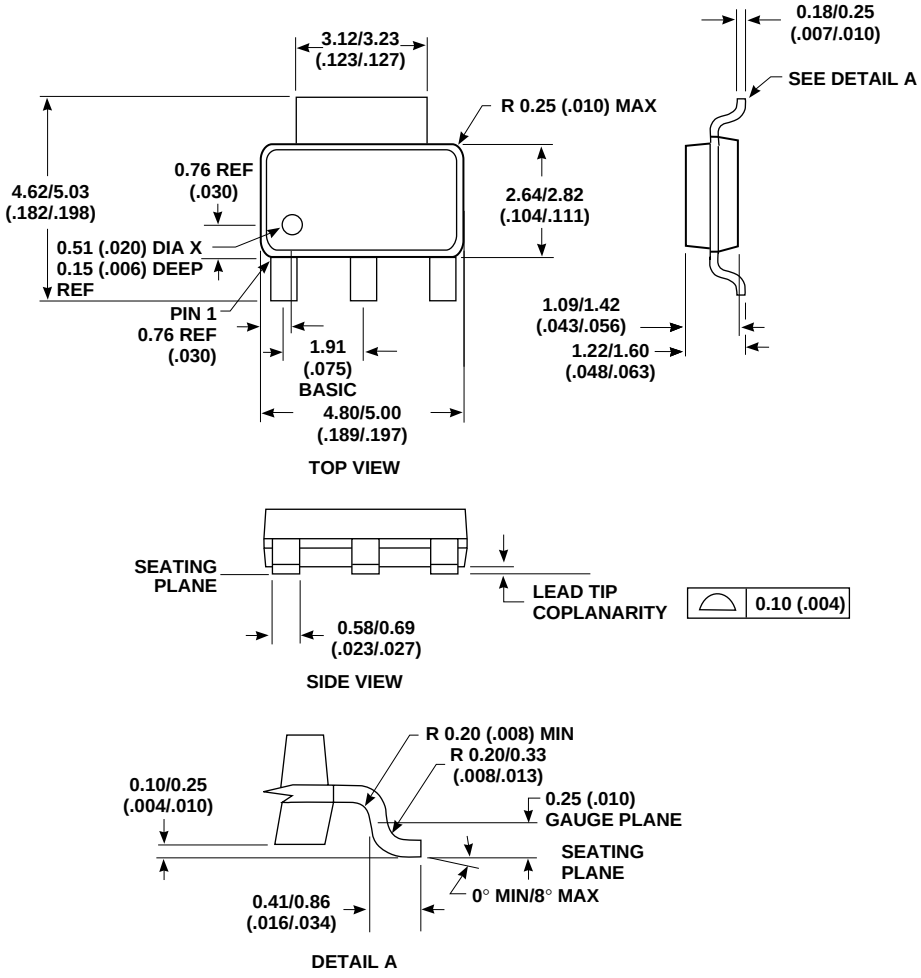

NOTE:
DIMENSIONS ARE SHOWN IN MILLIMETERS (INCHES)

Tape Dimensions and Product Orientation for Package MSOP-3

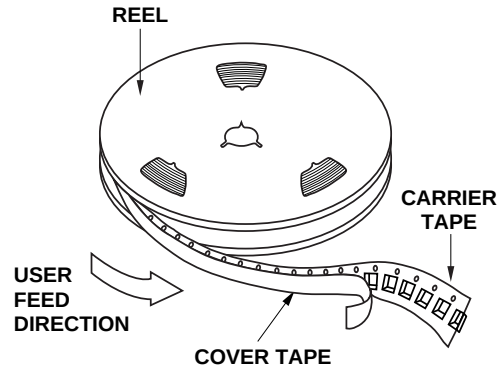

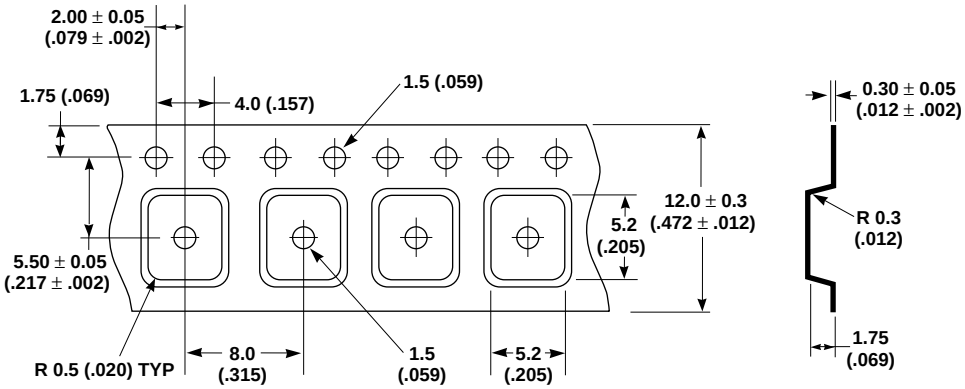

NOTES:
1. DIMENSIONS ARE SHOWN IN MILLIMETERS (INCHES)
2. TOLERANCES: .X ± 0.1 (.XXX ± .004)