SPECIFICATIONS

PARAMETERS	VALUES	UNITS
RATED VOLTAGE	12	Vp-p
OPERATING VOLTAGE RANGE	3 ~ 18	Vp-p
RATED CURRENT (MAX)	30	mA
CAPACITANCE	30,000 ± 20%	pF
MINIMUM SPL @ 10 CM	90	dBA
RESONANT FREQUENCY	3,700 ± 500	Hz
OPERATING TEMPERATURE	-20 ~ +70	°C
STORAGE TEMPERATURE	-30 ~ +80	°C
HOUSING MATERIAL	PBT	-
TERMINAL MATERIAL	Sn PLATED COPPER	-
WEIGHT	5	grams

THIS DOCUMENT CONTAINS DATA PROPRIETARY TO PROJECTS UNLIMITED, INC. ANY USE OR REPRODUCTION, IN ANY FORM, WITHOUT PRIOR WRITTEN PERMISSION OF PROJECTS UNLIMITED, INC. IS PROHIBITED.
©2003, Projects Unlimited Inc.

REVISION HISTORY

LTR	DESCRIPTION	DATE	APPROVED
-	RELEASED FROM ENGINEERING	6/30/2006	
A	REVISED TO INVENTOR 3-D DRAWING TEMPLATE	8/20/2008	B.R.

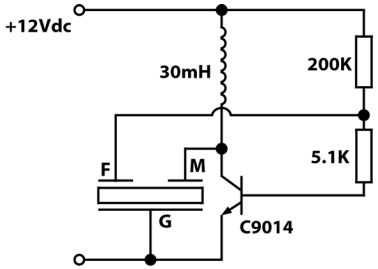

CIRCUIT

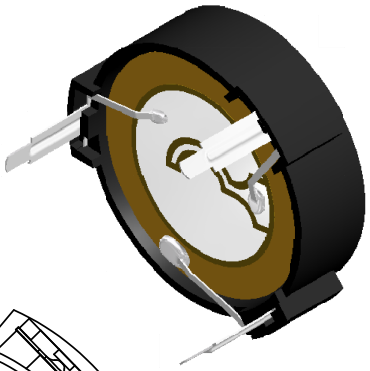

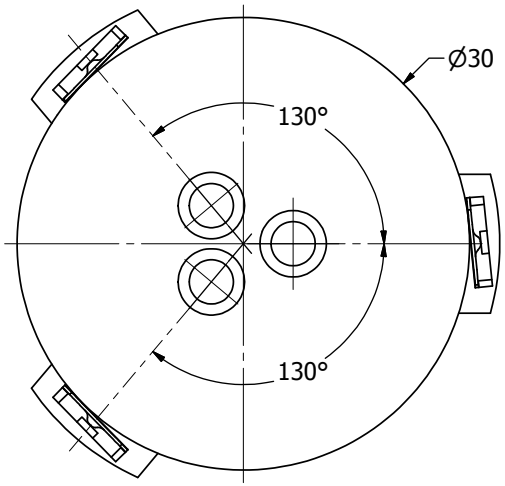

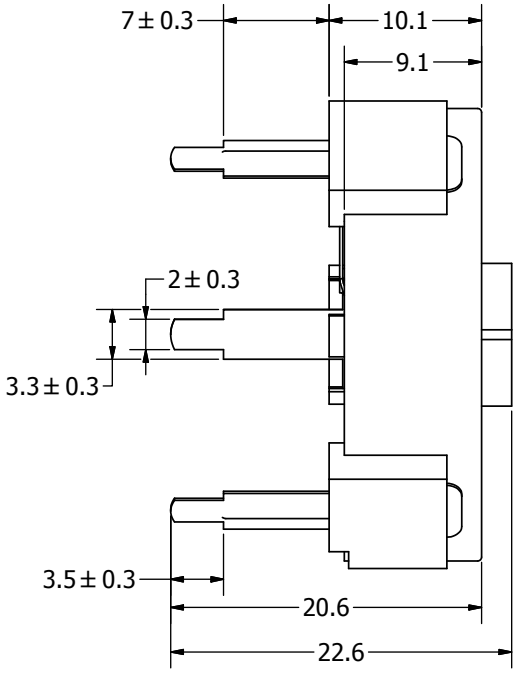

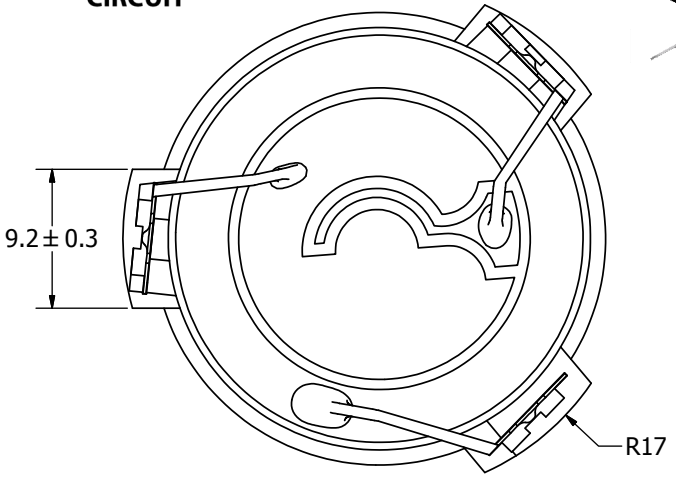

NOTES:

1. ALL DIMENSIONS ARE IN MILLIMETERS.
2. SPECIFICATIONS SUBJECT TO CHANGE OR WITHDRAWL WITHOUT NOTICE.
3. THIS PART IS RoHS 2002/95/EC COMPLIANT.

UNLESS OTHERWISE SPECIFIED: DIMENSIONS ARE IN MILLIMETERS, TOLERANCES ARE ±0.5 AND ANGLES ARE ±3°.	SIZE	Designed by	Date	Checked by	Date	Approved by	Date	Drawn Date
	A3	J.D.	6/30/2006	E.P.	6/30/2006	B.R.	6/30/2006	8/20/2008

AT-3037-TT-R.idw

pui audio inc
a projects unlimited company

AT-3037-TT-R

Transducer (Piezo)

Edition	Sheet
-	1 / 1