Digital Attenuator, 28 dB, 3-Bit
DC - 2 GHz

AT-230

Features

- Attenuation 4-dB Steps to 28 dB
- High Accuracy +/- 3%
- Low DC Power Consumption: 50 µW
- Low Intermodulation Product: +50 dBm IP_3
- Temperature Range: -40˚C to +85˚C
- Low Cost SOIC14 Plastic Package
- Tape and Reel Packaging Available[1]

Description

M/A-COM's AT-230 is a 3-bit, 4-dB step GaAs MMIC digital attenuator in a low cost SOIC 14-lead surface mount plastic package. The AT-230 is ideally suited for use where high accuracy, fast switching, very low power consumption and low intermodulation products are required. Typical applications include radio and cellular equipment, wireless LANs, GPS equipment and other Gain/Level Control circuits.

The AT-230 is fabricated with a monolithic GaAs MMIC using a mature 1-micron process. The process features full chip passivation for increased performance and reliability.

SO-14

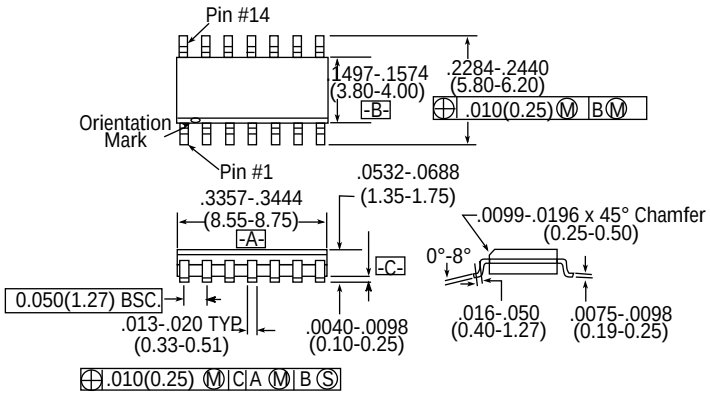

14-Lead SOP outline dimensions
Narrow body .150
(All dimensions per JEDEC No. MS-012-AB, Issue C)
Dimensions in ( ) are in mm.

Ordering Information

Part Number	Package
AT-230 PIN	SOIC 14-Lead Plastic
AT-230TR	Forward Tape & Reel
AT-230RTR	Reverse Tape & Reel

* If specific reel size is required, consult factory for part number assignment.

Electrical Specifications[1], T_A = +25°C

Parameter	Test Conditions		Unit	Min.	Typ.	Max
Reference Insertion Loss		DC – 0.1 GHz	dB		1.2	1.4
		DC – 0.5 GHz	dB		1.5	1.7
		DC – 1.0 GHz	dB		1.6	1.8
		DC – 2.0 GHz	dB		1.8	2.1
Attenuation Accuracy		DC – 1.0 GHz	± (0.15 dB +3% of Attenuation Setting in dB) dB			
		DC – 2.0 GHz	± (0.30 dB +3% of Attenuation Setting in dB) dB			
VSWR					1.2:1	
Trise, Tfall	10% to 90% RF, 90% to 10% RF		nS		12	
Ton, Toff	50% Control to 90% RF, 50% Control to 10% RF		nS		18	
Transients	In Band		mV		25	
1 dB Compression	Input Power	0.05 GHz	dBm		20	
	Input Power	0.5 – 2.0 GHz	dBm		28	
IP_2	Measured Relative to Input Power (for two-tone input power up to +5 dBm)	0.05 GHz	dBm		45	
		0.5 – 2.0 GHz	dBm		68	
IP_3	Measured Relative to Input Power (for two-tone input power up to +5 dBm)	0.05 GHz	dBm		40	
		0.5 – 2.0 GHz	dBm		50	

1. All measurements at 1 GHz in a 50Ω system, unless otherwise specified.

Absolute Maximum Ratings[1]

Parameter	Absolute Maximum
Max. Input Power	
50 MHz	+27 dBm
500-2000 MHz	+34 dBm
Control Voltage	+5 V, -8.5 V
Operating Temperature	-40°C to +85°C
Storage Temperature	-65°C to +150°C

1. Operation of this device above any one of these parameters may cause permanent damage

Functional Schematic

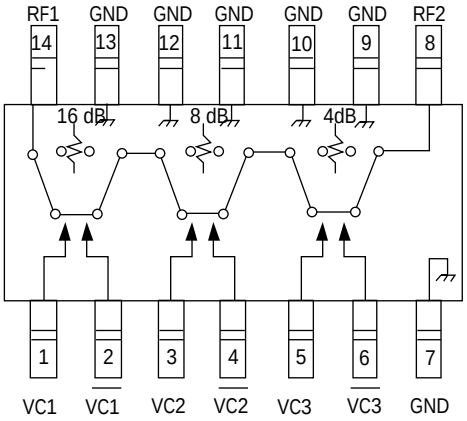

Truth Table

Control Input						
$\overline{VC3}$	VC3	$\overline{VC2}$	VC2	$\overline{VC1}$	VC1	Atten (dB)
1	0	1	0	1	0	Reference
0	1	1	0	1	0	4 dB
1	0	0	1	1	0	8 dB
1	0	1	0	0	1	16 dB
0	1	0	1	0	1	28 dB

0 = VIN Low = 0 V to -0.2 V @ 20 *A maximum
1 = VIN High = -5 V @ 10 *A typ. to -8 V @ 200 *A maximum

Typical Performance

INSERTION LOSS vs FREQUENCY

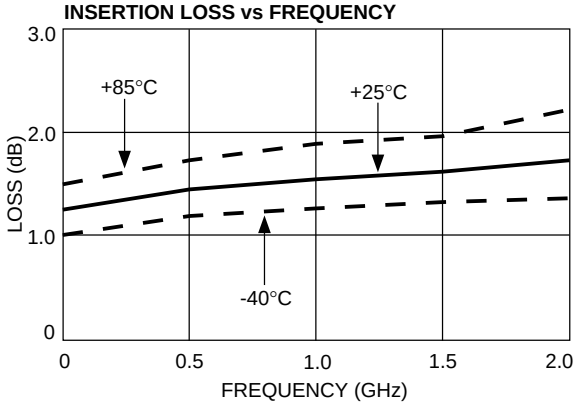

ATTENUATION ACCURACY vs FREQUENCY

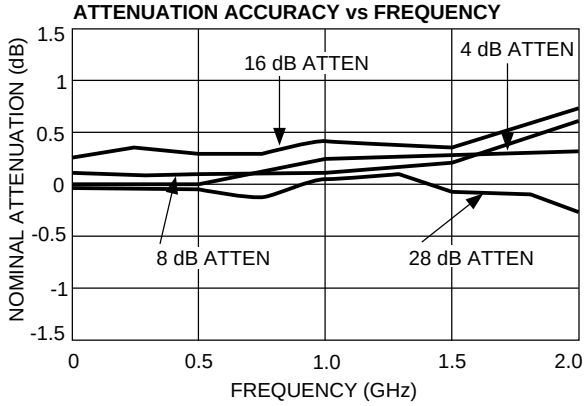

VSWR vs FREQUENCY

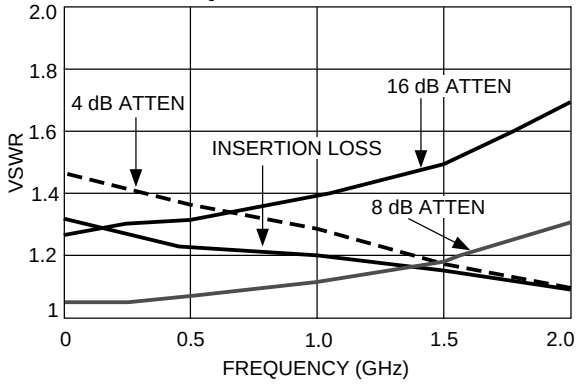

ATTENUATION vs FREQUENCY

