SPECIFICATIONS

PARAMETERS	VALUES	UNIT
RATED VOLTAGE	12	Vp-p
OPERATING VOLTAGE RANGE	9 ~ 15	Vp-p
RATED CURRENT (MAX)	40	mA
COIL RESISTANCE	115 ± 12	OHM
MINIMUM SPL @ 10 CM	85	dBA
RESONANT FREQUENCY	2,048 ± 500	Hz
OPERATING TEMPERATURE	-40 ~ +85	°C
STORAGE TEMPERATURE	-30 ~ +80	°C
HOUSING MATERIAL	NORYL	-
TERMINAL MATERIAL	Sn PLATED COPPER	-
WEIGHT	5	grams

THIS DOCUMENT CONTAINS DATA PROPRIETARY TO PROJECTS UNLIMITED, INC. ANY USE OR REPRODUCTION, IN ANY FORM, WITHOUT PRIOR WRITTEN PERMISSION OF PROJECTS UNLIMITED, INC. IS PROHIBITED.

ALL PURCHASES ARE SUBJECT TO THE PUI AUDIO TERMS AND CONDITIONS SALE FOUND AT http://www.puiaudio.com/pdf/terms_conditions.pdf (paper copy available upon request).

©2003, Projects Unlimited Inc.

REVISION HISTORY

LTR	DESCRIPTION	DATE	APPROVED
-	RELEASED FROM ENGINEERING	12/31/2003	
A	ADDED DIMENSIONS	8/27/2004	R.W.
B	REMOVED LEAD FREE ADDED RoHS NOTE	8/10/2005	
C	REVISED TERMINAL MATERIAL	3/21/2006	
D	REVISED TERMINAL LENGTH	4/17/2008	B.R.
E	REVISED TO INVENTOR 3-D DRAWING TEMPLATE	4/17/2008	B.R.
F	REVISED OPERATING TEMPERATURE	7/23/2015	M.L.

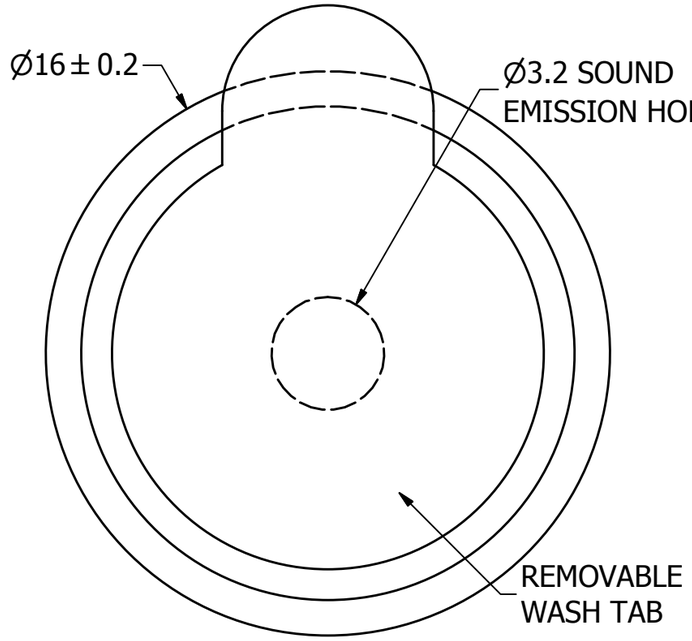

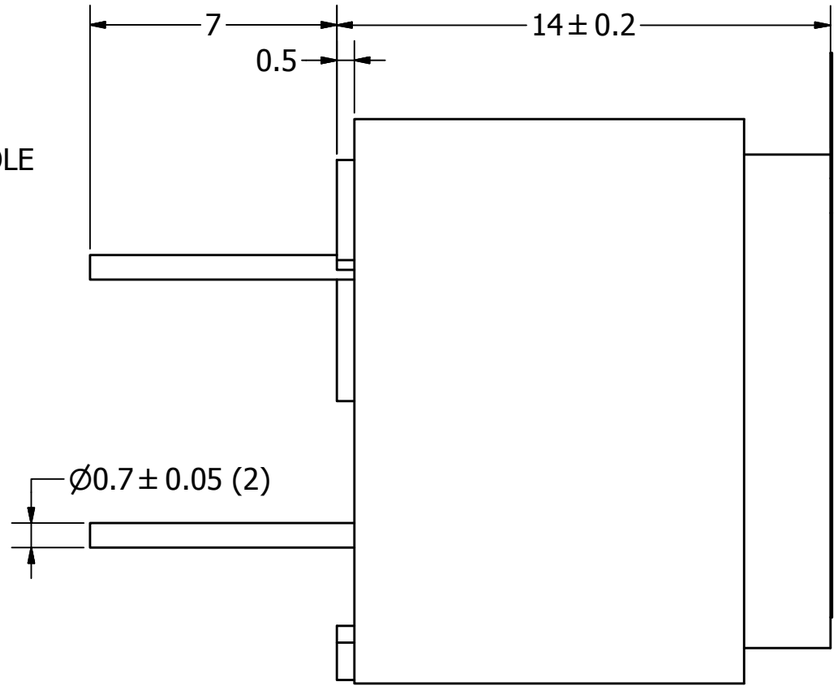



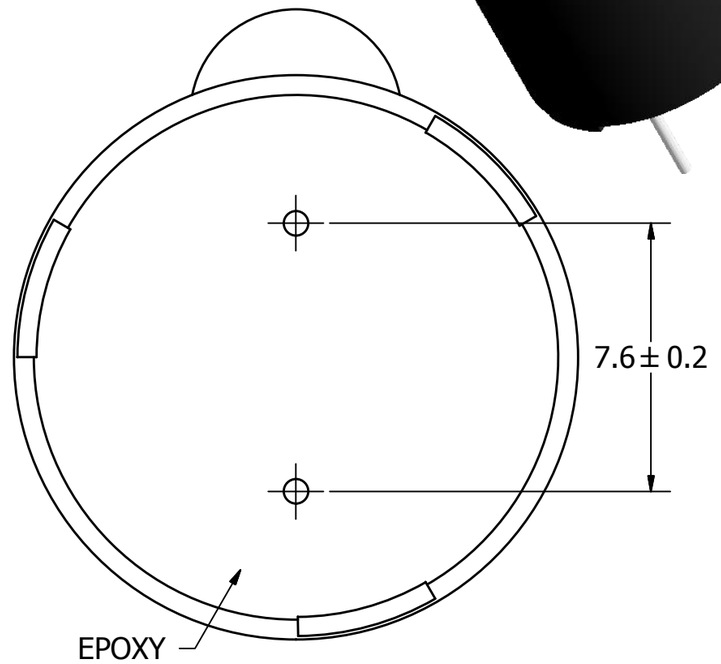

NOTES:

1. ALL DIMENSIONS ARE IN MILLIMETERS.
2. SPECIFICATIONS SUBJECT TO CHANGE OR WITHDRAWL WITHOUT NOTICE.
3. THIS PART IS RoHS 2011/65/EU COMPLIANT.

UNLESS OTHERWISE SPECIFIED: DIMENSIONS ARE IN MILLIMETERS, TOLERANCES ARE ±0.5 AND ANGLES ARE ±3°.	SIZE	Designed by	Date	Checked by	Date	Approved by	Date	Drawn Date
		R.A.C.	8/13/2004			R.W.	8/13/2004	4/17/2008

AT-1620-TWT-12V-R.idw	pui audio inc — a projects unlimited company	AT-1620-TWT-12V-R		
		Transducer (Electro-Mech)	Edition -	Sheet 1 / 1