SMD VC/TCXO

ASTX-11, ASVTX-11

ESD Sensitive

RoHS/RoHS II compliant



3.2 X 2.5 X 0.9mm

Moisture Sensitivity Level (MSL) – This product is Hermetically Sealed and not Moisture Sensitive - MSL = N/A: Not Applicable

FEATURES:

- 3.2 x 2.5 x 0.9mm miniature package
- Low current consumption 1.5mA for 19.68MHz
- Vc function corresponds to PLL circuits
- Suitable for RoHS reflow profile

APPLICATIONS:

- Cellular and cordless phones
- Standard OSC for exact equipment
- Mobile com munication equipment
- Portable radio equipment and music player.
- PLL

STANDARD SPECIFICATIONS:

Parameters	Minimum	Typical	Maximum	Units	Notes
Frequency Range	10		40	MHz	
Standard Frequencies:	10, 13, 14.4, 16.3676, 19.2, 19.8, 20, 24.5535, 26, 33.6, 38.4, 39, 40			MHz	
Operating Temperature:	-30		+75	°C	
Storage Temperature:	-40		+85	°C	
Frequency Stability Δf/f0 vs Tolerance (@+25°C) at shipping:	-0.5		+0.5	ppm	
Tolerance (@+25°C) after reflow:	-1.5		+1.5	ppm	
Temperature (ref. to +25°C):	-2.5		+2.5		See option (Tabel 1)
Supply Voltage Change (Vdd±5%):	-0.2		+0.2		
Load Change (ZL±10%):	-0.2		+0.2		
Supply Voltage (Vdd):	+3.135	+3.3	+3.465	V	See option
Aging (first year @+25°C):	-1.0		+1.0	ppm	
Supply Current (Icc):			1.5	mA	~19.68MHz
			2.0	mA	~32.00MHz
			2.5	mA	~40.00MHz
Voltage Control Function (for ASVTX-11) Control Voltage (Vcc): Frequency Tuning Range: Frequency Tuning Transition: Input Impedance:	 +0.5 ±8 Positive 500	 +1.5 650	 +2.5	 Vdc ppm kΩ	
Output					
Voltage:	0.8			Vp-p	
Load:	10kΩ//10pF				
Waveform:	Clipped Sine Wave				
Phase Noise:		-135		dBc	@1kHz

30332 Esperanza, Rancho Santa Margarita, California 92688
tel 949-546-8000 | fax 949-546-8001 | www.abracon.com

SMD VC/TCXO

ASTX-11, ASVTX-11

ESD Sensitive

Pb RoHS/RoHS II compliant



3.2 X 2.5 X 0.9mm

OPTIONS & PART IDENTIFICATION:

ASVTX-11 or ASTX-11 - [ ] - [ ] MHz - [ ] - [ ]

Vdd (V)
Blank: 3.3V±5%
A: 3.0V±5%
B: 2.8V±5%
C: 2.5V±5%

Frequency in MHz
Please specify the frequency in MHz. e.g. 19.200MHz

Packaging
Blank: Bulk
T: 1000pcs/reel
T3: 3000pcs/reel

Table 1: Frequency Stability vs Operating Temperature

	±1.5ppm	±2ppm	±2.5ppm	±3ppm	±4ppm	±5ppm
0°C ~ +50°C	D15	D20	D25	D30	D40	D50
-10°C ~ +60°C	E15	E20	E25	E30	E40	E50
-20°C ~ +70°C	F15	F20	F25	F30	F40	F50
-30°C ~ +70°C	G15	G20	G25	G30	G40	G50
-30°C ~ +75°C	H15	H20	Std.(Blank)	H30	H40	H50
-40°C ~ +85°C	I15	I20	I25	I30	I40	I50

OUTLINE DRAWING:

6-pad package (Date Code prior to March 2014):

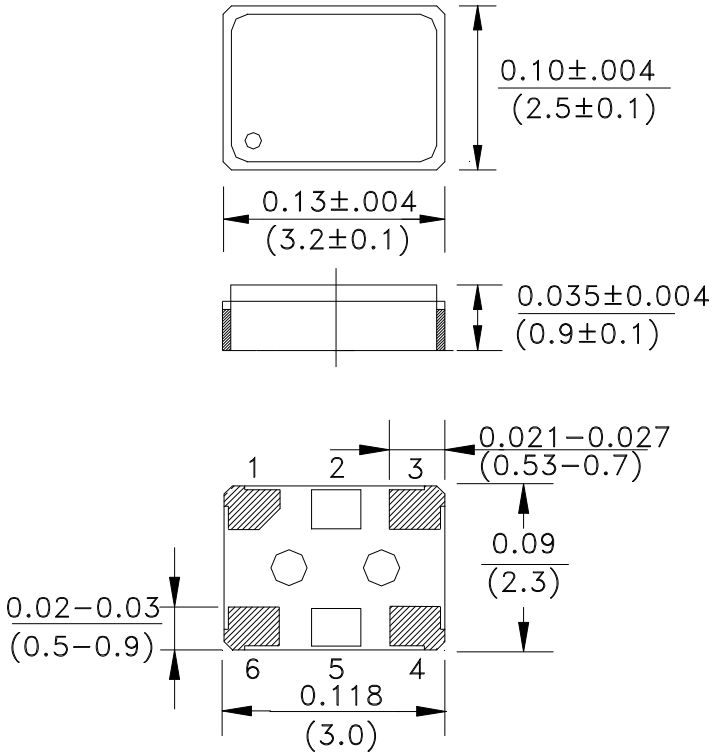

Dimensions: Inches (mm)

Recommended land pattern

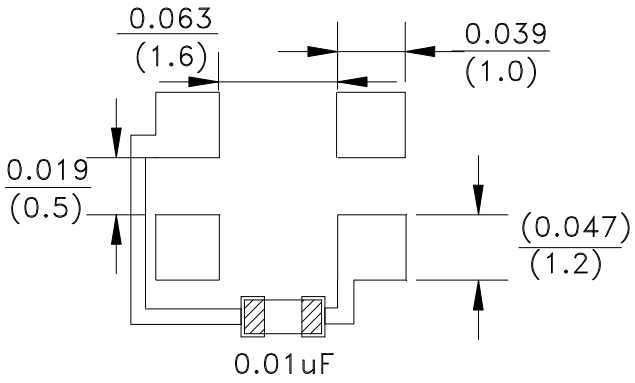

Note 1: It is not recommended that paths go underneath the oscillator. If needed, please use multi-layer PCB board or resist coating.

Note 2: Recommend using an approximately 0.01µF bypass capacitor between Pin 3 and 6.

Pin	Function	
	ASVTX-11	ASTX-11
1	Vc	GND
2	N.C.	
3	GND	
4	Output	
5	N.C.	
6	Vdd	

30332 Esperanza, Rancho Santa Margarita, California 92688
tel 949-546-8000 | fax 949-546-8001 | www.abracon.com

SMD VC/TCXO

ASTX-11, ASVTX-11

ESD Sensitive

RoHS/RoHS II compliant



3.2 X 2.5 X 0.9mm

OUTLINE DRAWING:

4-pad package (Date Code March 2014 and later):

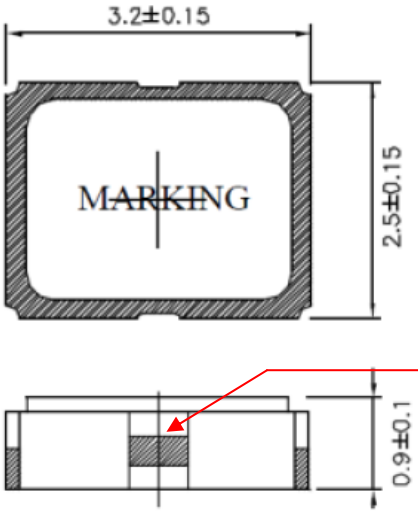

Due to material availability, 1 or 2 side pads may appear on the side of the package The variation in no way affects the electrical performance of the product.

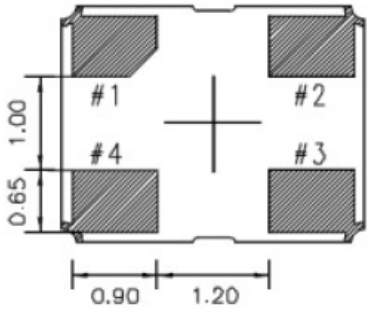

Pin	Function	
	ASVTX-11	ASTX-11
1	Vc	GND
2	GND	
3	Output	
4	Vdd	

Recommended Land Pattern

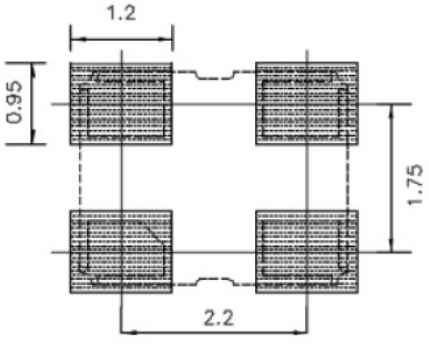

Note 1: It is not recommended that paths go underneath the oscillator. If needed, please use multi-layer PCB board or resist coating.

Note 2: Recommend using an approximately 0.01µF bypass capacitor between Pin 2 and 4.

Dimensions: mm

30332 Esperanza, Rancho Santa Margarita, California 92688
tel 949-546-8000 | fax 949-546-8001 | www.abracon.com

SMD VC/TCXO

ASTX-11, ASVTX-11

ESD Sensitive

Pb RoHS/RoHS II compliant



3.2 X 2.5 X 0.9mm

REFLOW PROFILE:

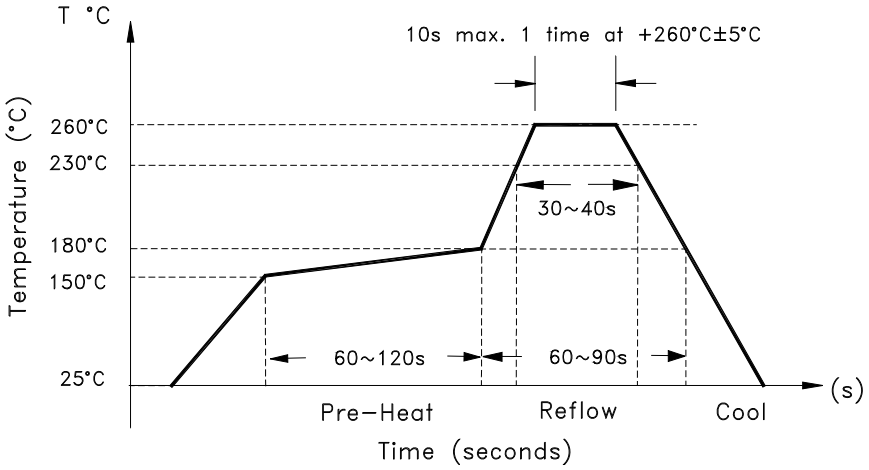

TAPE & REEL:

T: 1000pcs/reel

T3: 3000pcs/reel

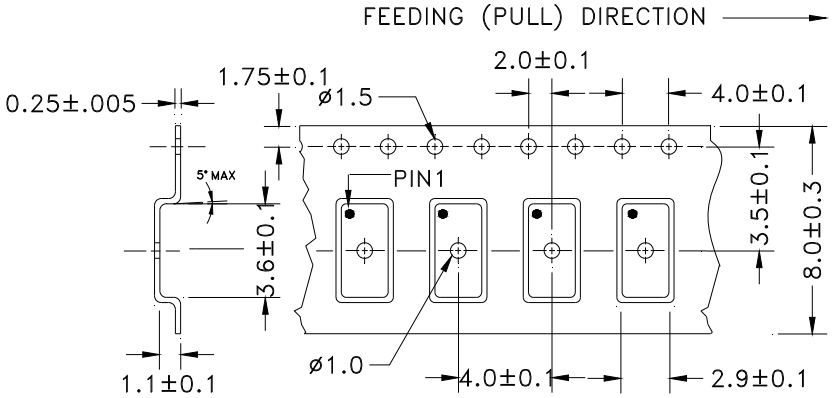

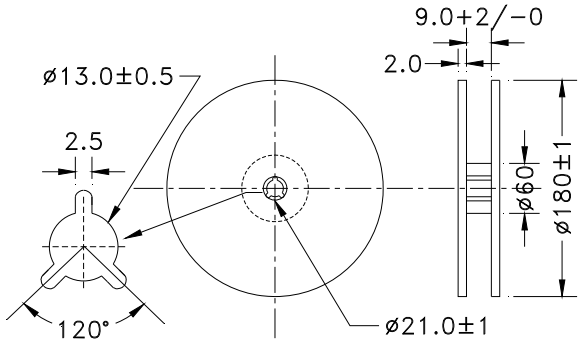

Dimensions: mm

ATTENTION: Abracon Corporation's products are COTS – Commercial-Off-The-Shelf products; suitable for Commercial, Industrial and, where designated, Automotive Applications. Abracon's products are not specifically designed for Military, Aviation, Aerospace, Life-dependant Medical applications or any application requiring high reliability where component failure could result in loss of life and/or property. For applications requiring high reliability and/or presenting an extreme operating environment, written consent and authorization from Abracon Corporation is required. Please contact Abracon Corporation for more information.

30332 Esperanza, Rancho Santa Margarita, California 92688
tel 949-546-8000 | fax 949-546-8001 | www.abracon.com