LOW PROFILE SHIELDED SMD CHIP POWER INDUCTOR



3.0 x 3.0 x 1.2mm

ASPI-0312FSSA

Pb RoHS Compliant

FEATURES:

- Small size and low profile: 1.2mm
- Small DCR and high rated current
- High reliability to mechanical stress
- Magnetically shielded by magnetic powder molding
- Suitable for RoHS reflow profile

APPLICATIONS:

- Mobile phones
- MP3 & 4 and other portable communication equipment
- Digital cameras.

ELECTRICAL SPECIFICATIONS:

Abracon P/N:	ASPI-0312FSSA Series
Operating Temperature & Humidity :	-30°C to +100°C, 5% to 85% RH
Storage Temperature & Humidity:	-20°C to +60°C, 5% to 85% RH

Part Number	Inductance	DCR	Saturation Current	Temperature Rise Current	Marking
Units	µH±20%	mΩ±20%	A	A	-
Symbol	L	DCR	Isat*	Irms*	-
ASPI-0312FSSA-2R0M	2.0	69	1.55	1.35	2R0
ASPI-0312FSSA-3R3M	3.3	100	1.20	1.10	3R3
ASPI-0312FSSA-4R7M	4.7	130	1.00	1.00	4R7
ASPI-0312FSSA-6R8M	6.8	210	0.84	0.80	6R8
ASPI-0312FSSA-100M	10.0	290	0.73	0.70	100
ASPI-0312FSSA-220M	22.0	700	0.43	0.40	220

***The rated current is subject to change depending upon the temperature cooling condition.**

Test Conditions

Inductance: 100kHz, 0.3V, Ta=20˚C
DCR: Ta=20˚C
Isat: ΔL/L (initial) ≥ -30%
Irms: ΔT ≤ 40˚C

OPTIONS AND PART IDENTIFICATION

ASPI-0312FSSA - [ ] - [ ]

Inductance Code
Please refer to the table above

Packaging
T: Tape and Reel (1kpcs / reel)
T4: Tape and Reel (4kpcs / reel)

30332 Esperanza, Rancho Santa Margarita, California 92688
tel 949-546-8000 | fax 949-546-8001 | www.abracon.com

LOW PROFILE SHIELDED SMD CHIP POWER INDUCTOR



3.0 x 3.0 x 1.2mm

ASPI-0312FSSA

Pb RoHS Compliant

OUTLINE DRAWING:

Mechanical Dimensions

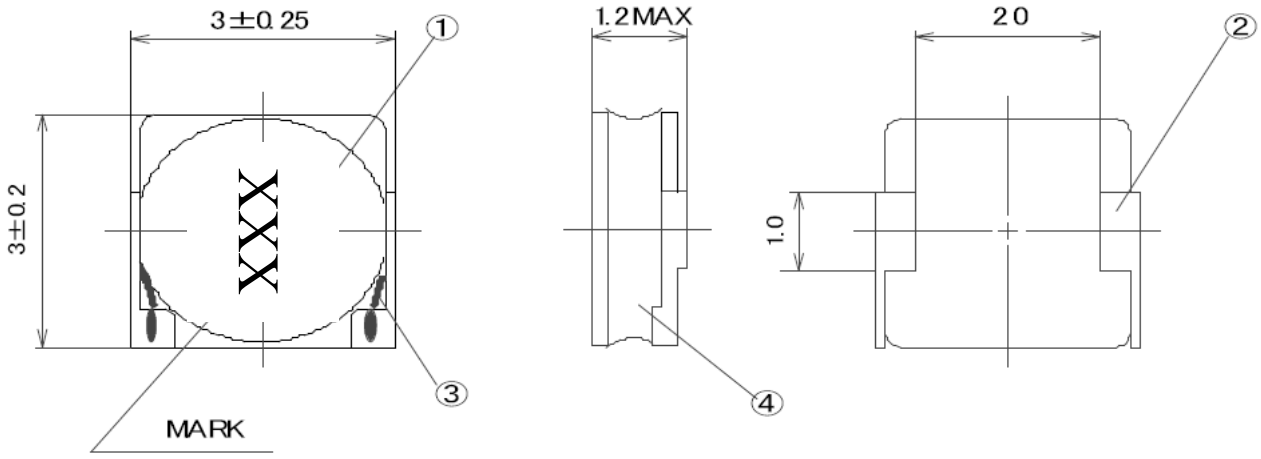

Circuit Schematic

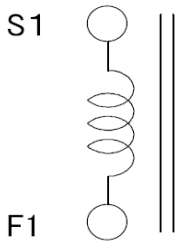

Recommended Land Pattern

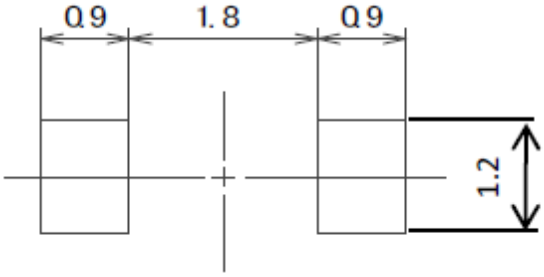

No	Part Name	Material
1	Drum core	Ni-Zn Ferrite
2	Terminals	Copper alloy, Sn
3	Coil	Cu/UEW
4	Adhesive	Epoxy base resin
	Magnetic powder	Ni-Zn Ferrite

Dimension: mm

30332 Esperanza, Rancho Santa Margarita, California 92688
tel 949-546-8000 | fax 949-546-8001 | www.abracon.com

LOW PROFILE SHIELDED SMD CHIP POWER INDUCTOR



3.0 x 3.0 x 1.2mm

ASPI-0312FSSA

Pb RoHS Compliant

TAPE & REEL:

T: 1,000pcs / reel
T4: 4,000pcs / reel

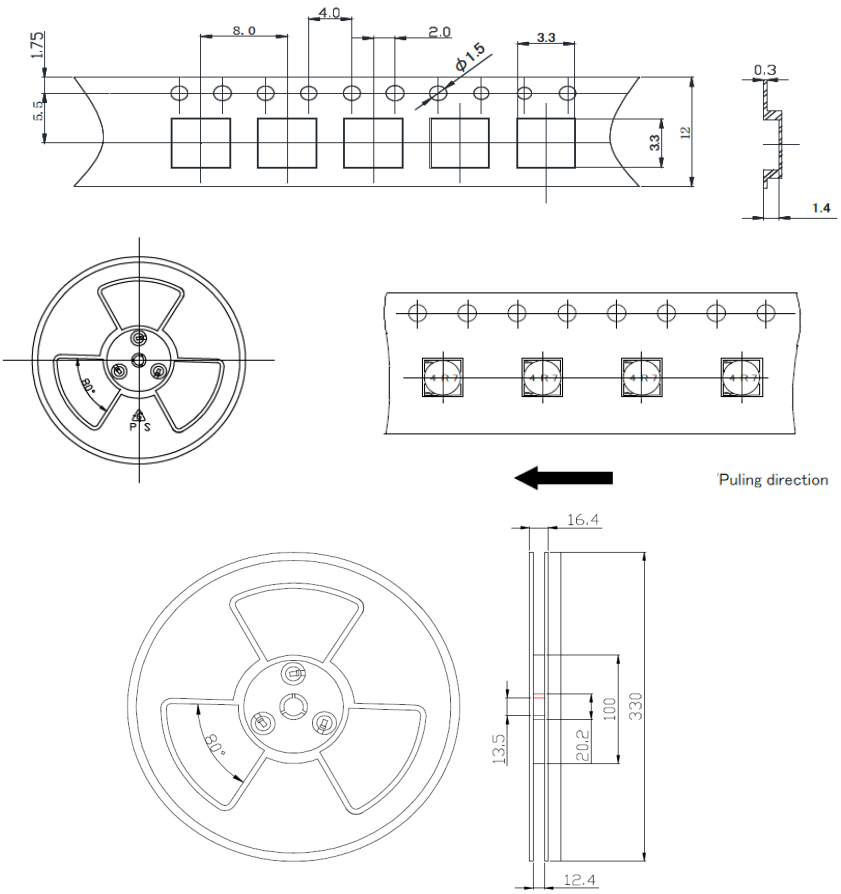

Dimension: mm

REFLOW PROFILE:

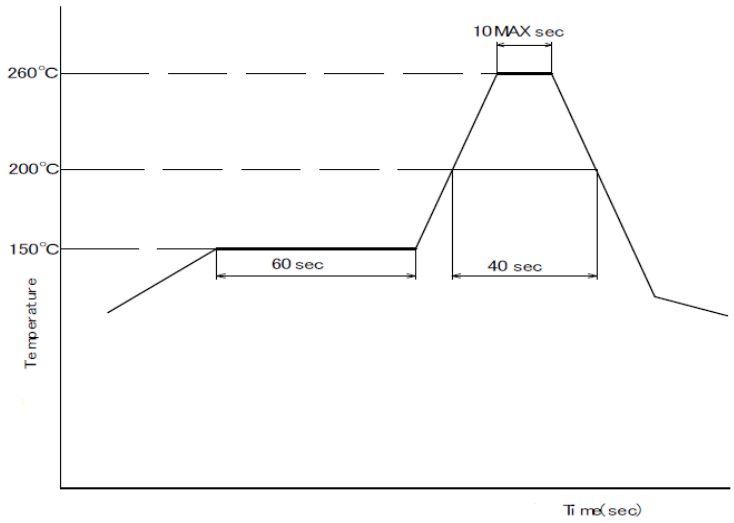

ATTENTION: Abracon Corporation's products are COTS – Commercial-Off-The-Shelf products; suitable for Commercial, Industrial and, where designated, Automotive Applications. Abracon's products are not specifically designed for Military, Aviation, Aerospace, Life-dependant Medical applications or any application requiring high reliability where component failure could result in loss of life and/or property. For applications requiring high reliability and/or presenting an extreme operating environment, written consent and authorization from Abracon Corporation is required. Please contact Abracon Corporation for more information.

30332 Esperanza, Rancho Santa Margarita, California 92688
tel 949-546-8000 | fax 949-546-8001 | www.abracon.com