ASMT-YTB7-0AA02

Tricolor PLCC6 Black Surface Mount LED

Data Sheet

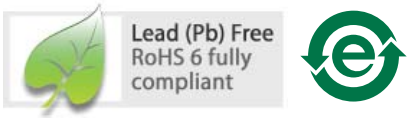

Description

This family of SMT LEDs packaged in the form of PLCC-6 with separate heat path for each LED dice, enabling it to be driven at higher current.

For easy pick & place, the LEDs are shipped in EIA-compliant tape and reel. Every reel is shipped from a single intensity and color bin; except red color for better uniformity.

These LEDs are compatible with reflow soldering process.

This super wide viewing angle at 120° together with the built in reflector pushing up the intensity of the light output makes these LED suitable to be used in the interior electronics signs.

The black top surface of the LED provides better contrast enhancement especially in the full color sign application.

Features

- Standard PLCC-6 package (Plastic Leaded Chip Carrier) with individual addressable pin-out for higher flexibility of driving configuration
- LED package with diffused silicone encapsulation
- Using AlInGaP and InGaN dice technologies
- Wide viewing angle at 120°
- Compatible with reflow soldering process
- JEDEC MSL 3
- Water-Resistance (IPX6*) per IEC 60529:2001
  - The test is conducted on component level by mounting the components on PCB with proper potting to protect the leads. It is strongly recommended that customers perform necessary tests on the components for their final application

Applications

- Indoor and outdoor full color display

CAUTION: *These LEDs are Class 1C ESD sensitive. Please observe appropriate precautions during handling and processing. Please refer to Avago Application Note AN-1142 for additional details.*

CAUTION: *Customer is advised to keep the LED in the MBB when not in use as prolonged exposure to environment might cause the silver plated leads to tarnish, which might cause difficulties in soldering.*

Package Dimensions

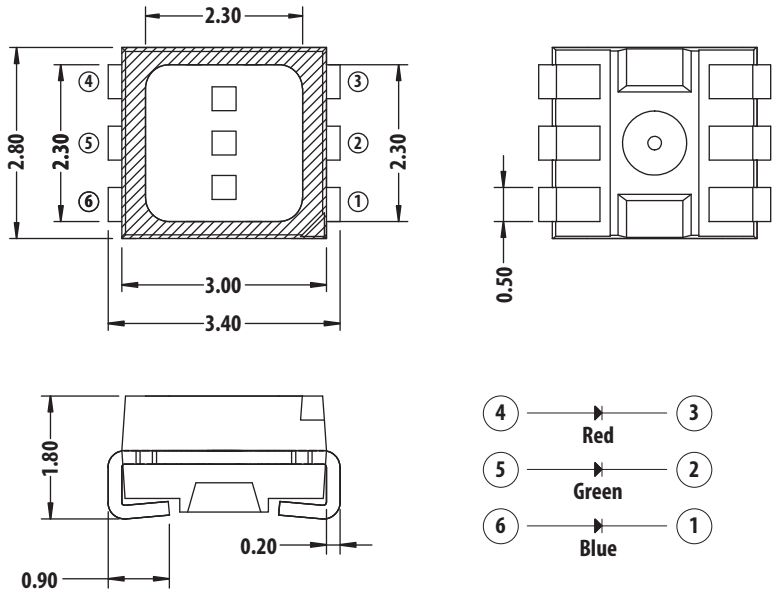

Lead Configuration

1	Cathode	Blue
2	Cathode	Green
3	Cathode	Red
4	Anode	Red
5	Anode	Green
6	Anode	Blue

Notes:
1. All Dimensions are in millimeters
2. Tolerance = ±0.2 mm unless otherwise specified
3. Terminal Finish: Ag plating
4. Encapsulantion material: silicone resin

Table 1. Device Selection Guide

	Color 1 - Red				Color 2 - Green				Color 3 - Blue			
	Min. Iv @20mA		Typ. Iv @20mA	Max Iv @ 20mA	Min. Iv @ 20mA		Typ. Iv @ 20mA	Max Iv @ 20mA	Min. Iv @ 20mA		Typ. Iv @ 20mA	Max Iv @ 20mA
Part Number	**Bin ID**	**(mcd)**	**(mcd)**	**(mcd)**	**Bin ID**	**(mcd)**	**(mcd)**	**(mcd)**	**Bin ID**	**(mcd)**	**(mcd)**	**(mcd)**
ASMT-YTB7-0AA02	U2	560	650	1125	W2	1400	1900	2850	T1	285	384	560

Notes:
1. The luminous intensity I_V, is measured at the mechanical axis of the LED package and it is tested in pulsing condition. The actual peak of the spatial radiation pattern may not be aligned with this axis.
2. Tolerance = ± 12 %

Part Numbering System

ASMT – Y T B7 – 0 X_2 X_3 X_4 X_5

Packaging Option
2: 20mA testing current

Color Bin Selection
0: Red (Full distribution) Green (A,B,C), Blue (A,B,C,D)

Number of half intensity bin
A: 3half intensity bin

Min Intensity Bin
A: Red U2 / Green W2/ Blue T1

Package Type
B: Black Surface Tricolor

Color
T: Tricolor

Product Family
Y: Silicon Based PLCC6

Table 2. Absolute Maximum Ratings (T_A = 25°C)

Parameter	Red	Green & Blue	Unit
DC forward current [1]	50	25	mA
Peak forward current [2]	100	100	mA
Power dissipation	125	90	mW
Maximum junction temperature Tj max	110		°C
Operating temperature range	- 40 to + 100 [3]		°C
Storage temperature range	- 40 to + 100		°C

Note:
1. Derate linearly as shown in Figure 4a & 4b
2. Duty Factor = 10% Frequency = 1KHz
3. Refer to Figure 4a and Figure 4b for more information

Table 3. Optical Characteristics (T_A = 25°C)

	Luminous Intensity, Iv, mcd [1]			Dominant Wavelength, λd (nm) [2]			Peak Wavelength, λp (nm)	Viewing Angle 2θ½ (°) [3]	Test Current
Color	Min	Typ	Max.	Min	Typ	Max	Typ.	Typ	(mA)
Red	560	650	1125	617	623	627	630	120	20
Green	1400	1900	2850	525	529	537	522	120	20
Blue	285	384	560	465	469	475	465	120	20

Notes:
1. The luminous intensity Iv is measured at the mechanical axis of LED package and it is tested in pulsing condition. The actual peak of the spatial radiation pattern may not be aligned with the axis.
2. The dominant wavelength is derived from the CIE Chromaticity Diagram and represents the perceived color of the device.
3. θ½ is the off axis angle where the luminous intensity is ½ the peak intensity

Table 4. Electrical Characteristics (T_A = 25°C)

	Forward Voltage, V_F (V) [1]			Reverse Voltage V_R @100μA [3]	Reverse Voltage V_R @10μA [3]	Thermal Resistance Rθ$_{J-P}$ (°C/W) [2]	Test Current
Color	Min	Typ.	Max.	Min	Min	Typ	(mA)
Red	1.80	2.10	2.50	4	-	280	20
Green	2.80	3.10	3.60	-	4	240	20
Blue	2.80	3.10	3.60	-	4	240	20

Note:
1. Tolerance ± 0.1V.
2. One chip on thermal resistance
3. Indicated product final testing condition, long term reverse bias is not recommended.

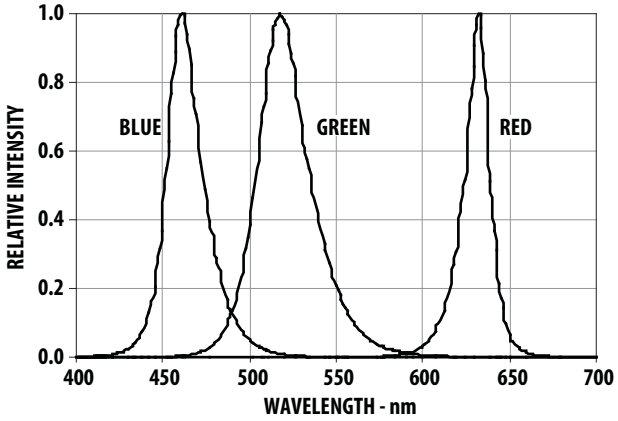

Figure 1. Relative Intensity vs Wavelength

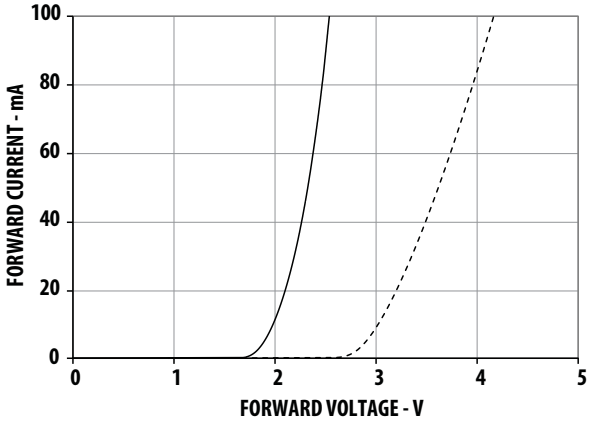

Figure 2. Forward Current –mA vs Forward Voltage

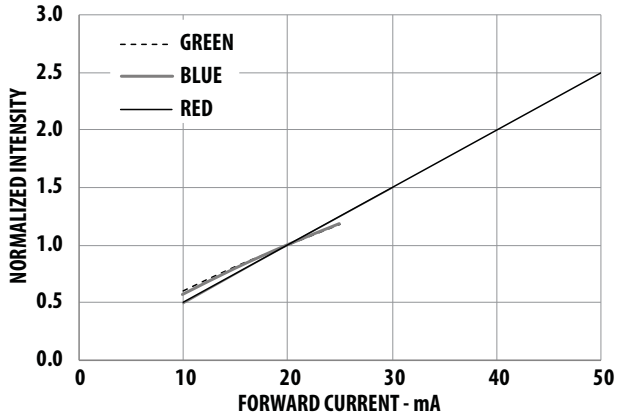

Figure 3. Relative Intensity vs Forward Current

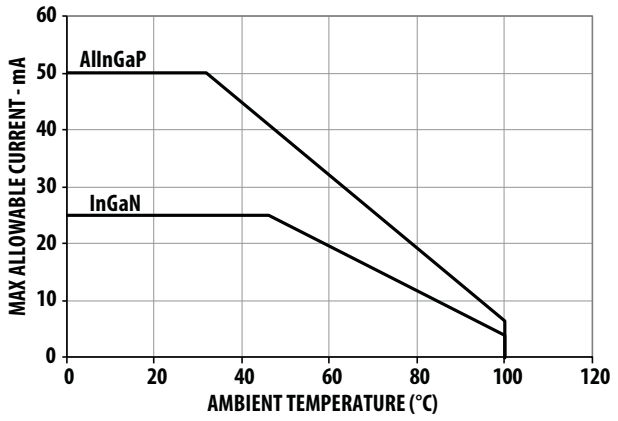

Figure 4a. Maximum forward current vs. ambient temperature. (3 chips)

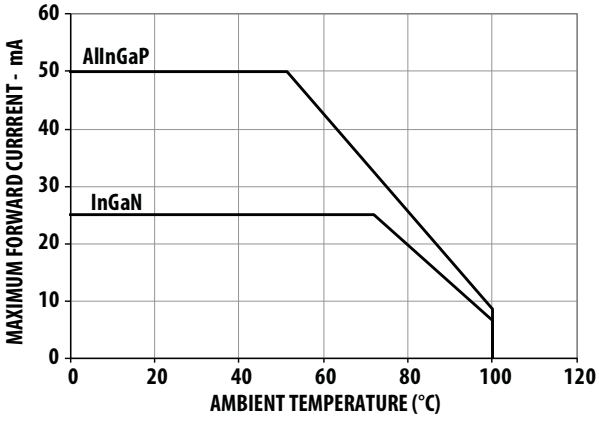

Figure 4b. Maximum forward current vs. ambient temperature. (single chip)

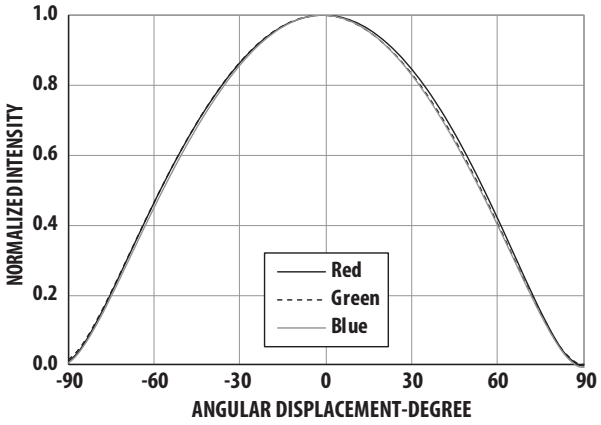

Figure 5a. Radiation Pattern for X axis

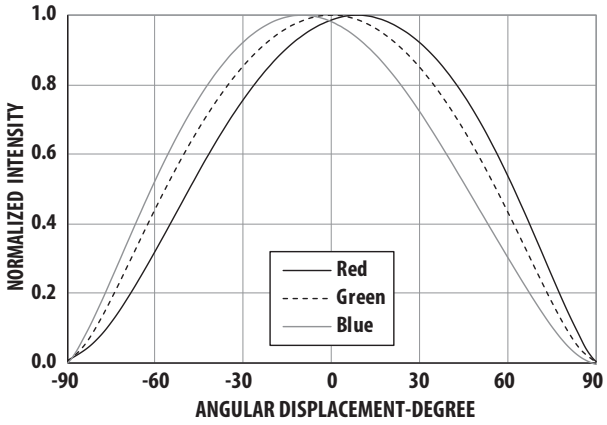

Figure 5b. Radiation Pattern for Y axis

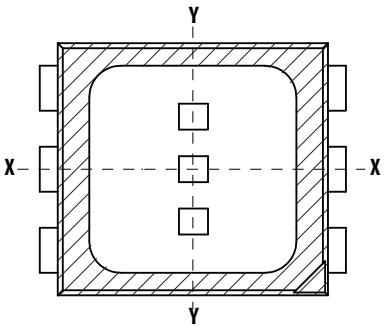

Figure 5c. Component Axis for Radiation Patterns

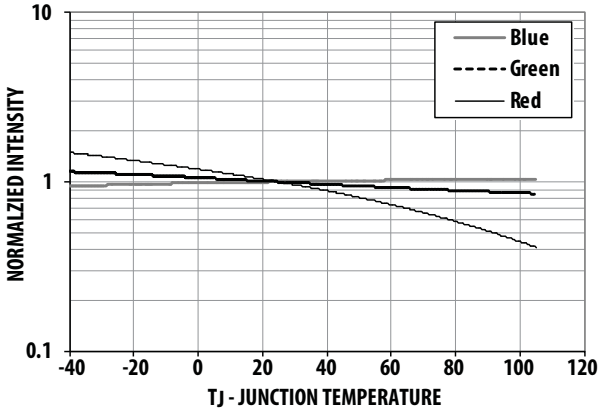

Figure 6. Relative Intensity vs Junction Temperature

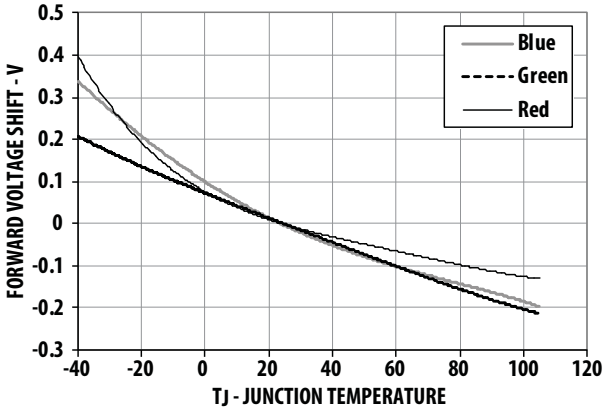

Figure 7. Forward Voltage vs Junction Temperature

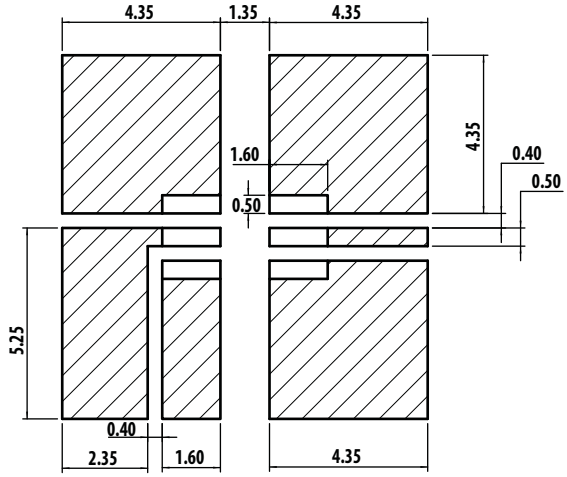

Figure 8a. Recommended soldering land pattern.

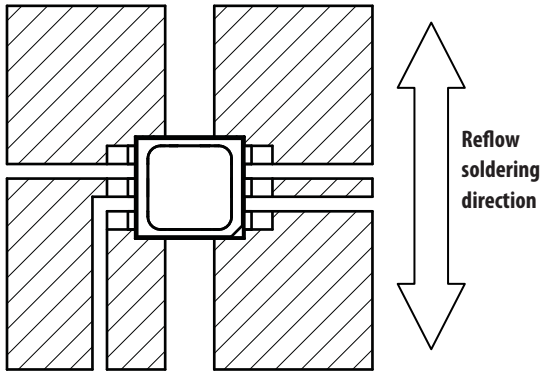

Figure 8b. LED Configuration on land pattern

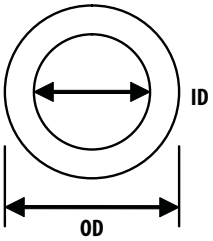

ID = 1.7mm
OD = 3.5mm

Figure 9. Recommended Pick and Place Nozzle Tip

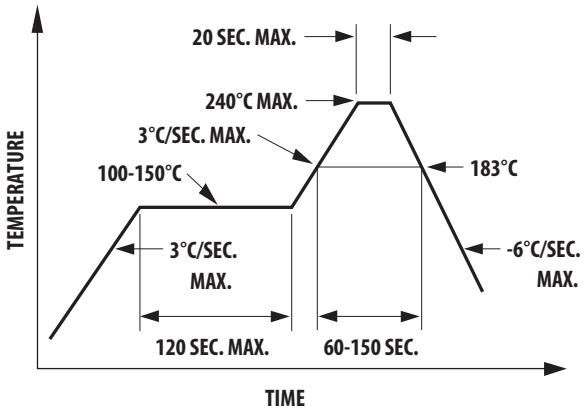

Figure 10. Recommended leaded reflow soldering profile.

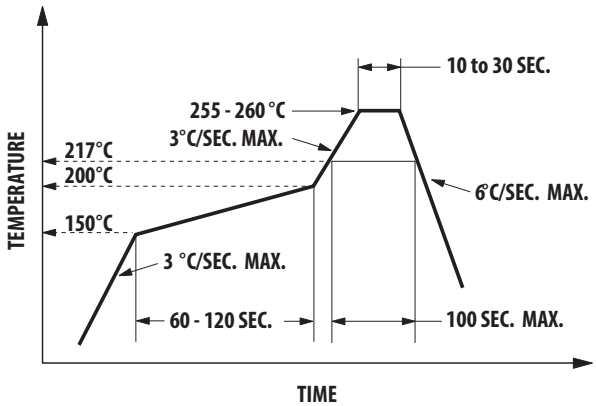

Figure 11. Recommended Pb-free reflow soldering profile.

Note: For detail information on reflow soldering of Avago surface mount LEDs, do refer to Avago Application Note AN 1060 Surface Mounting SMT LED Indicator Components

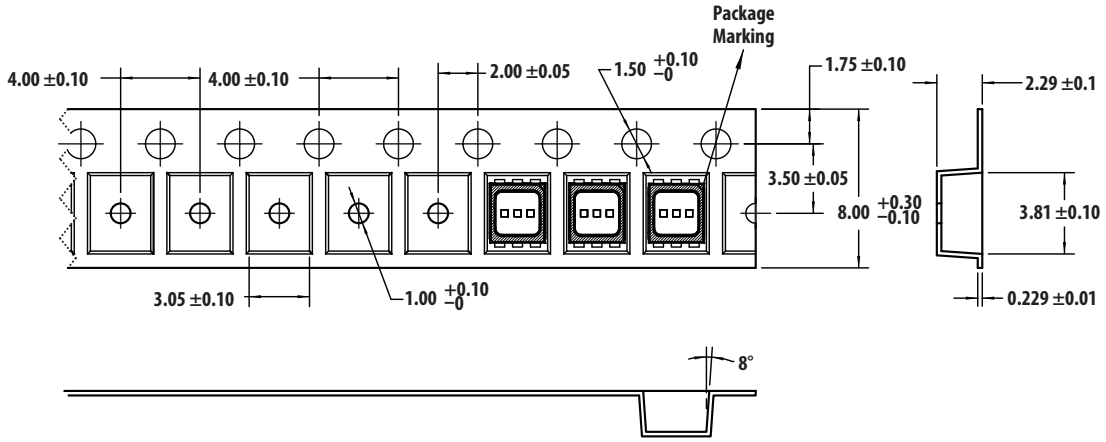

Figure 12. Carrier tape Dimension

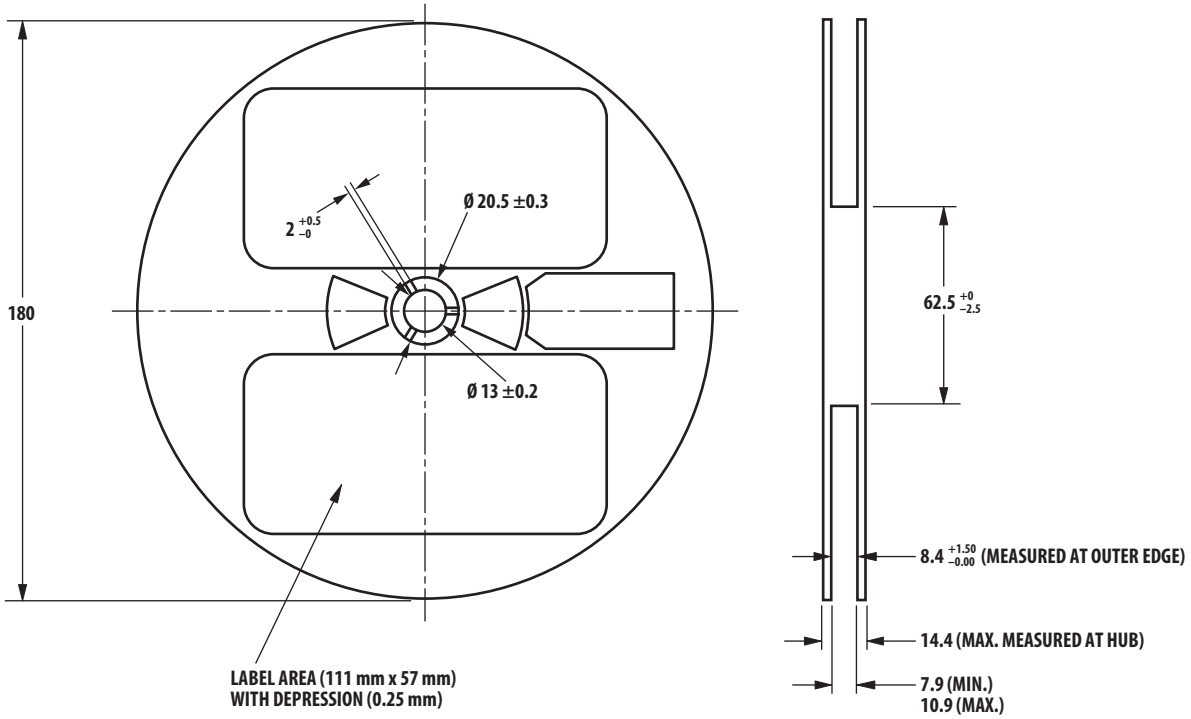

Figure 13. Reel Dimension

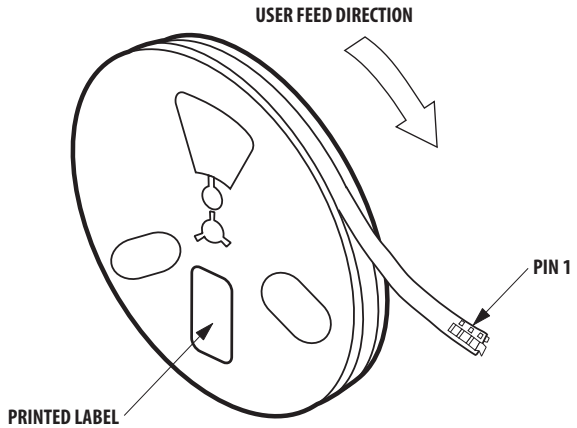

Figure 14. Reeling Orientation

Packaging Label:

(i) Avago Mother Label (Available on MBB bags)



(ii) Avago Baby Label (Available on reel)

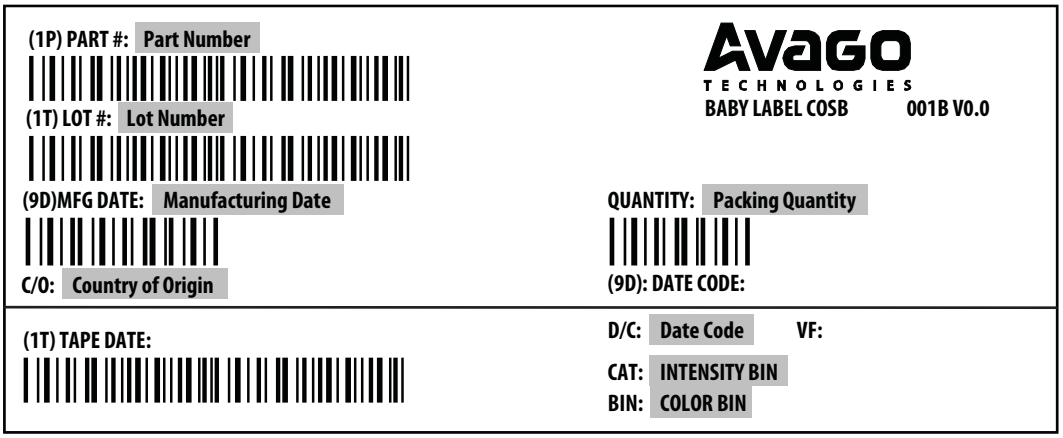

Example indicates luminous Intensity information for Red, Green and Blue respectively from label:

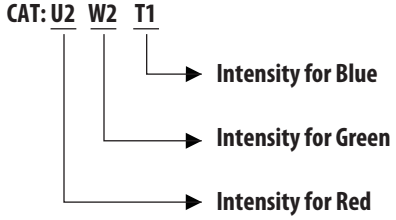

Example indicates color bin information for Green and Blue from label:

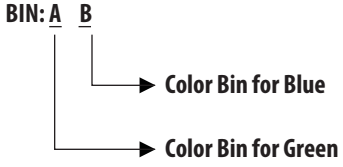

Intensity Bin Select (X_2, X_3)

Individual reel will contain parts from 1 half bin only

	Min Iv Bin (Minimum Intensity Bin)		
X_2	Red	Green	Blue
A	U2	W2	T1

	Number of Intensity bin from X2		
X_3	Red	Green	Blue
A	3	3	3

Color Bin Select (X4)

Individual Reel will contain part from 1 full bin only

	Color Bin Combinations		
X_4	Red	Green	Blue
0	Full distribution	A,B,C	A,B,C,D

Intensity Bin Limits

Bin ID	Min (mcd)	Max (mcd)
U2	560.0	715.0
V1	715.0	900.0
V2	900.0	1125.0
W1	1125.0	1400.0
W2	1400.0	1800.0
X1	1800.0	2240.0
X2	2240	2850

Tolerance of each bin limit ± 12%

Color Bin Limit

Red Color Bin Table

Bin ID	Dominant Wavelength		Chromaticity Coordinate				
	Min	Max					
Full range	617.0	627.0	x	0.6850	0.6815	0.7000	0.7037
			y	0.3149	0.3150	0.2966	0.2962

Tolerance of each bin limit is ± 1 nm

Green Color Bin Table

Bin ID	Min Dom	Max Dom	Chromaticity Coordinate				
A	525.0	531.0	x	0.1142	0.1624	0.2001	0.1625
			y	0.8262	0.7178	0.6983	0.8012
B	528.0	534.0	x	0.1387	0.1815	0.2179	0.1854
			y	0.8148	0.7089	0.6870	0.7867
C	531.0	537.0	x	0.1625	0.2001	0.2353	0.2077
			y	0.8012	0.6983	0.6747	0.7711

Tolerance of each bin limit is ± 1 nm

Blue Color Bin Table

Bin ID	Min Dom	Max Dom	Chromaticity Coordinate				
A	465.0	469.0	x	0.1355	0.1751	0.168	0.127
			y	0.0399	0.0986	0.1094	0.053
B	467.0	471.0	x	0.1314	0.1718	0.1638	0.122
			y	0.0459	0.1034	0.1167	0.063
C	469.0	473.0	x	0.1267	0.168	0.1593	0.116
			y	0.0534	0.1094	0.1255	0.074
D	471.0	475.0	x	0.1215	0.1638	0.1543	0.1096
			y	0.0626	0.1167	0.1361	0.0868

Tolerance f each bin limit is ± 1 nm

Handling Precaution

The encapsulation material of the LED is made of silicone for better product reliability. Since silicone is a soft material, avoid pressing on the silicon or poking the silicon with a sharp object as the product could be damaged and cause premature failure. During assembly handling, the unit should be held by the body only. Please refer to Avago Application Note AN 5288 for additional handling information and proper procedures.

Moisture Sensitivity

This product has a Moisture Sensitive Level 3 rating per JEDEC J-STD-020. Refer to Avago Application Note AN5305, Handling of Moisture Sensitive Surface Mount Devices, for additional details and a review of proper handling procedures.

A. Storage before use

- An Unopened moisture barrier bag (MBB) can be stored at <40°C/90%RH for 12 months. If the actual shelf life has exceeded 12 months and the humidity Indicator Card (HIC) indicates that baking is not required, then it is safe to reflow the LEDs per the original MSL rating.
- It is recommended that the MBB not be opened prior to assembly (e.g. for IQC).

B. Control after opening the MBB

- The humidity indicator card (HIC) shall be read immediately upon opening of MBB.
- The LEDs must be kept at <30°C / 60%RH at all times and all high temperature related processes including soldering, curing or rework need to be completed within 168 hours.

C. Control for unfinished reel

- Unused LEDs must be stored in a sealed MBB with desiccant or desiccator at <5%RH.

D. Control of assembled boards

- If the PCB soldered with the LEDs is to be subjected to other high temperature processes, the PCB need to be stored in sealed MBB with desiccant or desiccator at <5%RH to ensure that all LEDs have not exceeded their floor life of 168 hours.

E. Baking is required if:

- The HIC indicator is not BROWN at 10% and is AZURE at 5%.
- The LEDs are exposed to condition of >30°C / 60% RH at any time.
- The Led floor life exceeded 168hrs.

The recommended baking condition is: 60±5°C for 20hrs

DISCLAIMER: *Avago's products and software are not specifically designed, manufactured or authorized for sale as parts, components or assemblies for the planning, construction, maintenenace or direct operation of a nuclear facility or for use in medical devices or applications. Customer is solely responsible, and waives all rights to make claims against avago or its suppliers, for all loss, damage, expense or liability in connection with such use.*

For product information and a complete list of distributors, please go to our web site: **www.avagotech.com**

Avago, Avago Technologies, and the A logo are trademarks of Avago Technologies in the United States and other countries.
Data subject to change. Copyright © 2005-2012 Avago Technologies. All rights reserved.
AV02-3793EN - September 13, 2012