ASMT-FJ10-ADH00
Surface Mount AF Lamp

Data Sheet

Descriptions

Avago Technologies' ASMT-FJ10-ADH00 is a SMT (Surface Mount Technology) dome lamp uses an untinted, nondiffused lens to provide a high luminous intensity within a narrow radiation pattern. The device is made by encapsulating LED chip on axial lead frame to form molded epoxy lamp package with 6 bended leads for surfacing mounting.

This lamp type LED utilize Aluminum Indium Gallium Phosphide (AlInGaP) material technology. The AlInGaP material has a very high luminous efficiency, capable of producing high light output over a wide range of drive currents. The color available for this SMT Lamp package is 605nm Orange.

This narrow angle SMT lamp package is designed for applications that require long distance illumination and narrow beam pattern such as auxiliary flash for auto-focus function in digital still camera etc. In order to facilitate pick and place operation, this SMT Lamp is shipped in tape and reel, with 1000 units per reel. This package is compatible with Pb-free IR soldering process.

Eye Safety

These orange Surface Mount AF Lamp are use for camera application. The LEDs have lenses, which focus the beam at about 10mm from the front of the lens, from where the beam diverges relatively slowly. If the LEDs were placed in a product, they would create a Class 1 LED to IEC/EN 60825-1 (2001) under all conditions of operation & single fault failure. As long as no collimating optics are added to the optical path.

Features

- Smooth, Consistent Narrow Radiation Pattern
- 8° View Angle
- 4.8 L x 4.8 X 5.33H mm Package Dimension
- Good Intensity Output
- Compatible with IR Solder Reflow
- Available in 16mm tape on 15" (380mm) Diameter reels
- Clear, Non-diffused Epoxy
- IEC/EN 60825-1 Eye Safety Class 1
- RoHS Compliant

Applications

- Camera

CAUTION: *ASMT-FJ10 LEDs are Class 1 ESD sensitive. Please observe appropriate precautions during handling and processing. Refer to Avago Technologies Application Note AN-1142 for additional details.*

Package Dimensions

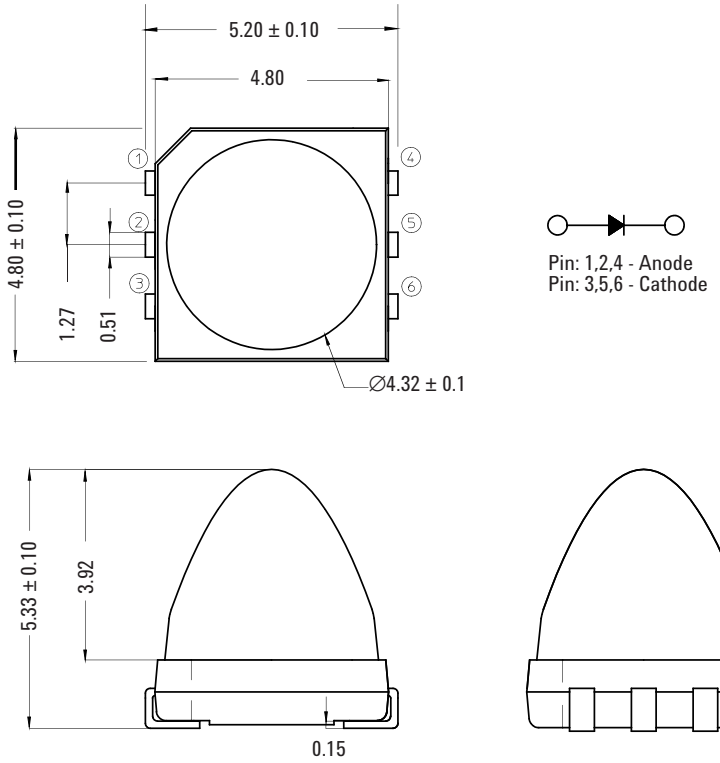

Notes:
1. All Dimensions in millimeters.
2. Tolerance is ±0.1mm unless otherwise specified.

Device Selection Guide

Color	Part Number	min. Iv (cd)	Typ. Iv (cd)	Test Current (mA)	Dice Technology
Orange	ASMT-FJ10-ADH00	9	22	20	AlInGaP

Notes:
1. The luminous intensity I_V, is measured at the mechanical axis of the lamp package. The actual peak of the spatial radiation pattern may not be aligned with this axis.
2. Iv Tolerance = ±15%

Absolute Maximum Ratings at $T_A = 25°C$

Parameter	ASMT-FJ10-ADH00	Units
DC Forward Current	50	mA
Power Dissipation	130	mW
LED Junction Temperature	110	°C
Operating Temperature Range	-40 to +85	°C
Storage Temperature Range	-40 to +100	°C
Soldering Temperature	Figure 6	

Optical Characteristics (T_A = 25 °C)

Part Number	Color	Peak Wavelength λ_{PEAK} (nm) Typ.	Dominant Wavelength λ_D [1] (nm) Typ.	Viewing Angle $2\theta_{1/2}$ [2] (Degrees) Typ.	Luminous Efficacy, η_v [3] (lm/W) Typ.	Luminous Efficiency (lm/W) Typ.
ASMT-FJ10-ADH00	Orange	612	605	8	355	27

Notes:
1. The dominant wavelength, λ_D, is derived from the CIE Chromaticity Diagram and represents the color of the device.
2. $\theta 1/2$ is the off-axis angle where the luminous intensity is ½ the peak intensity.
3. Radiant intensity, I_e in watts/steradian, may be calculated from the equation $I_e = I_v/\eta_v$, where I_v is the luminous intensity in candelas and η_v is the luminous efficacy in lumens/watt.

Electrical Characteristic (T_A = 25°C)

Part Number	Forward Voltage V_F (Volts) @ I_F = 20mA Min.	Typ.	Max.	Reverse Voltage VR @ 10μA Min.	Capacitance C (pF), VF= 0 f = 1MHz Typ.
ASMT-FJ10-ADH00	1.8	2.0	2.4	5	22

Notes:
Vf tolerance is ±0.1V.

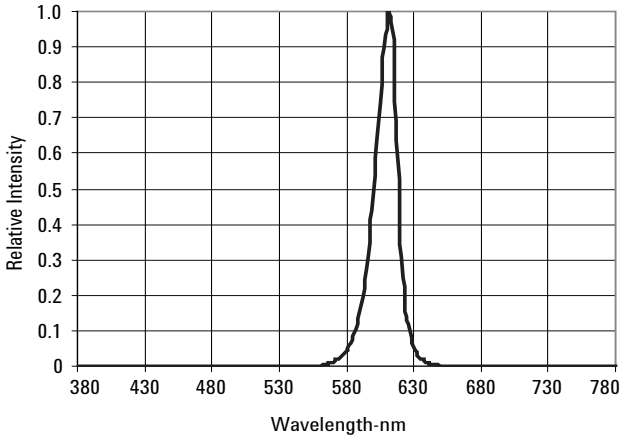

Figure 1. Relative Intensity vs. Wavelength

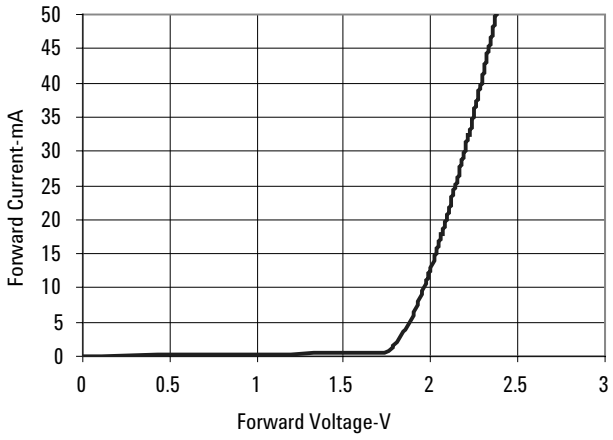

Figure 2. Forward Current vs Forward Voltage

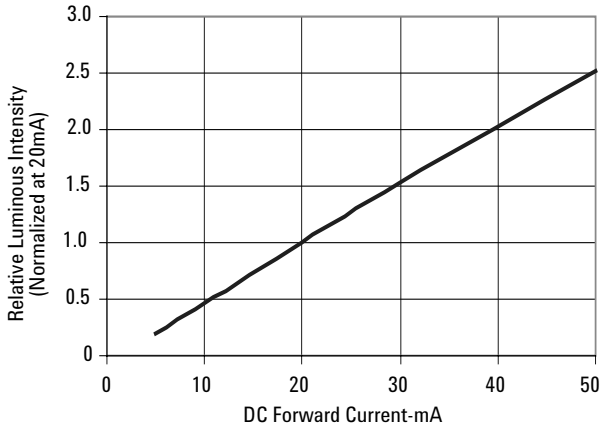

Figure 3. Relative Intensity vs. Forward Current

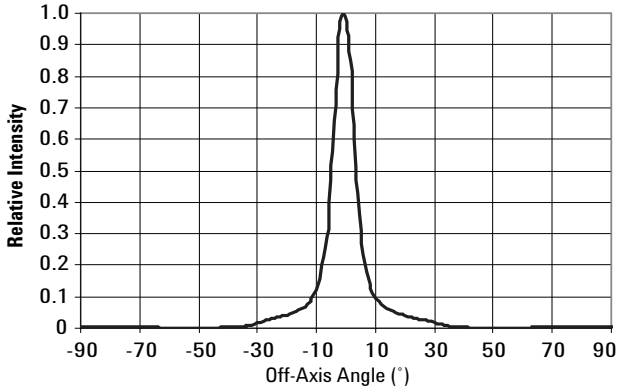

Figure 4. Radiation Pattern

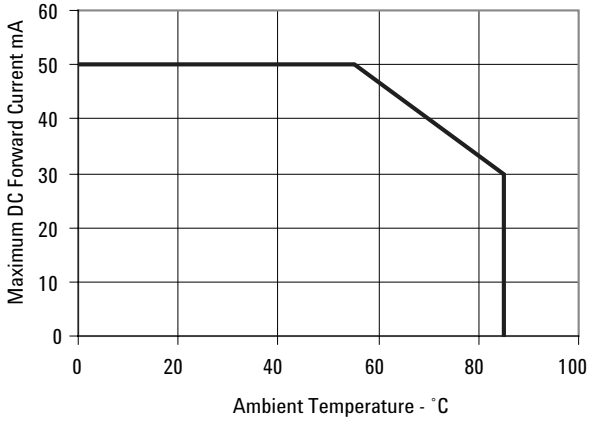

Figure 5. Maximum forward current vs ambient temperature.

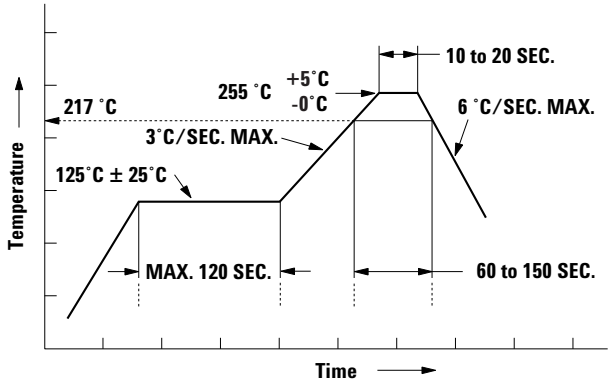

Figure 6. Recommended reflow soldering

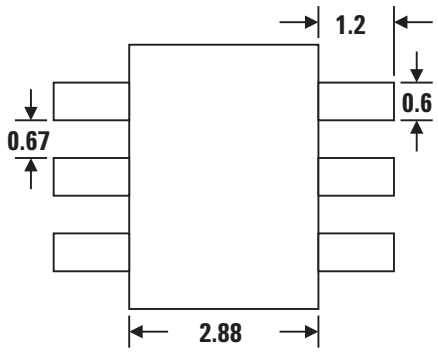

Figure 7. Recommended soldering land pattern

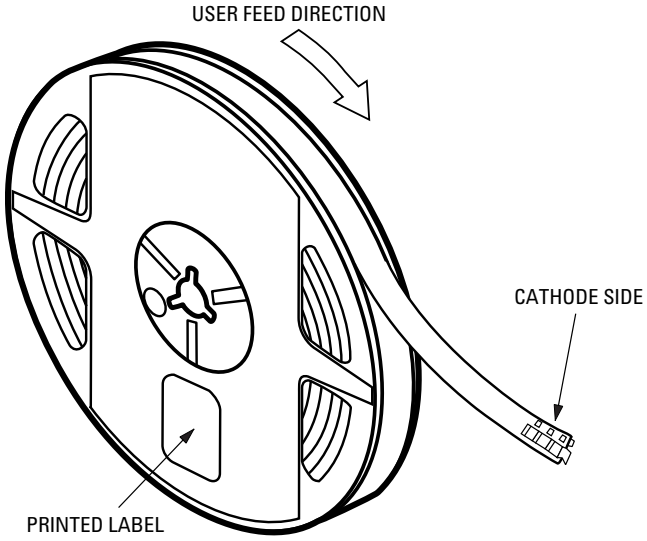

Figure 8. Reeling Orientations

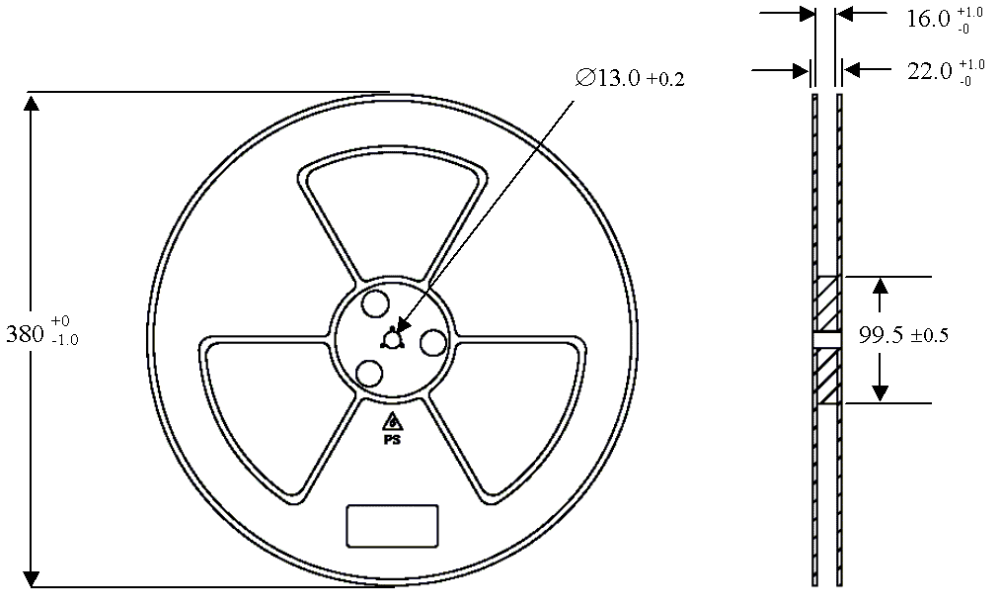

Figure 9. Reel Dimensions

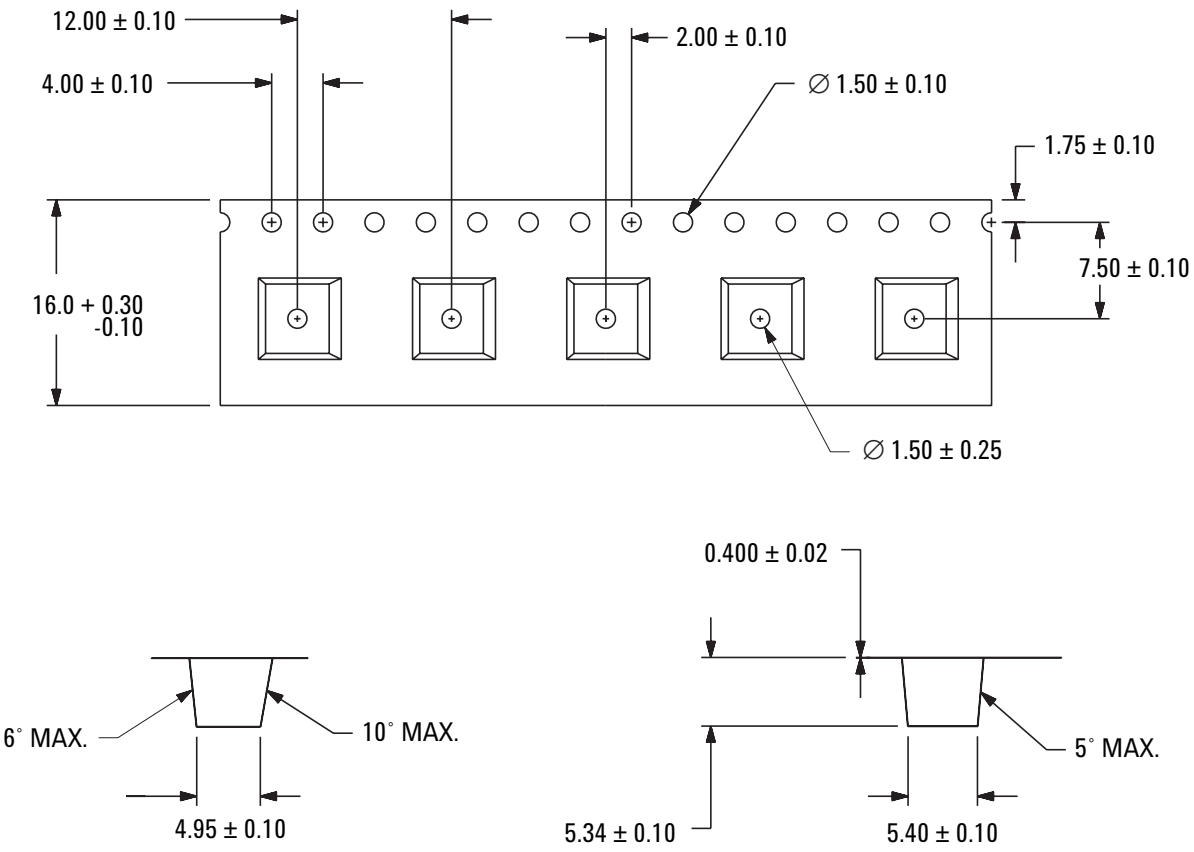

Figure 10. Tape Dimensions

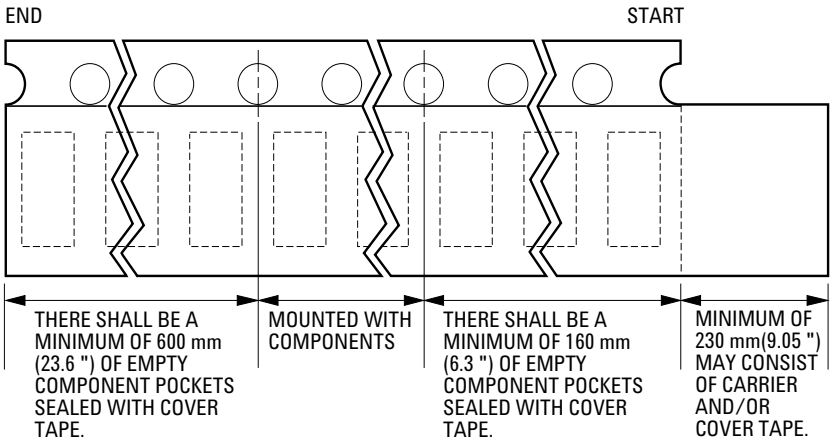

Figure 11. Tape Leader and Trailer Dimensions

There shall be a minimum of 600mm (23.6") of empty component pockets sealed with cover tape

Notes:
1. All dimensions in millimeters.
2. Tolerance is ± 0.1 mm unless otherwise specified.

Iv Bin Category (cd)

Bin ID	Min	Max
D	9.0	11.5
E	11.5	15.0
F	15.0	19.5
G	19.5	25.5
H	25.5	33.0

Iv Tolerance = ±15%

Color Bin Category

Orange	Min (nm)	Max (nm)
A	600	604
B	604	608
C	608	612

Tolerance = ±1nm

For product information and a complete list of distributors, please go to our web site: **www.avagotech.com**

Avago, Avago Technologies, and the A logo are trademarks of Avago Technologies, Limited in the United States and other countries.
Data subject to change. Copyright © 2007 Avago Technologies Limited. All rights reserved. Obsoletes AV01-0482EN
AV02-0133EN -February 8, 2007