Zero Cycle Slip Peak EMI reduction IC

General Features

- Input frequency range: 20MHz - 50MHz.
- Zero input - output propagation delay.
- Low-skew outputs.
  - Output-output skew less than 250pS.
  - Device-device skew less than 700pS.
- Less than 200pS cycle-to-cycle jitter is compatible with Pentium® based systems.
- Available in 16pin, 150mil SOIC, 4.4mm TSSOP (ASM3P623S00D/E/F), and in 8pin, 150 mil SOIC, 4.4mm TSSOP Packages (ASM3P623S00A/B/C).
- 3.3V operation
- Advanced 0.35µ CMOS technology.
- The First True Drop-in Solution.

Functional Description

ASM3P623S00D/E/F is a versatile, 3.3V zero-delay buffer designed to distribute high-speed clocks. It accepts one reference input and drives out eight low-skew clocks. It is available in a 16pin package. The ASM3P623S00A/B/C is the eight-pin version of the ASM3P623S00. It accepts one reference input and drives out one low-skew clock.

All parts have on-chip PLLs that lock to an input clock on the CLKIN pin. The PLL feedback is on-chip and is obtained from the CLKOUT pad, internal to the device.

Multiple ASM3P623S00D/E/F devices can accept the same input clock and distribute it. In this case, the skew between the outputs of the two devices is guaranteed to be less than 700pS.

All outputs have less than 200pS of cycle-to-cycle jitter. The input and output propagation delay is guaranteed to be less than 250pS, and the output-to-output skew is guaranteed to be less than 250pS.

Please refer "Differential Cycle Slips and Spread Spectrum Control Table" for deviations and differential Cycle Slips for ASM3P623S00A/B/C and the ASM3P623S00D/E/F devices

The ASM3P623S00A/B/C and the ASM3P623S00D/E/F are available in two different configurations, as shown in the ordering information table.

Block Diagram

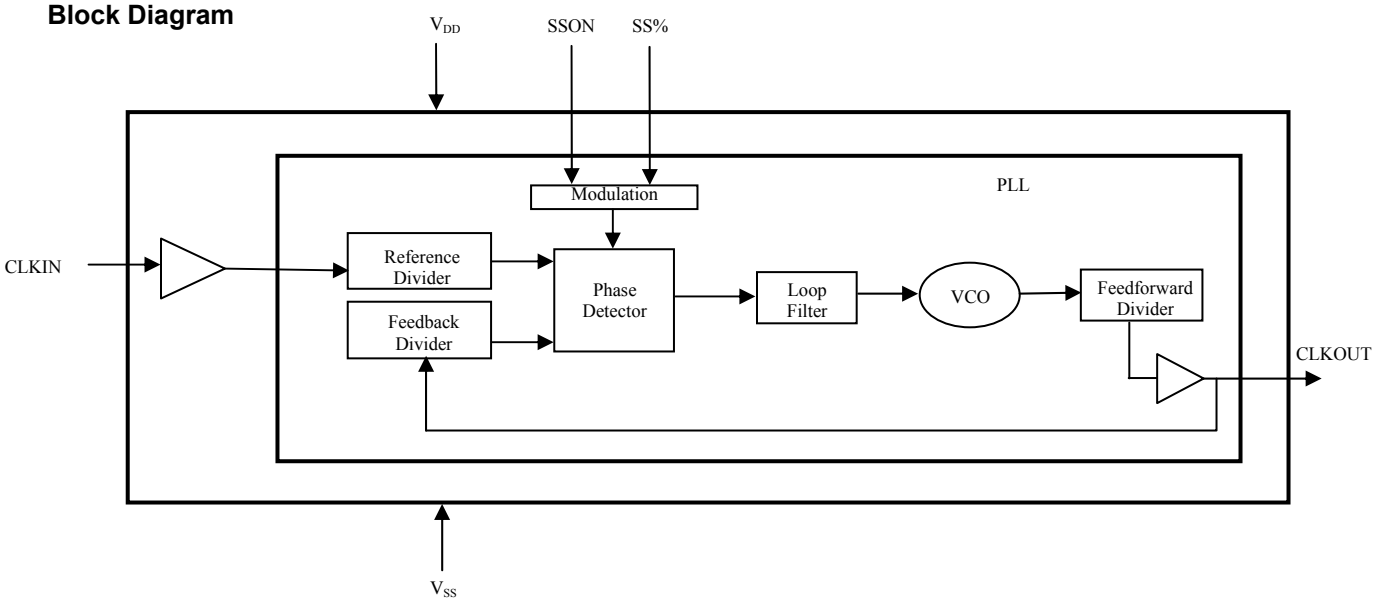

Notice: The information in this document is subject to change without notice.

Spread Spectrum Frequency Generation

The clocks in digital systems are typically square waves with a 50% duty cycle and as frequencies increase the edge rates also get faster. Analysis shows that a square wave is composed of fundamental frequency and harmonics. The fundamental frequency and harmonics generate the energy peaks that become the source of EMI. Regulatory agencies test electronic equipment by measuring the amount of peak energy radiated from the equipment. In fact, the peak level allowed decreases as the frequency increases. The standard methods of reducing EMI are to use shielding, filtering, multi-layer PCBs etc. These methods are expensive. Spread spectrum clocking reduces the peak energy by reducing the Q factor of the clock. This is done by slowly modulating the clock frequency. The ASM3P623S00X uses the center modulation spread spectrum technique in which the modulated output frequency varies above and below the reference frequency with a specified modulation rate. With center modulation, the average frequency is the same as the unmodulated frequency and there is no performance degradation

Cycle Slip

Cycle slip occurs when the output clock edge 'wanders' away from the corresponding input clock edge. There are two types of cycle slips – a Differential cycle slip and an Integral cycle slip. The differential cycle slip is caused due the clock edge variation over one modulation cycle. It is defined by the maximum amount of 'wander' the clock edge will have within one modulation cycle. Integral cycle slip occurs due to the accumulation of the cycle slip over successive modulation cycles. In ASM3P623S00A/B/C/D/E/F the differential cycle slip is within the value mentioned in the **"**Differential Cycle Slip and Spread Spectrum Control Table" and the Integral Cycle Slip is 'Zero'.

Pin Configuration

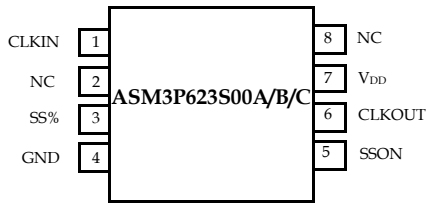

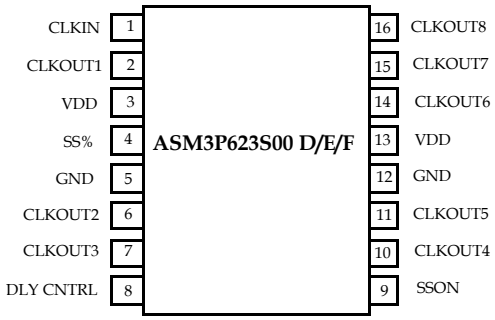

Notice: The information in this document is subject to change without notice.

Pin Description for ASM3P623S00A/B/C

Pin #	Pin Name	Description
1	CLKIN[2]	Input reference frequency, 5V-tolerant input
2	NC	No Connect
3	SS%[4]	Spread Spectrum Selection
4	GND	Ground
5	SSON[4]	Spread Spectrum enable and disable option When SSON is HIGH, the spread spectrum is enabled and when LOW, it turns off the spread spectrum.
6	CLKOUT[1,3]	Buffered clock output
7	VDD	3.3V supply
8	NC	No Connect

Pin Description for ASM3P623S00D/E/F

Pin #	Pin Name	Description
1	CLKIN[2]	Input reference frequency, 5V tolerant input
2	CLKOUT1[3]	Buffered clock output
3	VDD	3.3V supply
4	SS%[4]	Spread Spectrum Selection
5	GND	Ground
6	CLKOUT2[3]	Buffered clock output
7	CLKOUT3[3]	Buffered clock output
8	DLY CNTRL	The pin is used to skew the outputs such that they align with the input. The skew can is in the range of 100-200pS
9	SSON[4]	Spread Spectrum enable and disable option. When SSON is HIGH, the spread spectrum is enabled and when LOW, it turns off the spread spectrum.
10	CLKOUT4[3]	Buffered clock output
11	CLKOUT5[3]	Buffered clock output
12	GND	Ground
13	VDD	3.3V supply
14	CLKOUT6[3]	Buffered clock output
15	CLKOUT7[3]	Buffered clock output
16	CLKOUT8[3]	Buffered clock output

Notes:
1. This output is driven and has an internal feedback for the PLL.
2. Weak pull-down. 3. Weak pull-down on all outputs. 4. Weak pull-up on these inputs.

Notice: The information in this document is subject to change without notice.

Differential Cycle Slips and Spread Spectrum Control Table

(Note: The values given in the table are for an input frequency of 32 MHz)

Device	SS%	Deviation	Differential Cycle Slips (Nd)
ASM3P623S00A	0	±0.5 %	0.125
	1	±1 %	0.25
ASM3P623S00B	0	±0.25 %	0.125
	1	±0.5 %	0.25
ASM3P623S00C	0	±0.125 %	0.125
	1	±0.25 %	0.25
ASM3P623S00D	0	±0.5 %	0.125
	1	±1 %	0.25
ASM3P623S00E	0	±0.25 %	0.125
	1	±0.5 %	0.25
ASM3P623S00F	0	±0.125 %	0.125
	1	±0.25 %	0.25

Absolute Maximum Ratings

Parameter	Min	Max	Unit
Supply Voltage to Ground Potential	-0.5	+7.0	V
DC Input Voltage (Except CLKIN)	-0.5	VDD + 0.5	V
DC Input Voltage (CLKIN)	-0.5	7	V
Storage Temperature	-65	+150	°C
Max. Soldering Temperature (10 sec)		260	°C
Junction Temperature		150	°C
Static Discharge Voltage (As per JEDEC STD22- A114-B)		2000	V

Note: These are stress ratings only and functional usage is not implied. Exposure to absolute maximum ratings for prolonged periods can affect device reliability.

Notice: The information in this document is subject to change without notice.

Operating Conditions for ASM3P623S00A/B/C and ASM3P623S00D/E/F Devices

Parameter	Description	Min	Max	Unit
VDD	Supply Voltage	3.0	3.6	V
T_A	Operating Temperature (Ambient Temperature)	0	70	°C
C_L	Load Capacitance		30	pF
C_{IN}	Input Capacitance		7	pF

Electrical Characteristics for ASM3P623S00A/B/C and ASM3P623S00D/E/F

Parameter	Description	Test Conditions	Min	Typ	Max	Unit
V_{IL}	Input LOW Voltage[5]				0.8	V
V_{IH}	Input HIGH Voltage[5]		2.0			V
I_{IL}	Input LOW Current	V_{IN} = 0V			50	µA
I_{IH}	Input HIGH Current	V_{IN} = VDD			100	µA
V_{OL}	Output LOW Voltage[6]	I_{OL} = 8mA			0.4	V
V_{OH}	Output HIGH Voltage[6]	I_{OH} = -8mA	2.4			V
I_{DD}	Supply Current	Unloaded outputs		15		mA
Z_o	Output Impedance			23		Ω

Switching Characteristics for ASM3P623S00A/B/C and ASM3P623S00D/E/F[7]

Parameter	Description	Test Conditions	Min	Typ	Max	Unit
$1/t_1$	Output Frequency	30pF load	20		50	MHz
	Duty Cycle [6] = (t_2 / t_1) * 100	Measured at VDD/2	40	50	60	%
t_3	Output Rise Time [6]	Measured between 0.8V and 2.0V			2.5	nS
t_4	Output Fall Time [6]	Measured between 2.0V and 0.8V			2.5	nS
t_5	Output-to-output skew [6]	All outputs equally loaded			250	pS
t_6	Delay, CLKIN Rising Edge to CLKOUT Rising Edge [6]	Measured at VDD /2			±350	pS
t_7	Device-to-Device Skew [6]	Measured at VDD/2 on the CLKOUT pins of the device			700	pS
t_J	Cycle-to-cycle jitter [6]	Loaded outputs			200	pS
t_{LOCK}	PLL Lock Time [6]	Stable power supply, valid clock presented on CLKIN pin			1.0	mS

Notes:

5. CLKIN input has a threshold voltage of VDD/2

6. Parameter is guaranteed by design and characterization. Not 100% tested in production

7. All parameters specified with loaded outputs.

Notice: The information in this document is subject to change without notice.

Switching Waveforms

Duty Cycle Timing

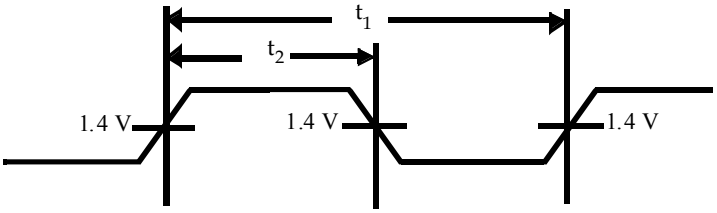

All Outputs Rise/Fall Time

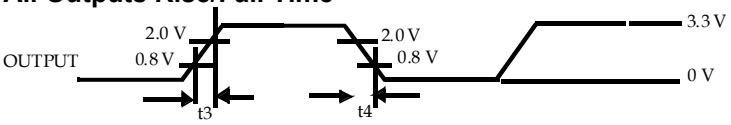

Output - Output Skew

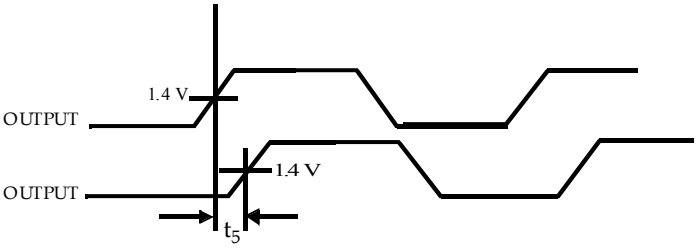

Input - Output Propagation Delay

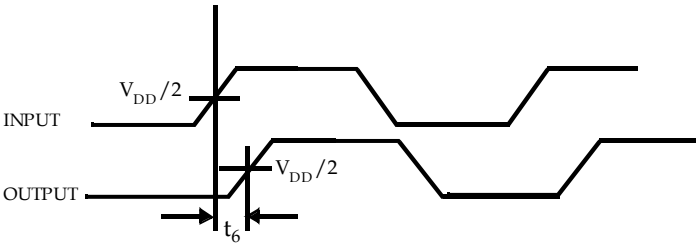

Device - Device Skew

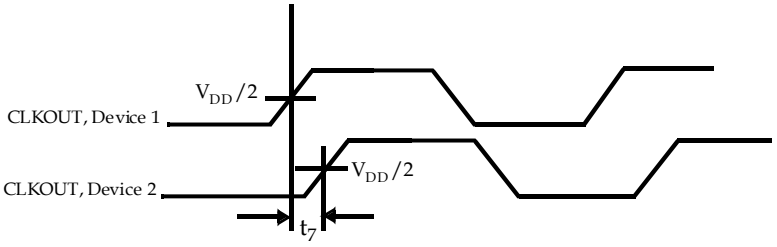

Notice: The information in this document is subject to change without notice.

Differential cycle slip

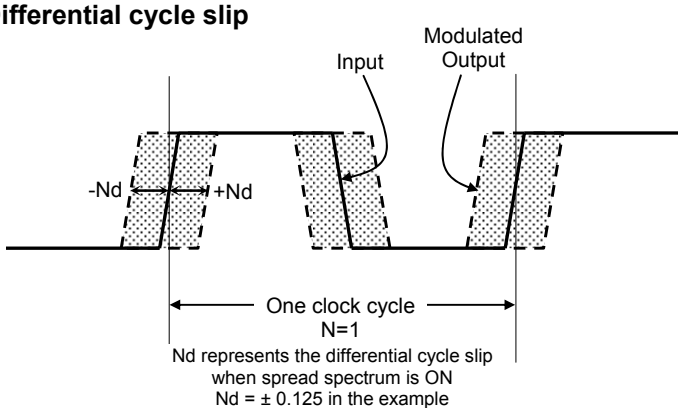

Test Circuits

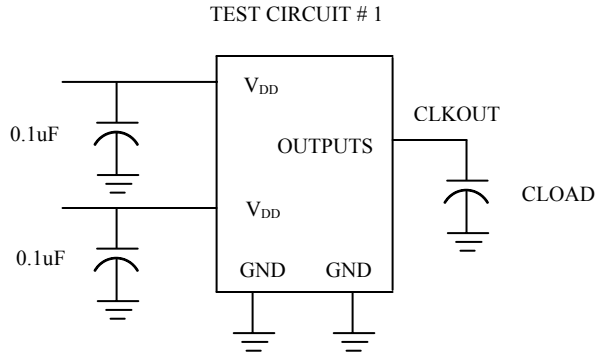

Notice: The information in this document is subject to change without notice.

Package Information

8-lead (150-mil) SOIC Package

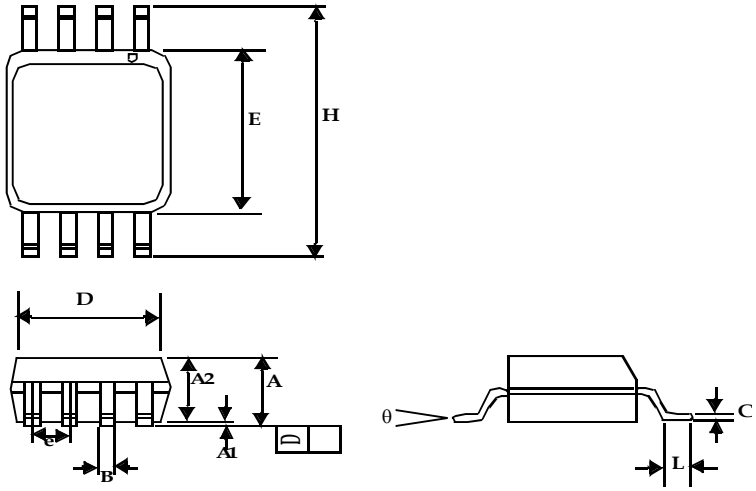

Symbol	Dimensions			
	Inches		Millimeters	
	Min	Max	Min	Max
A1	0.004	0.010	0.10	0.25
A	0.053	0.069	1.35	1.75
A2	0.049	0.059	1.25	1.50
B	0.012	0.020	0.31	0.51
C	0.007	0.010	0.18	0.25
D	0.193 BSC		4.90 BSC	
E	0.154 BSC		3.91 BSC	
e	0.050 BSC		1.27 BSC	
H	0.236 BSC		6.00 BSC	
L	0.016	0.050	0.41	1.27
θ	0°	8°	0°	8°

Notice: The information in this document is subject to change without notice.

8-lead Thin Shrunk Small Outline Package (4.40-MM Body)

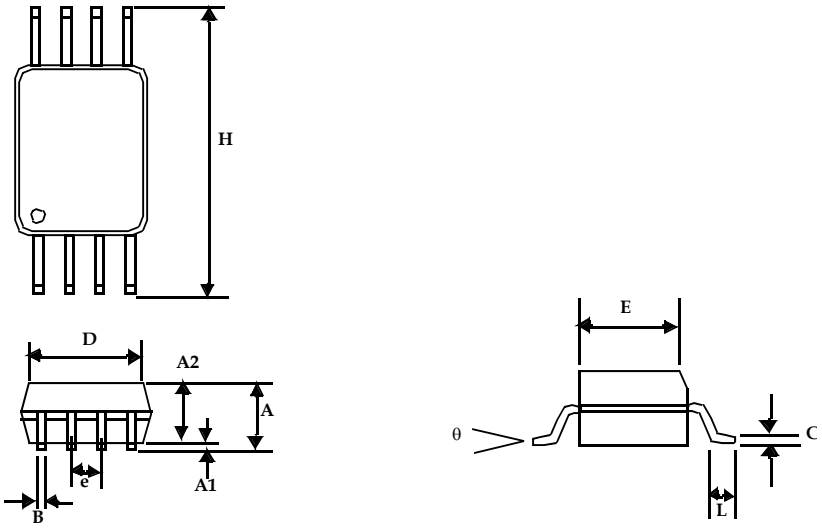

Symbol	Dimensions			
	Inches		Millimeters	
	Min	Max	Min	Max
A		0.043		1.10
A1	0.002	0.006	0.05	0.15
A2	0.033	0.037	0.85	0.95
B	0.008	0.012	0.19	0.30
c	0.004	0.008	0.09	0.20
D	0.114	0.122	2.90	3.10
E	0.169	0.177	4.30	4.50
e	0.026 BSC		0.65 BSC	
H	0.252 BSC		6.40 BSC	
L	0.020	0.028	0.50	0.70
θ	0°	8°	0°	8°

Notice: The information in this document is subject to change without notice.

16-lead (150 Mil) Molded SOIC Package

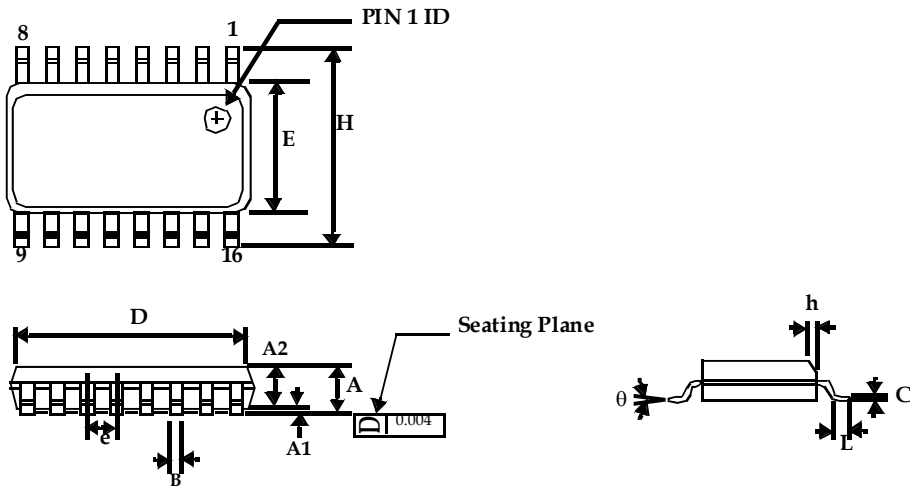

Symbol	Dimensions			
	Inches		Millimeters	
	Min	Max	Min	Max
A	0.053	0.069	1.35	1.75
A1	0.004	0.010	0.10	0.25
A2	0.049	0.059	1.25	1.50
B	0.013	0.022	0.33	0.53
C	0.008	0.012	0.19	0.27
D	0.386	0.394	9.80	10.01
E	0.150	0.157	3.80	4.00
e	0.050 BSC		1.27 BSC	
H	0.228	0.244	5.80	6.20
h	0.010	0.016	0.25	0.41
L	0.016	0.035	0.40	0.89
θ	0°	8°	0°	8°

Notice: The information in this document is subject to change without notice.

16-lead Thin Shrunk Small Outline Package (4.40-MM Body)

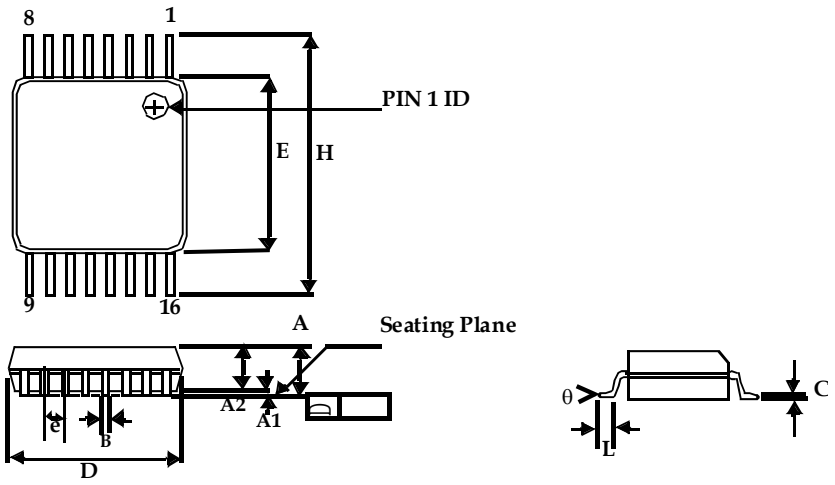

Symbol	Dimensions			
	Inches		Millimeters	
	Min	Max	Min	Max
A		0.043		1.20
A1	0.002	0.006	0.05	0.15
A2	0.031	0.041	0.80	1.05
B	0.007	0.012	0.19	0.30
C	0.004	0.008	0.09	0.20
D	0.193	0.201	4.90	5.10
E	0.169	0.177	4.30	4.50
e	0.026 BSC		0.65 BSC	
H	0.252 BSC		6.40 BSC	
L	0.020	0.030	0.50	0.75
θ	0°	8°	0°	8°

Notice: The information in this document is subject to change without notice.

Ordering Codes

Ordering Code	Marking	Package Type	Operating Range
ASM3P623S00DF-16-ST	3P623S00DF	16-pin 150-mil SOIC-TUBE, Pb Free	Commercial
ASM3P623S00EF-16-ST	3P623S00EF	16-pin 150-mil SOIC- TUBE, Pb Free	Commercial
ASM3P623S00FF-16-ST	3P623S00FF	16-pin 150-mil SOIC- TUBE, Pb Free	Commercial
ASM3I623S00DF-16-ST	3I623S00DF	16-pin 150-mil SOIC-TUBE, Pb Free	Industrial
ASM3I623S00EF-16-ST	3I623S00EF	16-pin 150-mil SOIC- TUBE, Pb Free	Industrial
ASM3I623S00FF-16-ST	3I623S00FF	16-pin 150-mil SOIC- TUBE, Pb Free	Industrial
ASM3P623S00DF-16-SR	3P623S00DF	16-pin 150-mil SOIC-TAPE & REEL, Pb Free	Commercial
ASM3P623S00EF-16-SR	3P623S00EF	16-pin 150-mil SOIC-TAPE & REEL, Pb Free	Commercial
ASM3P623S00FF-16-SR	3P623S00FF	16-pin 150-mil SOIC-TAPE & REEL, Pb Free	Commercial
ASM3I623S00DF-16-SR	3I623S00DF	16-pin 150-mil SOIC-TAPE & REEL, Pb Free	Industrial
ASM3I623S00EF-16-SR	3I623S00EF	16-pin 150-mil SOIC-TAPE & REEL, Pb Free	Industrial
ASM3I623S00FF-16-SR	3I623S00FF	16-pin 150-mil SOIC-TAPE & REEL, Pb Free	Industrial
ASM3P623S00DF-16-TT	3P623S00DF	16-pin 4.4-mm TSSOP - TUBE, Pb Free	Commercial
ASM3P623S00EF-16-TT	3P623S00EF	16-pin 4.4-mm TSSOP - TUBE, Pb Free	Commercial
ASM3P623S00FF-16-TT	3P623S00FF	16-pin 4.4-mm TSSOP - TUBE, Pb Free	Commercial
ASM3I623S00DF-16-TT	3I623S00DF	16-pin 4.4-mm TSSOP - TUBE, Pb Free	Industrial
ASM3I623S00EF-16-TT	3I623S00EF	16-pin 4.4-mm TSSOP - TUBE, Pb Free	Industrial
ASM3I623S00FF-16-TT	3I623S00FF	16-pin 4.4-mm TSSOP - TUBE, Pb Free	Industrial
ASM3P623S00DF-16-TR	3P623S00DF	16-pin 4.4-mm TSSOP - TAPE & REEL, Pb Free	Commercial
ASM3P623S00EF-16-TR	3P623S00EF	16- pin 4.4-mm TSSOP - TAPE & REEL, Pb Free	Commercial
ASM3P623S00FF-16-TR	3P623S00FF	16- pin 4.4-mm TSSOP - TAPE & REEL, Pb Free	Commercial
ASM3I623S00DF-16-TR	3I623S00DF	16-pin 4.4-mm TSSOP - TAPE & REEL, Pb Free	Industrial
ASM3I623S00EF-16-TR	3I623S00EF	16- pin 4.4-mm TSSOP - TAPE & REEL, Pb Free	Industrial
ASM3I623S00FF-16-TR	3I623S00FF	16- pin 4.4-mm TSSOP - TAPE & REEL, Pb Free	Industrial
ASM3P623S00AF-08-ST	3P623S00AF	8-pin 150-mil SOIC-TUBE, Pb Free	Commercial
ASM3P623S00BF-08-ST	3P623S00BF	8-pin 150-mil SOIC- TUBE, Pb Free	Commercial
ASM3P623S00CF-08-ST	3P623S00CF	8-pin 150-mil SOIC- TUBE, Pb Free	Commercial
ASM3I623S00AF-08-ST	3I623S00AF	8-pin 150-mil SOIC-TUBE, Pb Free	Industrial
ASM3I623S00BF-08-ST	3I623S00BF	8-pin 150-mil SOIC- TUBE, Pb Free	Industrial
ASM3I623S00CF-08-ST	3I623S00CF	8-pin 150-mil SOIC- TUBE, Pb Free	Industrial
ASM3P623S00AF-08-SR	3P623S00AF	8-pin 150-mil SOIC-TAPE & REEL, Pb Free	Commercial
ASM3P623S00BF-08-SR	3P623S00BF	8-pin 150-mil SOIC-TAPE & REEL, Pb Free	Commercial

Notice: The information in this document is subject to change without notice.

Ordering Codes (cont'd)

Ordering Code	Marking	Package Type	Operating Range
ASM3P623S00CF-08-SR	3P623S00CF	8-pin 150-mil SOIC-TAPE & REEL, Pb Free	Commercial
ASM3I623S00AF-08-SR	3I623S00AF	8-pin 150-mil SOIC-TAPE & REEL, Pb Free	Industrial
ASM3I623S00BF-08-SR	3I623S00BF	8-pin 150-mil SOIC-TAPE & REEL, Pb Free	Industrial
ASM3I623S00CF-08-SR	3I623S00CF	8-pin 150-mil SOIC-TAPE & REEL, Pb Free	Industrial
ASM3P623S00AF-08-TT	3P623S00AF	8-pin 4.4-mm TSSOP - TUBE, Pb Free	Commercial
ASM3P623S00BF-08-TT	3P623S00BF	8-pin 4.4-mm TSSOP - TUBE, Pb Free	Commercial
ASM3P623S00CF-08-TT	3P623S00CF	8-pin 4.4-mm TSSOP - TUBE, Pb Free	Commercial
ASM3I623S00AF-08-TT	3I623S00AF	8-pin 4.4-mm TSSOP - TUBE, Pb Free	Industrial
ASM3I623S00BF-08-TT	3I623S00BF	8-pin 4.4-mm TSSOP - TUBE, Pb Free	Industrial
ASM3I623S00CF-08-TT	3I623S00BF	8-pin 4.4-mm TSSOP - TUBE, Pb Free	Industrial
ASM3P623S00AF-08-TR	3P623S00AF	8-pin 4.4-mm TSSOP - TAPE & REEL, Pb Free	Commercial
ASM3P623S00BF-08-TR	3P623S00BF	8- pin 4.4-mm TSSOP - TAPE & REEL, Pb Free	Commercial
ASM3P623S00CF-08-TR	3P623S00CF	8-pin 4.4-mm TSSOP - TAPE & REEL, Pb Free	Commercial
ASM3I623S00AF-08-TR	3I623S00AF	8-pin 4.4-mm TSSOP - TAPE & REEL, Pb Free	Industrial
ASM3I623S00BF-08-TR	3I623S00BF	8-pin 4.4-mm TSSOP - TAPE & REEL, Pb Free	Industrial
ASM3I623S00CF-08-TR	3I623S00CF	8-pin 4.4-mm TSSOP - TAPE & REEL, Pb Free	Industrial

Notice: The information in this document is subject to change without notice.

Ordering Codes (cont'd)

Ordering Code	Marking	Package Type	Operating Range
ASM3P623S00DG-16-ST	3P623S00DG	16-pin 150-mil SOIC-TUBE, Green	Commercial
ASM3P623S00EG-16-ST	3P623S00EG	16-pin 150-mil SOIC- TUBE, Green	Commercial
ASM3P623S00FG-16-ST	3P623S00FG	16-pin 150-mil SOIC- TUBE, Green	Commercial
ASM3I623S00DG-16-ST	3I623S00DG	16-pin 150-mil SOIC-TUBE, Green	Industrial
ASM3I623S00EG-16-ST	3I623S00EG	16-pin 150-mil SOIC- TUBE, Green	Industrial
ASM3I623S00FG-16-ST	3I623S00FG	16-pin 150-mil SOIC- TUBE, Green	Industrial
ASM3P623S00DG-16-SR	3P623S00DG	16-pin 150-mil SOIC-TAPE & REEL, Green	Commercial
ASM3P623S00EG-16-SR	3P623S00EG	16-pin 150-mil SOIC-TAPE & REEL, Green	Commercial
ASM3P623S00FG-16-SR	3P623S00FG	16-pin 150-mil SOIC-TAPE & REEL, Green	Commercial
ASM3I623S00DG-16-SR	3I623S00DG	16-pin 150-mil SOIC-TAPE & REEL, Green	Industrial
ASM3I623S00EG-16-SR	3I623S00EG	16-pin 150-mil SOIC-TAPE & REEL, Green	Industrial
ASM3I623S00FG-16-SR	3I623S00FG	16-pin 150-mil SOIC-TAPE & REEL, Green	Industrial
ASM3P623S00DG-16-TT	3P623S00DG	16-pin 4.4-mm TSSOP - TUBE, Green	Commercial
ASM3P623S00EG-16-TT	3P623S00EG	16-pin 4.4-mm TSSOP - TUBE, Green	Commercial
ASM3P623S00FG-16-TT	3P623S00FG	16-pin 4.4-mm TSSOP - TUBE, Green	Commercial
ASM3I623S00DG-16-TT	3I623S00DG	16-pin 4.4-mm TSSOP - TUBE, Green	Industrial
ASM3I623S00EG-16-TT	3I623S00EG	16-pin 4.4-mm TSSOP - TUBE, Green	Industrial
ASM3I623S00FG-16-TT	3I623S00FG	16-pin 4.4-mm TSSOP - TUBE, Green	Industrial
ASM3P623S00DG-16-TR	3P623S00DG	16-pin 4.4-mm TSSOP - TAPE & REEL, Green	Commercial
ASM3P623S00EG-16-TR	3P623S00EG	16- pin 4.4-mm TSSOP - TAPE & REEL, Green	Commercial
ASM3P623S00FG-16-TR	3P623S00FG	16- pin 4.4-mm TSSOP - TAPE & REEL, Green	Commercial
ASM3I623S00DG-16-TR	3I623S00DG	16-pin 4.4-mm TSSOP - TAPE & REEL, Green	Industrial
ASM3I623S00EG-16-TR	3I623S00EG	16- pin 4.4-mm TSSOP - TAPE & REEL, Green	Industrial
ASM3I623S00FG-16-TR	3I623S00FG	16- pin 4.4-mm TSSOP - TAPE & REEL, Green	Industrial
ASM3P623S00AG-08-ST	3P623S00AG	8-pin 150-mil SOIC-TUBE, Green	Commercial
ASM3P623S00BG-08-ST	3P623S00BG	8-pin 150-mil SOIC- TUBE, Green	Commercial
ASM3P623S00CG-08-ST	3P623S00CG	8-pin 150-mil SOIC- TUBE, Green	Commercial
ASM3I623S00AG-08-ST	3I623S00AG	8-pin 150-mil SOIC-TUBE, Green	Industrial
ASM3I623S00BG-08-ST	3I623S00BG	8-pin 150-mil SOIC- TUBE, Green	Industrial
ASM3I623S00CG-08-ST	3I623S00CG	8-pin 150-mil SOIC- TUBE, Green	Industrial
ASM3P623S00AG-08-SR	3P623S00AG	8-pin 150-mil SOIC-TAPE & REEL, Green	Commercial
ASM3P623S00BG-08-SR	3P623S00BG	8-pin 150-mil SOIC-TAPE & REEL, Green	Commercial
ASM3P623S00CG-08-SR	3P623S00CG	8-pin 150-mil SOIC-TAPE & REEL, Green	Commercial
ASM3I623S00AG-08-SR	3I623S00AG	8-pin 150-mil SOIC-TAPE & REEL, Green	Industrial

Notice: The information in this document is subject to change without notice.

Ordering Codes (cont'd)

Ordering Code	Marking	Package Type	Operating Range
ASM3I623S00BG-08-SR	3I623S00BG	8-pin 150-mil SOIC-TAPE & REEL, Green	Industrial
ASM3I623S00CG-08-SR	3I623S00CG	8-pin 150-mil SOIC-TAPE & REEL, Green	Industrial
ASM3P623S00AG-08-TT	3P623S00AG	8-pin 4.4-mm TSSOP - TUBE, Green	Commercial
ASM3P623S00BG-08-TT	3P623S00BG	8-pin 4.4-mm TSSOP - TUBE, Green	Commercial
ASM3P623S00CG-08-TT	3P623S00CG	8-pin 4.4-mm TSSOP - TUBE, Green	Commercial
ASM3I623S00AG-08-TT	3I623S00AG	8-pin 4.4-mm TSSOP - TUBE, Green	Industrial
ASM3I623S00BG-08-TT	3I623S00BG	8-pin 4.4-mm TSSOP - TUBE, Green	Industrial
ASM3I623S00CG-08-TT	3I623S00BG	8-pin 4.4-mm TSSOP - TUBE, Green	Industrial
ASM3P623S00AG-08-TR	3P623S00AG	8-pin 4.4-mm TSSOP - TAPE & REEL, Green	Commercial
ASM3P623S00BG-08-TR	3P623S00BG	8- pin 4.4-mm TSSOP - TAPE & REEL, Green	Commercial
ASM3P623S00CG-08-TR	3P623S00CG	8-pin 4.4-mm TSSOP - TAPE & REEL, Green	Commercial
ASM3I623S00AG-08-TR	3I623S00AG	8-pin 4.4-mm TSSOP - TAPE & REEL, Green	Industrial
ASM3I623S00BG-08-TR	3I623S00BG	8-pin 4.4-mm TSSOP - TAPE & REEL, Green	Industrial
ASM3I623S00CG-08-TR	3I623S00CG	8-pin 4.4-mm TSSOP - TAPE & REEL, Green	Industrial

Device Ordering Information

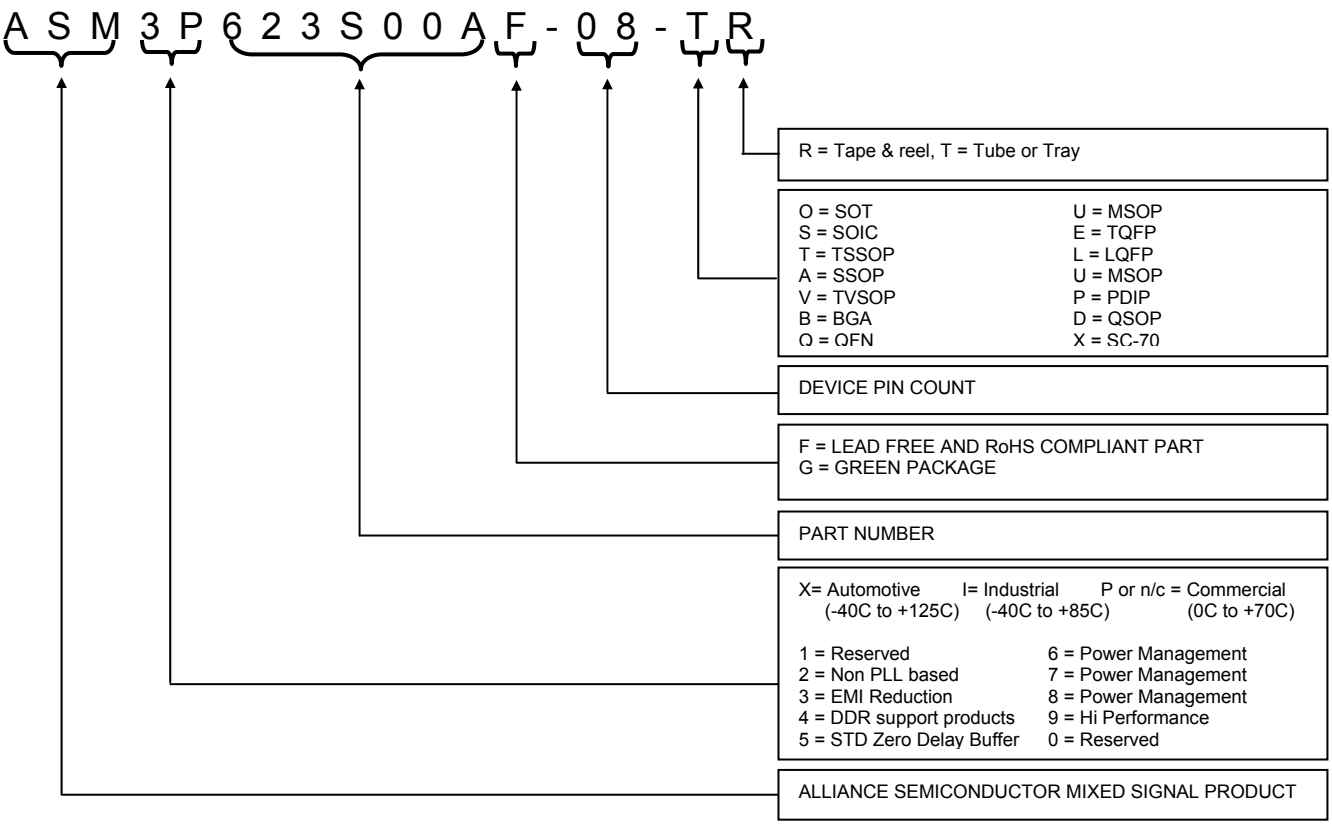

Licensed under US patent #5,488,627, #6,646,463 and #5,631,920.

Notice: The information in this document is subject to change without notice.

Alliance Semiconductor Corporation
2575 Augustine Drive,
Santa Clara, CA 95054
Tel# 408-855-4900
Fax: 408-855-4999
www.alsc.com

Copyright © Alliance Semiconductor
All Rights Reserved
Part Number: ASM3P623S00A/B/C/D/E/F
Document Version: 1.0

Note: This product utilizes US Patent # 6,646,463 Impedance Emulator Patent issued to Alliance Semiconductor, dated 11-11-2003

© Copyright 2003 Alliance Semiconductor Corporation. All rights reserved. Our three-point logo, our name and Intelliwatt are trademarks or registered trademarks of Alliance. All other brand and product names may be the trademarks of their respective companies. Alliance reserves the right to make changes to this document and its products at any time without notice. Alliance assumes no responsibility for any errors that may appear in this document. The data contained herein represents Alliance's best data and/or estimates at the time of issuance. Alliance reserves the right to change or correct this data at any time, without notice. If the product described herein is under development, significant changes to these specifications are possible. The information in this product data sheet is intended to be general descriptive information for potential customers and users, and is not intended to operate as, or provide, any guarantee or warrantee to any user or customer. Alliance does not assume any responsibility or liability arising out of the application or use of any product described herein, and disclaims any express or implied warranties related to the sale and/or use of Alliance products including liability or warranties related to fitness for a particular purpose, merchantability, or infringement of any intellectual property rights, except as express agreed to in Alliance's Terms and Conditions of Sale (which are available from Alliance). All sales of Alliance products are made exclusively according to Alliance's Terms and Conditions of Sale. The purchase of products from Alliance does not convey a license under any patent rights, copyrights; mask works rights, trademarks, or any other intellectual property rights of Alliance or third parties. Alliance does not authorize its products for use as critical components in life-supporting systems where a malfunction or failure may reasonably be expected to result in significant injury to the user, and the inclusion of Alliance products in such life-supporting systems implies that the manufacturer assumes all risk of such use and agrees to indemnify Alliance against all claims arising from such use.