rev 0.5

Timing-Safe™ Peak EMI reduction IC

General Features

- Clock distribution with Timing-Safe™ Peak EMI Reduction
- Input frequency range: 20MHz - 50MHz
- 2 different Spread Selection option
- Spread Spectrum can be turned ON/OFF
- External Input-Output Delay Control option
- Supply Voltage: 3.3V±0.3V
- Commercial and Industrial temperature range
- Packaging Information:
  ASM3P623S00B: 8 pin SOIC, and TSSOP
  ASM3P623S00E:16 pin SOIC, and TSSOP
- The First True Drop-in Solution

Functional Description

ASM3P623S00B/E is a versatile, 3.3V Zero-delay buffer designed to distribute Timing-Safe™ clocks with Peak EMI reduction. ASM3P623S00B is an eight-pin version, accepts one reference input and drives out one low-skew Timing-Safe™ clock. ASM3P623S00E accepts one reference input and drives out eight low-skew Timing-Safe™clocks.

ASM3P623S00B/E has an SS% that selects 2 different Deviation and associated Input-Output Skew (T_{SKEW}). Refer *Spread Spectrum Control and Input-Output Skew* table for details.

ASM3P623S00E has a CLKOUT for adjusting the Input-Output clock delay, depending upon the value of capacitor connected at this pin to GND.

ASM3P623S00B/E operates from a 3.3V supply and is available in two different packages, as shown in the ordering information table, over commercial and Industrial temperature range.

Application

ASM3P623S00B/E is targeted for use in Displays and memory interface systems.

General Block Diagram

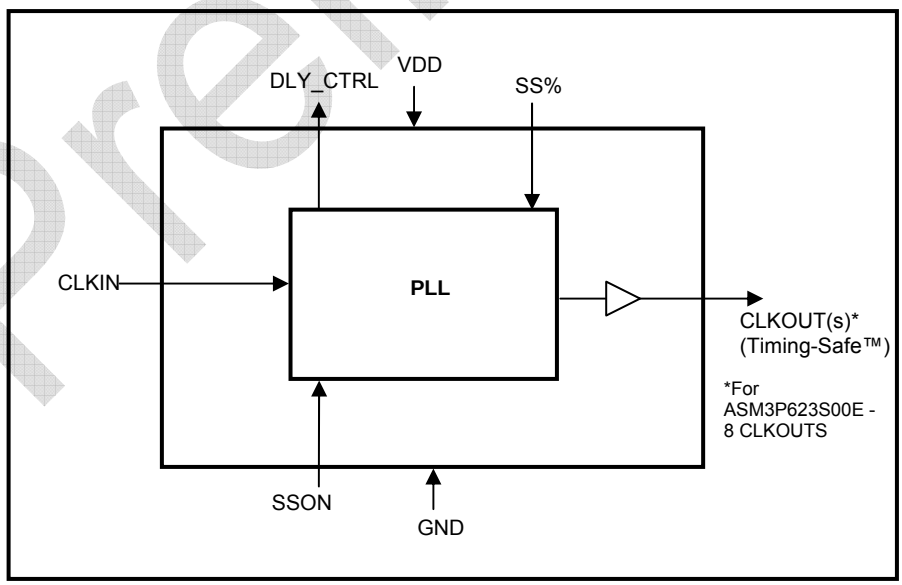

Preliminary

Spread Spectrum Frequency Generation

The clocks in digital systems are typically square waves with a 50% duty cycle and as frequencies increase the edge rates also get faster. Analysis shows that a square wave is composed of fundamental frequency and harmonics. The fundamental frequency and harmonics generate the energy peaks that become the source of EMI. Regulatory agencies test electronic equipment by measuring the amount of peak energy radiated from the equipment. In fact, the peak level allowed decreases as the frequency increases. The standard methods of reducing EMI are to use shielding, filtering, multi-layer PCBs etc. These methods are expensive. Spread spectrum clocking reduces the peak energy by reducing the Q factor of the clock. This is done by slowly modulating the clock frequency. The ASM3P623S00B/E uses the center modulation spread spectrum technique in which the modulated output frequency varies above and below the reference frequency with a specified modulation rate. With center modulation, the average frequency is the same as the unmodulated frequency and there is no performance degradation

Zero Delay and Skew Control

All outputs should be uniformly loaded to achieve Zero Delay between input and output. Since the CLKOUT pin is the internal feedback to the PLL, its relative loading can adjust the input-output delay.

For applications requiring zero input-output delay, all outputs, including CLKOUT, must be equally loaded. Even if CLKOUT is not used, it must have a capacitive load equal to that on other outputs, for obtaining zero-input-output delay.

Timing-Safe™ technology

Timing-Safe™ technology is the ability to modulate a clock source with Spread Spectrum technology and maintain synchronization with any associated data path.

Preliminary

Notice: The information in this document is subject to change without notice.

Pin Configuration for ASM3P623S00B

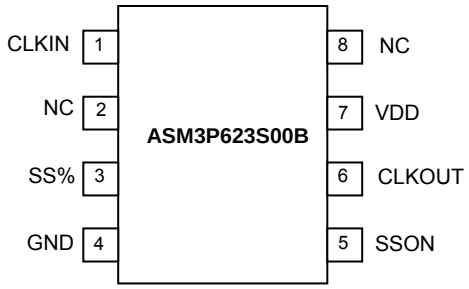

Pin Description for ASM3P623S00B

Pin #	Pin Name	Type	Description
1	CLKIN[1]	I	External reference Clock input , 5V tolerant input
2	NC		No Connect
3	SS%[3]	I	Spread Spectrum Selection. Has an internal pull up resistor
4	GND	P	Ground
5	SSON[3]	I	Spread Spectrum enable and disable option When SSON is HIGH, the spread spectrum is enabled and when LOW, it turns off the spread spectrum. Has an internal pull up resistor
6	CLKOUT[2]	O	Buffered clock output[4]
7	VDD	P	3.3V supply
8	NC		No Connect

Preliminary

Notice: The information in this document is subject to change without notice.

Pin Configuration

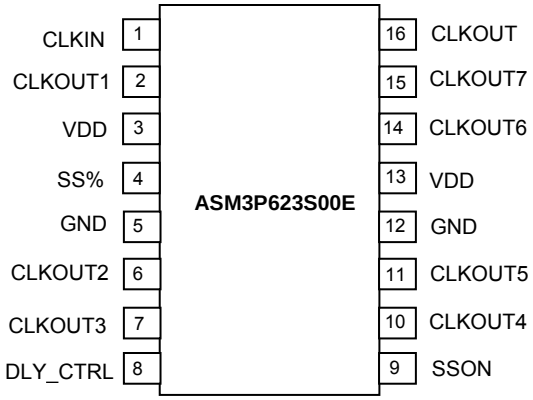

Pin Description for ASM3P623S00E

Pin #	Pin Name	Type	Description
1	CLKIN[1]	I	External reference Clock input, 5V tolerant input
2	CLKOUT1[2]	O	Buffered clock output[4]
3	V_{DD}	P	3.3V supply
4	SS%[3]	I	Spread Spectrum Selection. Refer *Spread Spectrum Control and Input-Output Skew* Table. Has an internal pull up resistor
5	GND	P	Ground
6	CLKOUT2[2]	O	Buffered clock output[4]
7	CLKOUT3[2]	O	Buffered clock output[4]
8	DLY_CTRL	O	External Input-Output Delay control.
9	SSON[3]	I	Spread Spectrum enable and disable option. When SSON is HIGH, the spread spectrum is enabled and when LOW, it turns off the spread spectrum. Has an internal pull up resistor
10	CLKOUT4[2]	O	Buffered clock output[4]
11	CLKOUT5[2]	O	Buffered clock output[4]
12	GND	P	Ground
13	V_{DD}	P	3.3V supply
14	CLKOUT6[2]	O	Buffered clock output[4]
15	CLKOUT7[2]	O	Buffered clock output[4]
16	CLKOUT[2]	O	Buffered clock output[4]

Notes: 1.Weak pull down
2. Weak pull-down on all outputs
3. Weak pull-up on these Inputs
4. Buffered clock output is Timing-Safe™

Preliminary

Notice: The information in this document is subject to change without notice.

Spread Spectrum Control and Input-Output Skew Table

Device	Input Frequency	SS %	Deviation	Input-Output Skew ($\pm T_{SKEW}$)
ASM3P623S00B/E	32MHz	0	±0.25 %	0.125
		1	±0.50 %	0.25

Note: T_{SKEW} is measured in units of the Clock Period

Absolute Maximum Ratings

Symbol	Parameter	Rating	Unit
VDD	Supply Voltage to Ground Potential	-0.5 to +4.6	V
VIN	DC Input Voltage (CLKIN)	-0.5 to +7	
T_{STG}	Storage temperature	-65 to +125	°C
T_s	Max. Soldering Temperature (10 sec)	260	°C
T_J	Junction Temperature	150	°C
T_{DV}	Static Discharge Voltage (As per JEDEC STD22- A114-B)	2	KV

Note: These are stress ratings only and are not implied for functional use. Exposure to absolute maximum ratings for prolonged periods of time may affect device reliability.

Operating Conditions

Parameter	Description	Min	Max	Unit
VDD	Supply Voltage	3.0	3.6	V
T_A	Operating Temperature (Ambient Temperature)	-40	+85	°C
C_L	Load Capacitance		30	pF
C_{IN}	Input Capacitance		7	pF

Electrical Characteristics

Parameter	Description	Test Conditions	Min	Typ	Max	Unit
V_{IL}	Input LOW Voltage[5]				0.8	V
V_{IH}	Input HIGH Voltage[5]		2.0			V
I_{IL}	Input LOW Current	V_{IN} = 0V			50	µA
I_{IH}	Input HIGH Current	V_{IN} = VDD			100	µA
V_{OL}	Output LOW Voltage[6]	I_{OL} = 8mA			0.4	V
V_{OH}	Output HIGH Voltage[6]	I_{OH} = -8mA	2.4			V
I_{DD}	Supply Current	Unloaded outputs			27	mA
Z_o	Output Impedance			23		Ω

Note: 5. CLKIN input has a threshold voltage of VDD/2
6. Parameter is guaranteed by design and characterization. Not 100% tested in production

Preliminary

Notice: The information in this document is subject to change without notice.

Switching Characteristics

Parameter	Test Conditions	Min	Typ	Max	Unit
Input Frequency		4		20	MHz
Output Frequency	30pF load	4		20	MHz
Duty Cycle [6,7] = (t_2 / t_1) * 100	Measured at VDD/2	40	50	60	%
Output Rise Time [7, 8]	Measured between 0.8V and 2.0V			2.5	nS
Output Fall Time [7, 8]	Measured between 2.0V and 0.8V			2.5	nS
Output-to-output skew [7, 8]	All outputs equally loaded with SSOFF			250	pS
Delay, CLKIN Rising Edge to CLKOUT Rising Edge [8]	Measured at VDD /2 with SSOFF			±350	pS
Device-to-Device Skew [8]	Measured at VDD/2 on the CLKOUT pins of the device			700	pS
Cycle-to-Cycle Jitter [7, 8]	Loaded outputs			±250	pS
PLL Lock Time [8]	Stable power supply, valid clock presented on CLKIN pin			1.0	mS

Note: 7. All parameters specified with 30pF loaded outputs.
8. Parameter is guaranteed by design and characterization. Not 100% tested in production

Switching Waveforms

Duty Cycle Timing

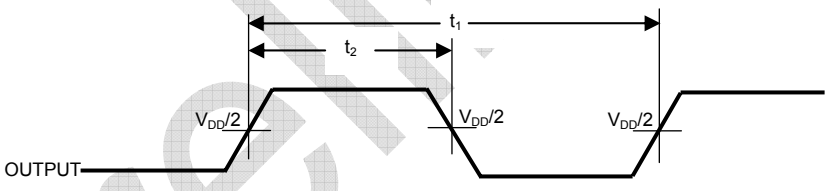

All Outputs Rise/Fall Time

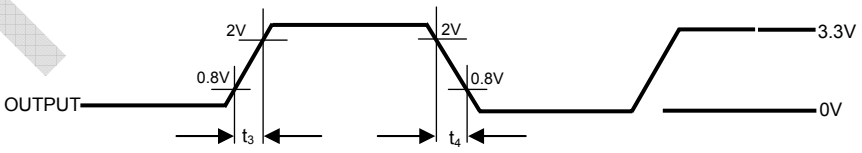

Preliminary

Notice: The information in this document is subject to change without notice.

Output - Output Skew

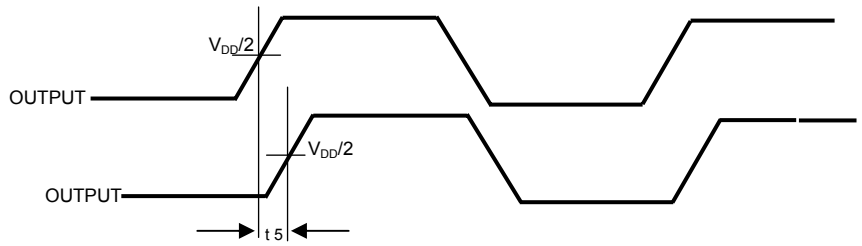

Input - Output Propagation Delay

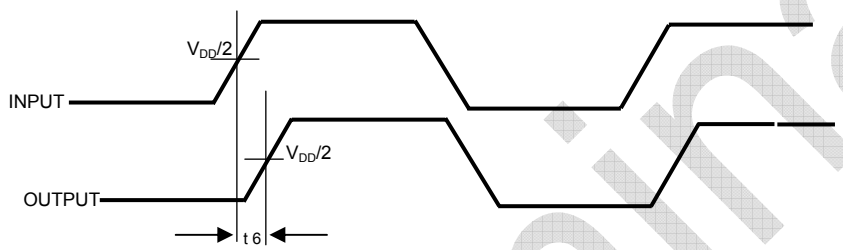

Device - Device Skew

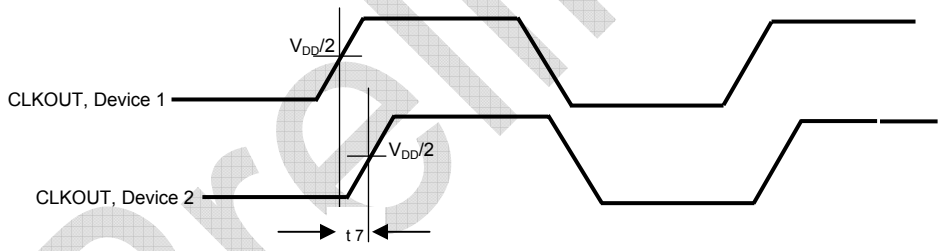

Preliminary

Notice: The information in this document is subject to change without notice.

Input-Output Skew

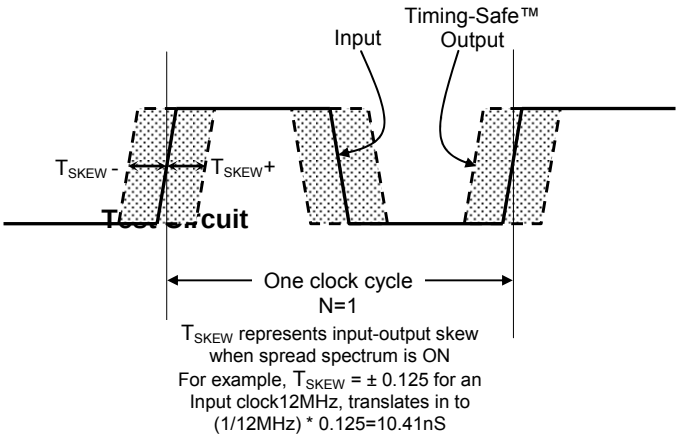

T_{SKEW} represents input-output skew when spread spectrum is ON
For example, T_{SKEW} = ± 0.125 for an Input clock12MHz, translates in to (1/12MHz) * 0.125=10.41nS

Test Circuit

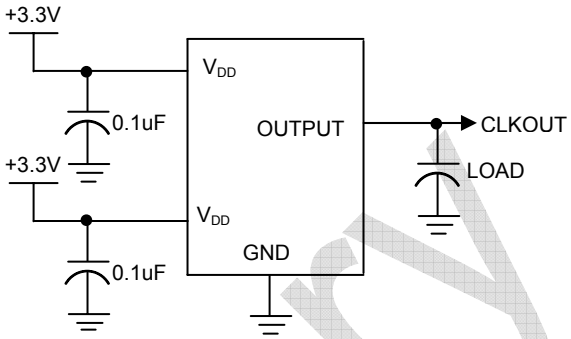

A Typical example of Timing-Safe™ waveform

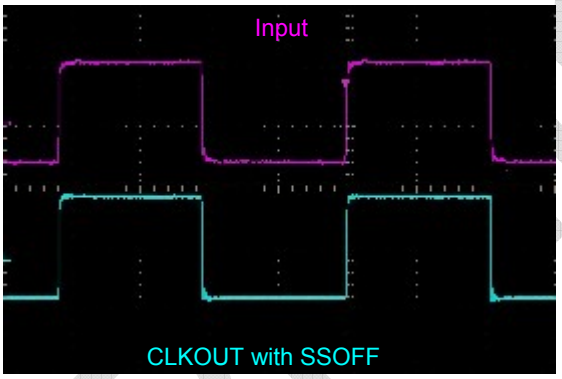

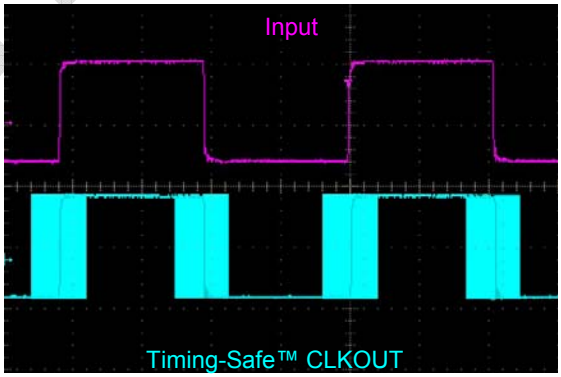

Preliminary

Notice: The information in this document is subject to change without notice.

Package Information

8-lead (150-mil) SOIC Package

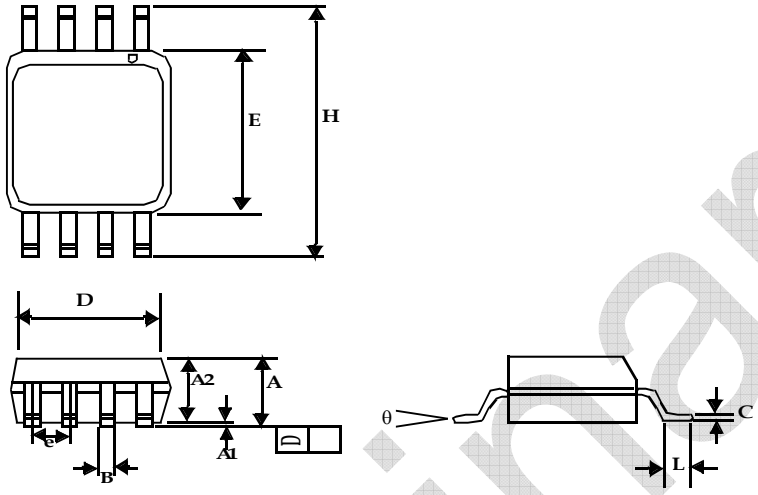

Symbol	Dimensions			
	Inches		Millimeters	
	Min	Max	Min	Max
A1	0.004	0.010	0.10	0.25
A	0.053	0.069	1.35	1.75
A2	0.049	0.059	1.25	1.50
B	0.012	0.020	0.31	0.51
C	0.007	0.010	0.18	0.25
D	0.193 BSC		4.90 BSC	
E	0.154 BSC		3.91 BSC	
e	0.050 BSC		1.27 BSC	
H	0.236 BSC		6.00 BSC	
L	0.016	0.050	0.41	1.27
θ	0°	8°	0°	8°

Preliminary

Notice: The information in this document is subject to change without notice.

8-lead TSSOP (4.40-MM Body)

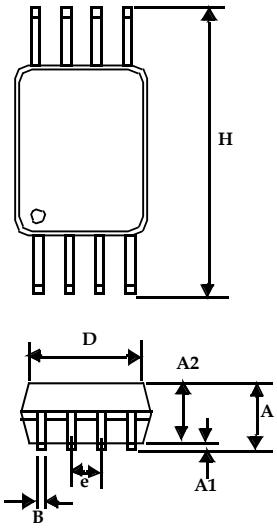

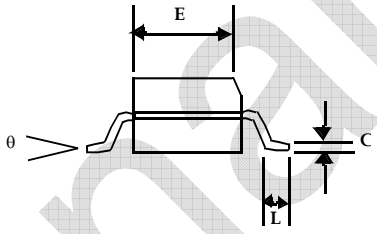

Symbol	Dimensions			
	Inches		Millimeters	
	Min	Max	Min	Max
A		0.043		1.10
A1	0.002	0.006	0.05	0.15
A2	0.033	0.037	0.85	0.95
B	0.008	0.012	0.19	0.30
c	0.004	0.008	0.09	0.20
D	0.114	0.122	2.90	3.10
E	0.169	0.177	4.30	4.50
e	0.026 BSC		0.65 BSC	
H	0.252 BSC		6.40 BSC	
L	0.020	0.028	0.50	0.70
θ	0°	8°	0°	8°

Preliminary

Notice: The information in this document is subject to change without notice.

16-lead (150 Mil) Molded SOIC Package

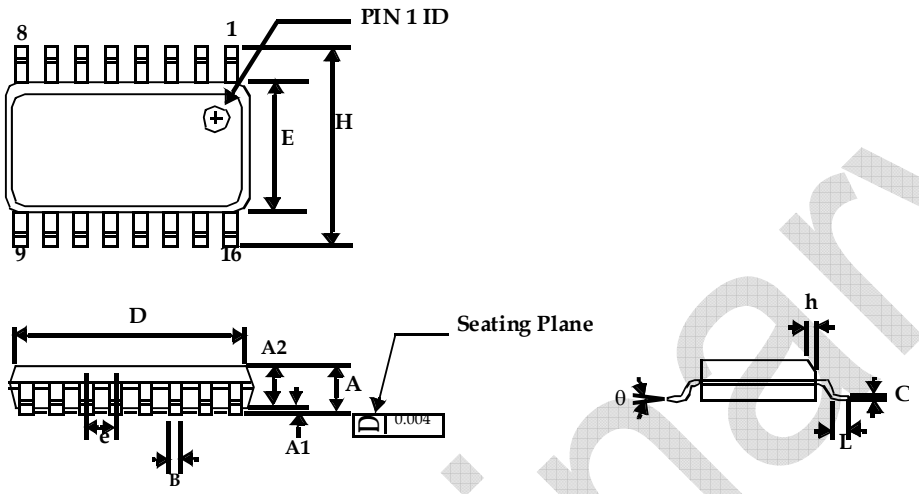

Symbol	Dimensions			
	Inches		Millimeters	
	Min	Max	Min	Max
A	0.053	0.069	1.35	1.75
A1	0.004	0.010	0.10	0.25
A2	0.049	0.059	1.25	1.50
B	0.013	0.022	0.33	0.53
C	0.008	0.012	0.19	0.27
D	0.386	0.394	9.80	10.01
E	0.150	0.157	3.80	4.00
e	0.050 BSC		1.27 BSC	
H	0.228	0.244	5.80	6.20
h	0.010	0.016	0.25	0.41
L	0.016	0.035	0.40	0.89
θ	0°	8°	0°	8°

Preliminary

Notice: The information in this document is subject to change without notice.

16-lead TSSOP (4.40-MM Body)

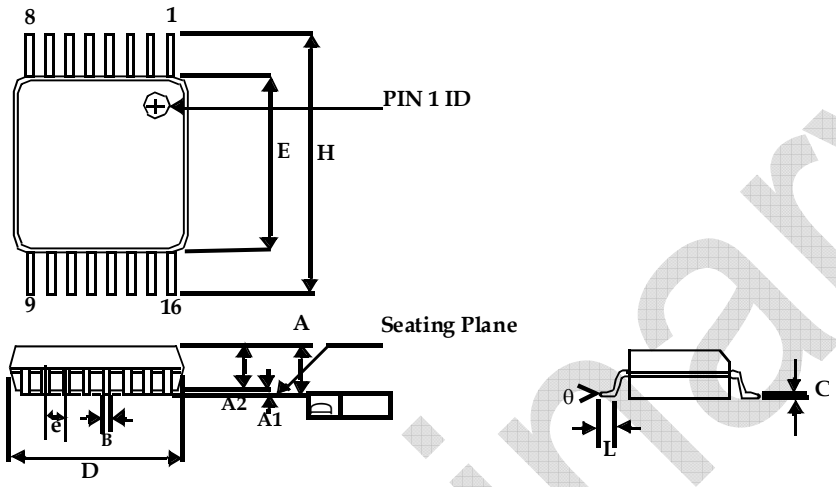

Symbol	Dimensions			
	Inches		Millimeters	
	Min	Max	Min	Max
A		0.043		1.20
A1	0.002	0.006	0.05	0.15
A2	0.031	0.041	0.80	1.05
B	0.007	0.012	0.19	0.30
C	0.004	0.008	0.09	0.20
D	0.193	0.201	4.90	5.10
E	0.169	0.177	4.30	4.50
e	0.026 BSC		0.65 BSC	
H	0.252 BSC		6.40 BSC	
L	0.020	0.030	0.50	0.75
θ	0°	8°	0°	8°

Preliminary

Notice: The information in this document is subject to change without notice.

Ordering Code

Ordering Code	Marking	Package Type	Temperature
ASM3P623S00BF-08-ST	3P623S00BF	8-pin 150-mil SOIC-TUBE, Pb Free	Commercial
ASM3I623S00BF-08-ST	3I623S00BF	8-pin 150-mil SOIC-TUBE, Pb Free	Industrial
ASM3P623S00BF-08-SR	3P623S00BF	8-pin 150-mil SOIC-TAPE & REEL, Pb Free	Commercial
ASM3I623S00BF-08-SR	3I623S00BF	8-pin 150-mil SOIC-TAPE & REEL, Pb Free	Industrial
ASM3P623S00BF-08-TT	3P623S00BF	8-pin 4.4-mm TSSOP - TUBE, Pb Free	Commercial
ASM3I623S00BF-08-TT	3I623S00BF	8-pin 4.4-mm TSSOP - TUBE, Pb Free	Industrial
ASM3P623S00BF-08-TR	3P623S00BF	8-pin 4.4-mm TSSOP - TAPE & REEL, Pb Free	Commercial
ASM3I623S00BF-08-TR	3I623S00BF	8-pin 4.4-mm TSSOP - TAPE & REEL, Pb Free	Industrial
ASM3P623S00EF-16-ST	3P623S00EF	16-pin 150-mil SOIC-TUBE, Pb Free	Commercial
ASM3I623S00EF-16-ST	3I623S00EF	16-pin 150-mil SOIC-TUBE, Pb Free	Industrial
ASM3P623S00EF-16-SR	3P623S00EF	16-pin 150-mil SOIC-TAPE & REEL, Pb Free	Commercial
ASM3I623S00EF-16-SR	3I623S00EF	16-pin 150-mil SOIC-TAPE & REEL, Pb Free	Industrial
ASM3P623S00EF-16-TT	3P623S00EF	16-pin 4.4-mm TSSOP - TUBE, Pb Free	Commercial
ASM3I623S00EF-16-TT	3I623S00EF	16-pin 4.4-mm TSSOP - TUBE, Pb Free	Industrial
ASM3P623S00EF-16-TR	3P623S00EF	16-pin 4.4-mm TSSOP - TAPE & REEL, Pb Free	Commercial
ASM3I623S00EF-16-TR	3I623S00EF	16-pin 4.4-mm TSSOP - TAPE & REEL, Pb Free	Industrial
ASM3P623S00BG-08-ST	3P623S00BG	8-pin 150-mil SOIC-TUBE, Pb Free	Commercial
ASM3I623S00BG-08-ST	3I623S00BG	8-pin 150-mil SOIC-TUBE, Pb Free	Industrial
ASM3P623S00BG-08-SR	3P623S00BG	8-pin 150-mil SOIC-TAPE & REEL, Pb Free	Commercial
ASM3I623S00BG-08-SR	3I623S00BG	8-pin 150-mil SOIC-TAPE & REEL, Pb Free	Industrial
ASM3P623S00BG-08-TT	3P623S00BG	8-pin 4.4-mm TSSOP - TUBE, Pb Free	Commercial
ASM3I623S00BG-08-TT	3I623S00BG	8-pin 4.4-mm TSSOP - TUBE, Pb Free	Industrial
ASM3P623S00BG-08-TR	3P623S00BG	8-pin 4.4-mm TSSOP - TAPE & REEL, Pb Free	Commercial
ASM3I623S00BG-08-TR	3I623S00BG	8-pin 4.4-mm TSSOP - TAPE & REEL, Pb Free	Industrial
ASM3P623S00EG-16-ST	3P623S00EG	16-pin 150-mil SOIC-TUBE, Green	Commercial
ASM3I623S00EG-16-ST	3I623S00EG	16-pin 150-mil SOIC-TUBE, Green	Industrial
ASM3P623S00EG-16-SR	3P623S00EG	16-pin 150-mil SOIC-TAPE & REEL, Green	Commercial
ASM3I623S00EG-16-SR	3I623S00EG	16-pin 150-mil SOIC-TAPE & REEL, Green	Industrial
ASM3P623S00EG-16-TT	3P623S00EG	16-pin 4.4-mm TSSOP - TUBE, Green	Commercial
ASM3I623S00EG-16-TT	3I623S00EG	16-pin 4.4-mm TSSOP - TUBE, Green	Industrial
ASM3P623S00EG-16-TR	3P623S00EG	16-pin 4.4-mm TSSOP - TAPE & REEL, Green	Commercial
ASM3I623S00EG-16-TR	3I623S00EG	16-pin 4.4-mm TSSOP - TAPE & REEL, Green	Industrial

Preliminary

Notice: The information in this document is subject to change without notice.

Device Ordering Information

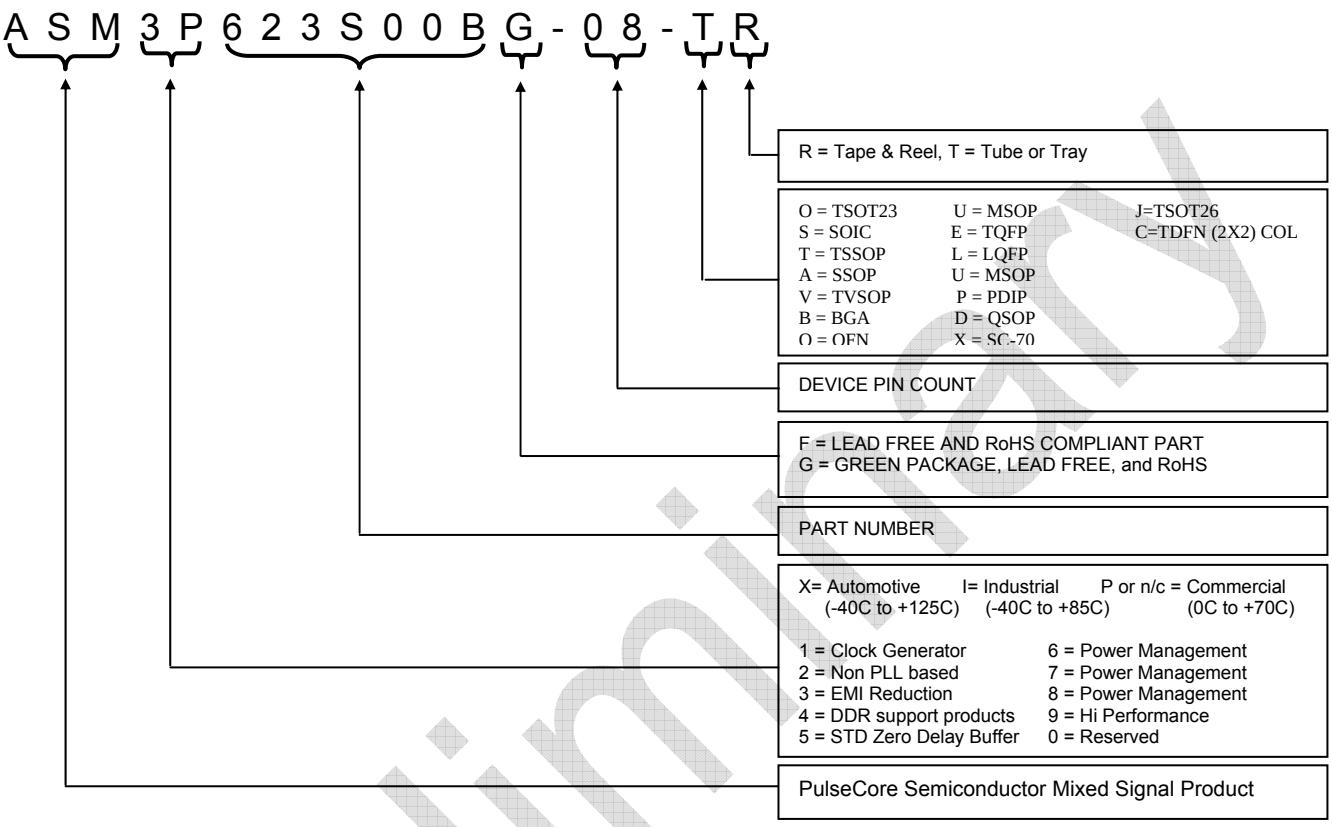

Preliminary

Licensed under US patent #5,488,627, #6,646,463 and #5,631,920.

Notice: The information in this document is subject to change without notice.

Preliminary

PulseCore Semiconductor Corporation
1715 S. Bascom Ave Suite 200
Campbell, CA 95008
Tel: 408-879-9077
Fax: 408-879-9018
www.pulsecoresemi.com

Copyright © PulseCore Semiconductor
All Rights Reserved
Preliminary Information
Part Number: ASM3P623S00B/E
Document Version: 0.5

Note: This product utilizes US Patent # 6,646,463 Impedance Emulator Patent issued to PulseCore Semiconductor, dated 11-11-2003
Many PulseCore Semiconductor products are protected by issued patents or by applications for patent

© Copyright 2006 PulseCore Semiconductor Corporation. All rights reserved. Our logo and name are trademarks or registered trademarks of PulseCore Semiconductor. All other brand and product names may be the trademarks of their respective companies. PulseCore reserves the right to make changes to this document and its products at any time without notice. PulseCore assumes no responsibility for any errors that may appear in this document. The data contained herein represents PulseCore's best data and/or estimates at the time of issuance. PulseCore reserves the right to change or correct this data at any time, without notice. If the product described herein is under development, significant changes to these specifications are possible. The information in this product data sheet is intended to be general descriptive information for potential customers and users, and is not intended to operate as, or provide, any guarantee or warrantee to any user or customer. PulseCore does not assume any responsibility or liability arising out of the application or use of any product described herein, and disclaims any express or implied warranties related to the sale and/or use of PulseCore products including liability or warranties related to fitness for a particular purpose, merchantability, or infringement of any intellectual property rights, except as express agreed to in PulseCore's Terms and Conditions of Sale (which are available from PulseCore). All sales of PulseCore products are made exclusively according to PulseCore's Terms and Conditions of Sale. The purchase of products from PulseCore does not convey a license under any patent rights, copyrights; mask works rights, trademarks, or any other intellectual property rights of PulseCore or third parties. PulseCore does not authorize its products for use as critical components in life-supporting systems where a malfunction or failure may reasonably be expected to result in significant injury to the user, and the inclusion of PulseCore products in such life-supporting systems implies that the manufacturer assumes all risk of such use and agrees to indemnify PulseCore against all claims arising from such use.

Notice: The information in this document is subject to change without notice.