Low Frequency EMI Reduction

Features

- FCC approved method of EMI attenuation.
- Generates a low EMI spread spectrum of the input clock frequency.
- Optimized for input frequency range between 27MHz – 55MHz.
- Internal loop filter minimizes external components and board space.
- Frequency Deviation: ±1.7%.
- Low inherent Cycle-to-cycle jitter.
- 3.3 V ± 0.3V Operating Voltage.
- Ultra low power CMOS design:3.0 mA @ 3.3 V.
- Supports notebook VGA and other LCD timing controller applications.
- Available in 8-pin SOIC and TSSOP Packages.

Product Description

The ASM3P2531A is a versatile spread spectrum frequency modulator designed specifically for a wide range of clock frequencies. It reduces electromagnetic interference (EMI) at the clock source allowing system-wide reduction of EMI of downstream clock and data dependent signals. It allows significant system cost savings by reducing the number of circuit board layers and shielding traditionally required to pass EMI regulations.

The ASM3P2531A modulates the output of a single PLL in order to spread the bandwidth of a synthesized clock, thereby decreasing the peak amplitudes of its harmonics. This result in significantly lower system EMI compared to the typical narrow band signal produced by oscillators and most clock generators. Lowering EMI by increasing a signal's bandwidth is called spread spectrum clock generation.

The ASM3P2531A uses the most efficient and optimized modulation profile approved by the FCC and is implemented by using a proprietary all-digital method.

Applications

The ASM3P2531A is targeted toward the notebook VGA chip and other displays using an LVDS interface, PC peripheral devices, and embedded systems.

Block Diagram

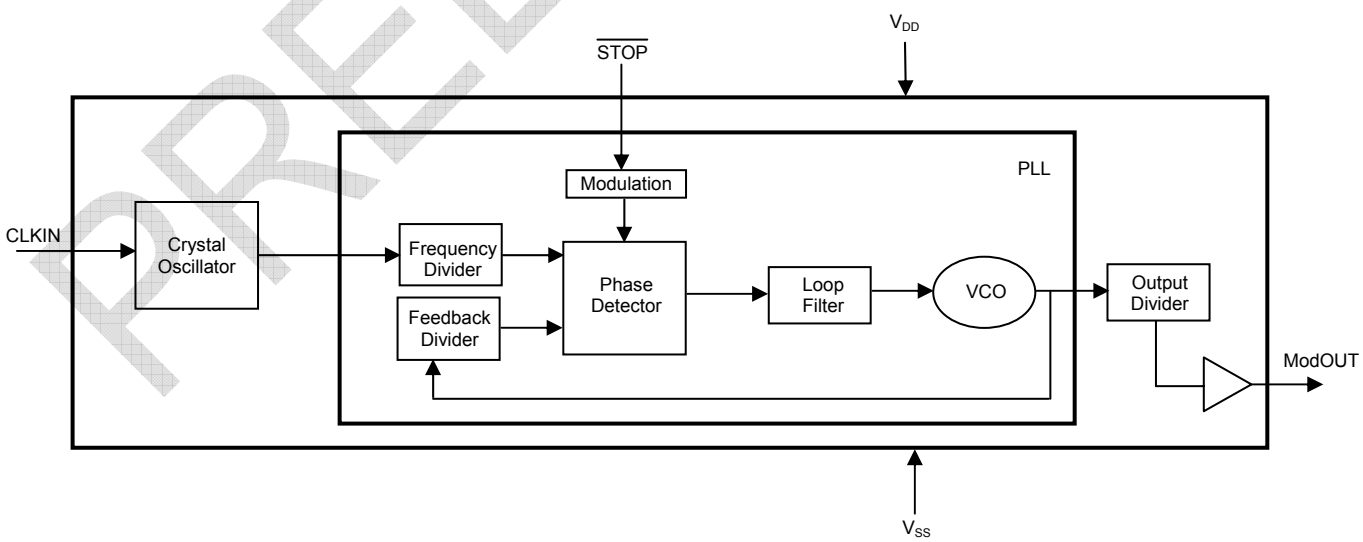

PRELIMINARY

PulseCore Semiconductor Corporation
1715 S. Bascom Ave Suite 200, Campbell, CA 95008 • Tel: 408-879-9077 • Fax: 408-879-9018
www.pulsecoresemi.com

Notice: The information in this document is subject to change without notice.

rev 1.4

Pin Configuration (8-pin SOIC and TSSOP Packages)

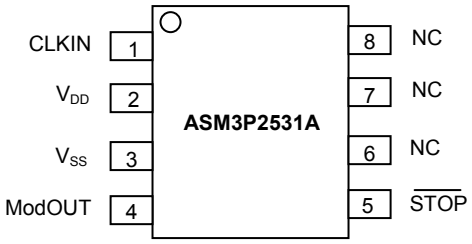

Spread Range Selection, V_{DD} = 3.3 V

CLKIN frequency	Spreading range	Modulation rate
27MHz – 55MHz	± 1.7%	(CLKIN/1280) KHz

Pin Description

Pin#	Pin Name	Type	Description
1	CLKIN	I	External reference frequency input.
2	V_{DD}	P	Power supply for the entire chip.
3	V_{SS}	P	Ground to entire chip.
4	ModOUT	O	Spread spectrum clock output or reference output.(Refer Standby Mode Selection.)
5	$\overline{STOP}$	I	Active LOW signal. When HIGH, enables ModOUT and when LOW, ModOUT would be LOW.
6	NC	-	No connect.
7	NC	-	No connect.
8	NC	-	No connect.

PRELIMINARY

Notice: The information in this document is subject to change without notice.

Schematic for a Typical Application

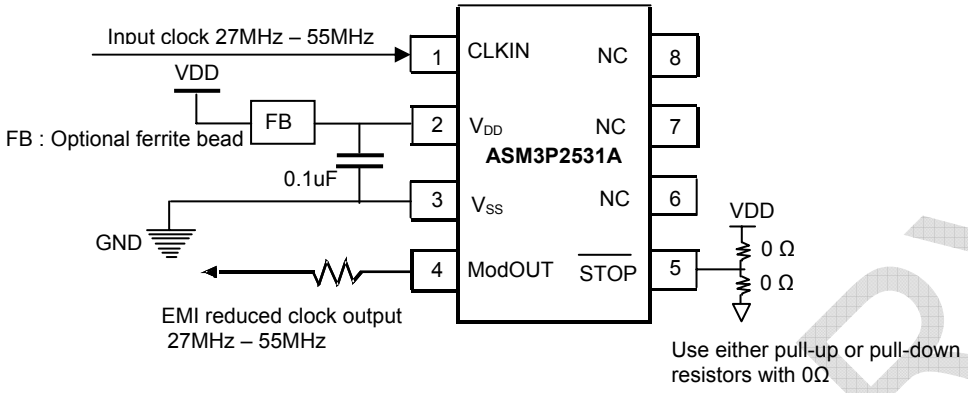

Absolute Maximum Ratings

Symbol	Parameter	Rating	Unit
V_{DD}, V_{IN}	Voltage on any pin with respect to Ground	-0.5 to +4.6	V
T_{STG}	Storage temperature	-65 to +125	°C
T_A	Operating temperature	-40 to +85	°C
T_s	Max. Soldering Temperature (10 sec)	260	°C
T_J	Junction Temperature	150	°C
T_{DV}	Static Discharge Voltage (As per JEDEC STD22- A114-B)	2	KV

Note: These are stress ratings only and are not implied for functional use. Exposure to absolute maximum ratings for prolonged periods of time may affect device reliability.

PRELIMINARY

Notice: The information in this document is subject to change without notice.

rev 1.4

DC Electrical Characteristics

Symbol	Parameter		Min	Typ	Max	Unit
V_{IL}	Input low voltage		V_{SS} - 0.3		0.8	V
V_{IH}	Input high voltage		2.0		V_{DD} + 0.3	V
I_{IL}	Input low current				-35	µA
I_{IH}	Input high current				35	µA
V_{OL}	Output low voltage	V_{DD} = 3.3V, I_{OL} = 6 mA			0.4	V
V_{OH}	Output high voltage	V_{DD} = 3.3V, I_{OH} = 15 mA	2.5			V
I_{DD}	Static supply current standby mode			3.0		mA
I_{CC}	Dynamic supply current	3.3V and 15pF loading	10		14	mA
V_{DD}	Operating voltage		3.0	3.3	3.6	V
t_{ON}	Power-up time (first locked cycle after power up)			0.18		mS
Z_{OUT}	Clock output impedance			50		Ω

AC Electrical Characteristics

Symbol	Parameter		Min	Typ	Max	Unit
f_{IN}	Input frequency		27		55	MHz
f_{OUT}	Output frequency		27		55	MHz
t_{LH} [1]	Output rise time	Measured from 0.8 V to 2.0 V	0.4	0.6	1.2	nS
t_{HL} [1]	Output fall time	Measured from 2.0 V to 0.8 V	0.4	0.6	1.2	nS
t_{JC}	Jitter (Cycle to cycle)				360	pS
T_D	Output duty cycle		45	50	55	%

Note 1: t_{LH} and t_{HL} are measured into a capacitive load of 15pF

PRELIMINARY

Notice: The information in this document is subject to change without notice.

Package Information

8-lead (150-mil) SOIC Package

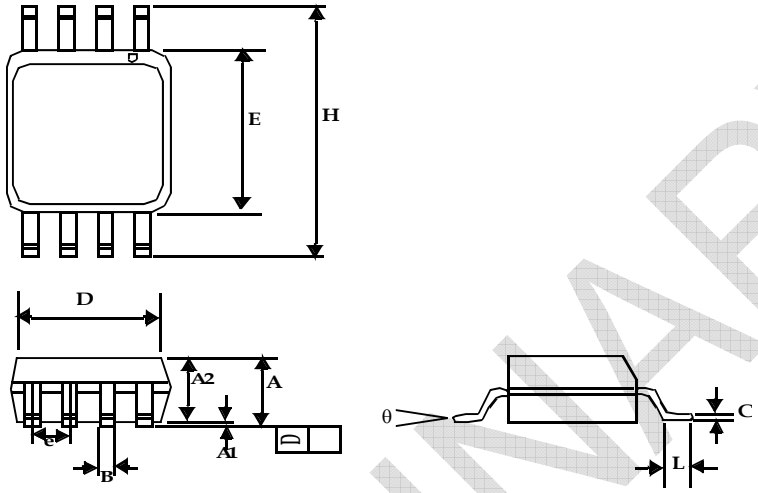

Symbol	Dimensions			
	Inches		Millimeters	
	Min	Max	Min	Max
A1	0.004	0.010	0.10	0.25
A	0.053	0.069	1.35	1.75
A2	0.049	0.059	1.25	1.50
B	0.012	0.020	0.31	0.51
C	0.007	0.010	0.18	0.25
D	0.193 BSC		4.90 BSC	
E	0.154 BSC		3.91 BSC	
e	0.050 BSC		1.27 BSC	
H	0.236 BSC		6.00 BSC	
L	0.016	0.050	0.41	1.27
θ	0°	8°	0°	8°

PRELIMINARY

Notice: The information in this document is subject to change without notice.

8-lead Thin Shrunk Small Outline Package (4.40-MM Body)

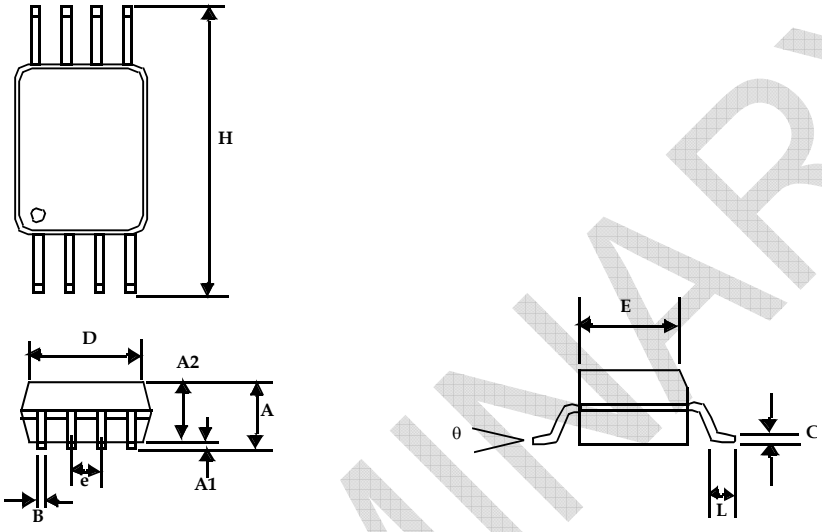

Symbol	Dimensions			
	Inches		Millimeters	
	Min	Max	Min	Max
A		0.043		1.10
A1	0.002	0.006	0.05	0.15
A2	0.033	0.037	0.85	0.95
B	0.008	0.012	0.19	0.30
c	0.004	0.008	0.09	0.20
D	0.114	0.122	2.90	3.10
E	0.169	0.177	4.30	4.50
e	0.026 BSC		0.65 BSC	
H	0.252 BSC		6.40 BSC	
L	0.020	0.028	0.50	0.70
θ	0°	8°	0°	8°

PRELIMINARY

Notice: The information in this document is subject to change without notice.

Ordering Information

Ordering Code	Marking	Package Type	Operating Range
ASM3P2531AF-08ST	3P2531AF	8-pin 150mil SOIC –TUBE, Pb free	Commercial
ASM3P2531AF-08SR	3P2531AF	8-pin 150-mil SOIC -TAPE & REEL, Pb free	Commercial
ASM3I2531AF-08ST	3P2531AF	8-pin 150mil SOIC -TUBE, Pb free	Industrial
ASM3I2531AF-08SR	3P2531AF	8-pin 150-mil SOIC -TAPE & REEL, Pb free	Industrial
ASM3P2531AF-08TT	3P2531AF	8-pin 4.4mm TSSOP -TUBE, Pb free	Commercial
ASM3P2531AF-08TR	3P2531AF	8-pin 4.4mm TSSOP -TAPE & REEL, Pb free	Commercial
ASM3I2531AF-08TT	3P2531AF	8-pin 4.4mm TSSOP -TUBE, Pb free	Industrial
ASM3I2531AF-08TR	3P2531AF	8-pin 4.4mm TSSOP - TAPE & REEL, Pb free	Industrial
ASM3P2531AG-08ST	3P2531AG	8-pin 150mil SOIC –TUBE, Green	Commercial
ASM3P2531AG-08SR	3P2531AG	8-pin 150-mil SOIC -TAPE & REEL, Green	Commercial
ASM3I2531AG-08ST	3P2531AG	8-pin 150mil SOIC -TUBE, Green	Industrial
ASM3I2531AG-08SR	3P2531AG	8-pin 150-mil SOIC -TAPE & REEL, Green	Industrial
ASM3P2531AG-08TT	3P2531AG	8-pin 4.4mm TSSOP -TUBE, Green	Commercial
ASM3P2531AG-08TR	3P2531AG	8-pin 4.4mm TSSOP -TAPE & REEL, Green	Commercial
ASM3I2531AG-08TT	3P2531AG	8-pin 4.4mm TSSOP -TUBE, Green	Industrial
ASM3I2531AG-08TR	3P2531AG	8-pin 4.4mm TSSOP - TAPE & REEL, Green	Industrial

Device Ordering Information

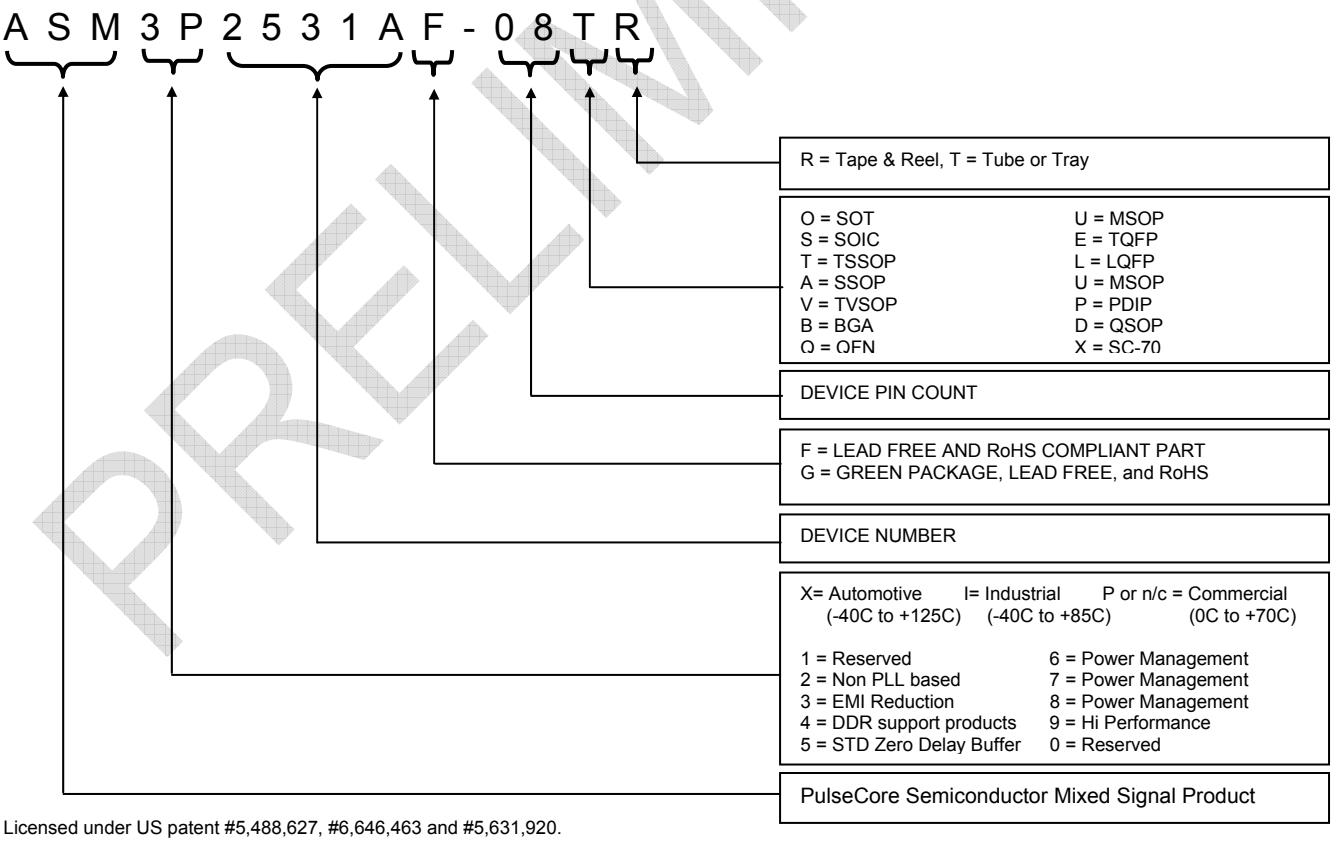

Licensed under US patent #5,488,627, #6,646,463 and #5,631,920.

PRELIMINARY

Notice: The information in this document is subject to change without notice.

PRELIMINARY

PulseCore Semiconductor Corporation
1715 S. Bascom Ave Suite 200
Campbell, CA 95008
Tel: 408-879-9077
Fax: 408-879-9018
www.pulsecoresemi.com

Copyright © PulseCore Semiconductor
All Rights Reserved
Part Number: ASM3P2531A
Document Version: v1.4

Note: This product utilizes US Patent # 6,646,463 Impedance Emulator Patent issued to PulseCore Semiconductor, dated 11-11-2003

© Copyright 2007 PulseCore Semiconductor Corporation. All rights reserved. Our logo and name are trademarks or registered trademarks of PulseCore Semiconductor. All other brand and product names may be the trademarks of their respective companies. PulseCore reserves the right to make changes to this document and its products at any time without notice. PulseCore assumes no responsibility for any errors that may appear in this document. The data contained herein represents PulseCore's best data and/or estimates at the time of issuance. PulseCore reserves the right to change or correct this data at any time, without notice. If the product described herein is under development, significant changes to these specifications are possible. The information in this product data sheet is intended to be general descriptive information for potential customers and users, and is not intended to operate as, or provide, any guarantee or warrantee to any user or customer. PulseCore does not assume any responsibility or liability arising out of the application or use of any product described herein, and disclaims any express or implied warranties related to the sale and/or use of PulseCore products including liability or warranties related to fitness for a particular purpose, merchantability, or infringement of any intellectual property rights, except as express agreed to in PulseCore's Terms and Conditions of Sale (which are available from PulseCore). All sales of PulseCore products are made exclusively according to PulseCore's Terms and Conditions of Sale. The purchase of products from PulseCore does not convey a license under any patent rights, copyrights; mask works rights, trademarks, or any other intellectual property rights of PulseCore or third parties. PulseCore does not authorize its products for use as critical components in life-supporting systems where a malfunction or failure may reasonably be expected to result in significant injury to the user, and the inclusion of PulseCore products in such life-supporting systems implies that the manufacturer assumes all risk of such use and agrees to indemnify PulseCore against all claims arising from such use.

Notice: The information in this document is subject to change without notice.