Notebook LCD Panel EMI Reduction IC

Features

- FCC approved method of EMI attenuation.
- Provides up to 15dB EMI reduction.
- Generates a low EMI Spread Spectrum clock and a non-spread reference clock of the input frequency.
- Optimized for Frequency range from 20 to 40MHz.
- Internal loop filter minimizes external components and board space.
- Low Inherent Cycle-to-Cycle jitter.
- Two spread % selections: -1.25% to -1.75%.
- 3.3V Operating Voltage.
- Low power CMOS design.
- Supports notebook VGA and other LCD timing controller applications.
- Power Down function for mobile application.
- Available in Commercial temperature range.
- Available in 8-pin SOIC and TSSOP Packages.
- RoHS Compliant

Product Description

The ASM3P18S19B is a Versatile Spread Spectrum Frequency Modulator designed specifically for input clock frequencies from 20 to 40MHz. (*Refer Input Frequency and Modulation Rate Table).* The ASM3P18S19B reduces electromagnetic interference (EMI) at the clock source, allowing system wide reduction of EMI of down stream clock and data dependent signals. The ASM3P18S19B allows significant system cost savings by reducing the number of circuit board layers, ferrite beads, shielding, and other passive components that are traditionally required to pass EMI regulations.

The ASM3P18S19B modulates the output of a single PLL in order to "spread" the bandwidth of a synthesized clock, and more importantly, decreases the peak amplitudes of its harmonics. This results in significantly lower system EMI compared to the typical narrow band signal produced by oscillators and most frequency generators. Lowering EMI by increasing a signal's bandwidth is called 'Spread Spectrum Clock Generation'.

The ASM3P18S19B uses the most efficient and optimized modulation profile approved by the FCC and is implemented in a proprietary all digital method.

Applications

The ASM3P18S19B is targeted towards EMI management for memory and LVDS interfaces in mobile graphic chipsets and high-speed digital applications such as PC peripheral devices, consumer electronics, and embedded controller systems.

Block Diagram

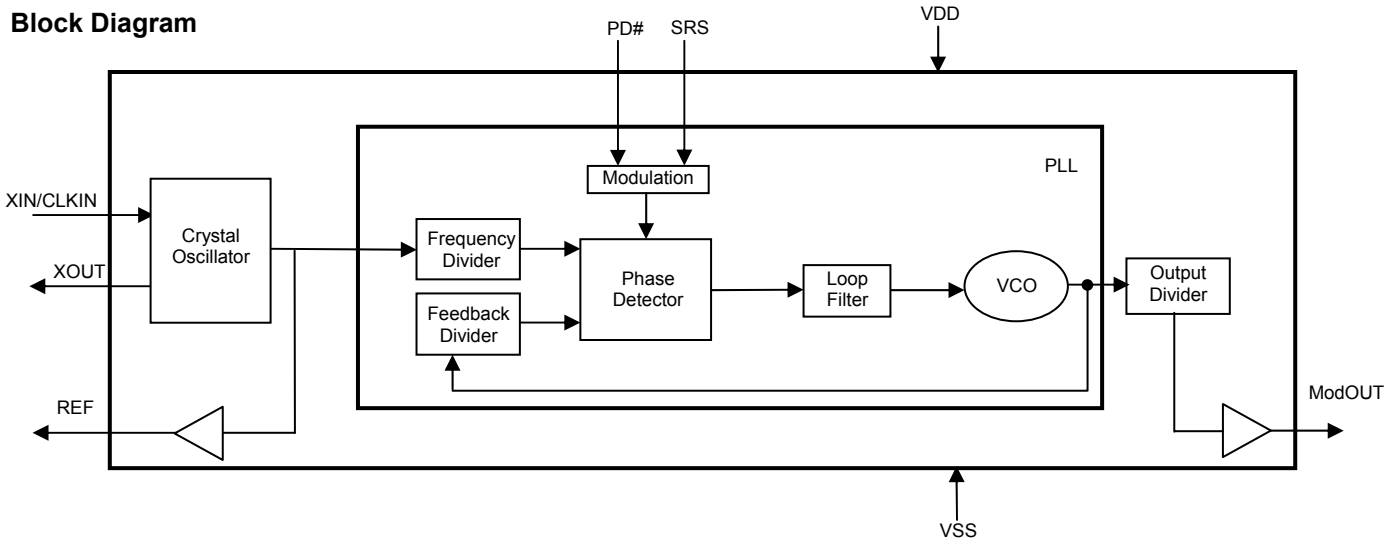

PulseCore Semiconductor Corporation
1715 S. Bascom Ave Suite 200, Campbell, CA 95008 • Tel: 408-879-9077 • Fax: 408-879-9018
www.pulsecoresemi.com

Notice: The information in this document is subject to change without notice.

Pin Configuration

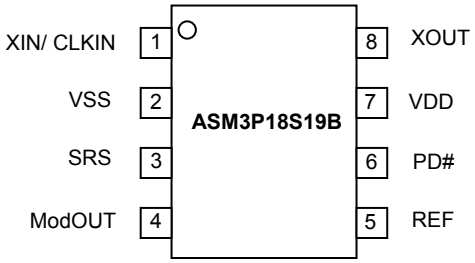

Pin Description

Pin#	Pin Name	Type	Description
1	XIN / CLKIN	I	Crystal Connection or external frequency input.This pin has dual functions. It can be connected to either an external crystal or an external reference clock
2	VSS	P	Ground Connection. Connect to system ground.
3	SRS	I	Spread range select. Digital logic input used to select frequency deviation *(Refer Spread Deviation Selection Table).* This pin has an internal pull-up resistor.
4	ModOUT	O	Spread spectrum clock output. *(Refer Input Frequency and Modulation Rate Table and Spread Deviation Selection Table)*
5	REF	O	Non-modulated Reference clock output of the input frequency.
6	PD#	I	Power down control pin. Pull LOW to enable Power-Down mode. This pin has an internal pull-up resistor.
7	VDD	P	Power Supply for the entire chip.
8	XOUT	O	Crystal Connection. Input connection for an external crystal. If using an external reference, this pin must be left unconnected.

Input Frequency and Modulation Rate

Part Number	Input Frequency Range	Output Frequency range	Modulation rate
ASM3P18S19B	20MHz to 40MHz	20MHz to 40MHz	Input Frequency / 512

Spread Deviation Selection

Part Number	SRS	Spread Deviation
ASM3P18S19B	0	-1.25% (DOWN)
	1	-1.75% (DOWN)

Notice: The information in this document is subject to change without notice.

Absolute Maximum Ratings

Symbol	Parameter	Rating	Unit
VDD, V_{IN}	Voltage on any pin with respect to Ground	-0.5 to +4.6	V
T_{STG}	Storage temperature	-65 to +125	°C
T_A	Operating temperature	0 to +70	°C
T_s	Max. Soldering Temperature (10 sec)	260	°C
T_J	Junction Temperature	150	°C
T_{DV}	Static Discharge Voltage (As per JEDEC STD22- A114-B)	2	KV

Note: These are stress ratings only and are not implied for functional use. Exposure to absolute maximum ratings for prolonged periods of time may affect device reliability.

DC Electrical Characteristics

(Test condition: All parameters are measured at room temperature (+25°C) unless otherwise stated)

Symbol	Parameter	Min	Typ	Max	Unit
V_{IL}	Input Low voltage	VSS - 0.3	-	0.8	V
V_{IH}	Input High voltage	2.0	-	VDD + 0.3	V
I_{IL}	Input Low current (inputs PD#, SRS)	-60.0	-	-20.0	µA
I_{IH}	Input High current	-	-	1.0	µA
I_{XOL}	X_{OUT} Output low current @ 0.4V, VDD = 3.3V	-	3	-	mA
I_{XOH}	X_{OUT} Output high current @ 2.5V, VDD = 3.3V	-	3	-	mA
V_{OL}	Output Low voltage VDD = 3.3V, I_{OL} = 20mA	-	-	0.4	V
V_{OH}	Output High voltage VDD = 3.3V, I_{OH} = 20mA	2.5	-	-	V
I_{CC}	Dynamic supply current normal mode 3.3V and 25pF probe loading	7.1 $f_{IN - min}$	-	26.9 $f_{IN - max}$	mA
I_{DD}	Static supply current standby mode	-	4.5	-	mA
VDD	Operating Voltage	-	3.3	-	V
t_{ON}	Power up time (first locked clock cycle after power up)	-	0.18	-	mS
Z_{OUT}	Clock Output impedance	-	50	-	Ω

AC Electrical Characteristics

Symbol	Parameter	Min	Typ	Max	Unit
f_{IN}	Input Frequency	20	-	40	MHz
f_{OUT}	Output Frequency	20	-	40	MHz
t_{LH}*	Output Rise time Measured from 0.8V to 2.0V	-	0.66	-	nS
t_{HL}*	Output Fall time Measured from 0.8V to 2.0V	-	0.65	-	nS
t_{JC}	Jitter (Cycle to cycle)	-200	-	200	pS
t_D	Output Duty cycle	45	50	55	%

*t_{LH} and t_{HL} are measured into a capacitive load of 15pF

Notice: The information in this document is subject to change without notice.

Package Information

8-lead (150-mil) SOIC Package

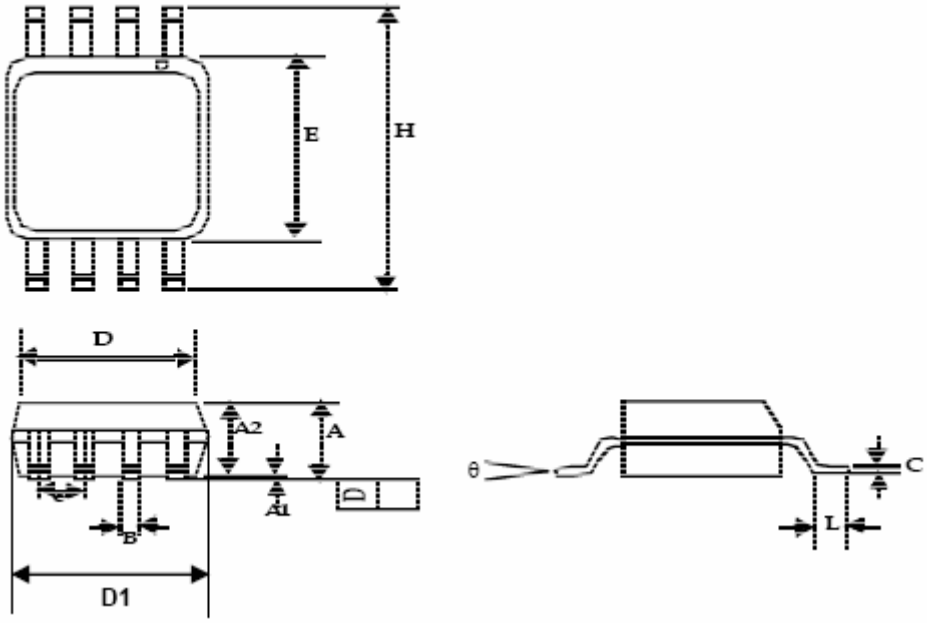

Symbol	Dimensions			
	Inches		Millimeters	
	Min	Max	Min	Max
A1	0.004	0.010	0.10	0.25
A	0.053	0.069	1.35	1.75
A2	0.049	0.059	1.25	1.50
B	0.012	0.020	0.31	0.51
C	0.007	0.010	0.18	0.25
D	0.193 BSC		4.90 BSC	
E	0.154 BSC		3.91 BSC	
e	0.050 BSC		1.27 BSC	
H	0.236 BSC		6.00 BSC	
L	0.016	0.050	0.41	1.27
θ	0°	8°	0°	8°

Package length (Excluding end flash)D - 188 ~ 193 mils.
Package length (Including end flash) D1 - 198 ~ 207 mils.

Notice: The information in this document is subject to change without notice.

8-lead TSSOP (4.40-MM Body)

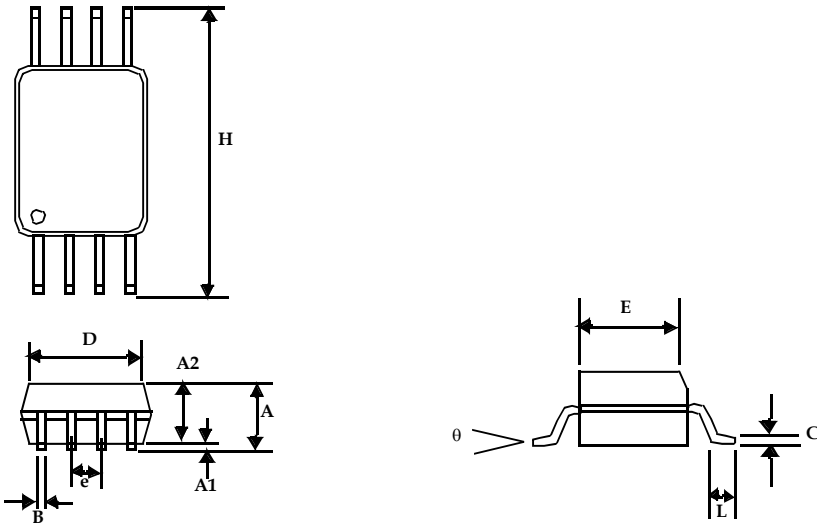

Symbol	Dimensions			
	Inches		Millimeters	
	Min	Max	Min	Max
A		0.043		1.10
A1	0.002	0.006	0.05	0.15
A2	0.033	0.037	0.85	0.95
B	0.008	0.012	0.19	0.30
C	0.004	0.008	0.09	0.20
D	0.114	0.122	2.90	3.10
E	0.169	0.177	4.30	4.50
e	0.026 BSC		0.65 BSC	
H	0.252 BSC		6.40 BSC	
L	0.020	0.028	0.50	0.70
θ	0°	8°	0°	8°

Note: Controlling dimensions are millimeters
TSSOP – 0.0325 grams unit weight

Notice: The information in this document is subject to change without notice.

Ordering Information

Part Number	Marking	Package Type	Temperature
ASM3P18S19BF-08TT	3P18S19BF	8-Pin TSSOP, TUBE, Pb Free	Commercial
ASM3P18S19BF-08TR	3P18S19BF	8-Pin TSSOP, TAPE & REEL , Pb Free	Commercial
ASM3P18S19BF-08ST	3P18S19BF	8-Pin SOIC, TUBE, Pb Free	Commercial
ASM3P18S19BF-08SR	3P18S19BF	8-Pin SOIC, TAPE & Pb Free	Commercial
ASM3P18S19BG-08TT	3P18S19BG	8-Pin TSSOP, TUBE, Green	Commercial
ASM3P18S19BG-08TR	3P18S19BG	8-Pin TSSOP, TAPE & REEL, Green	Commercial
ASM3P18S19BG-08ST	3P18S19BG	8-Pin SOIC, TUBE, Green	Commercial
ASM3P18S19BG-08SR	3P18S19BG	8-Pin SOIC, TAPE & REEL, Green	Commercial

Products are available for industrial temperature range operation. Please contact factory for more information.

Device Ordering Information

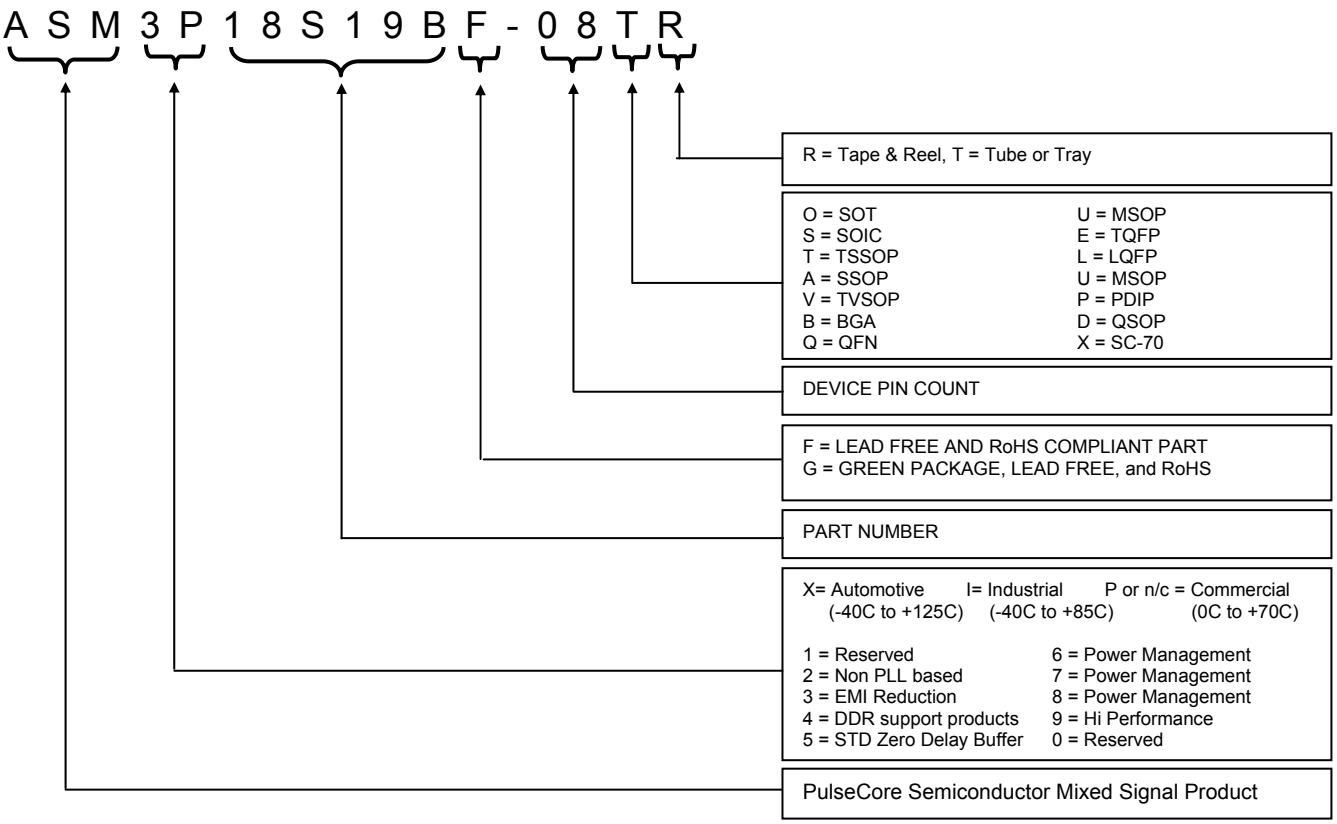

Licensed under US patent #5,488,627, #6,646,463 and #5,631,920.

Notice: The information in this document is subject to change without notice.

PulseCore Semiconductor Corporation
1715 S. Bascom Ave Suite 200
Campbell, CA 95008
Tel: 408-879-9077
Fax: 408-879-9018
www.pulsecoresemi.com

Copyright © PulseCOre Semiconductor
All Rights Reserved
Part Number: ASM3P18S19B
Document Version: 2.2

Note: This product utilizes US Patent # 6,646,463 Impedance Emulator Patent issued to PulseCore Semiconductor, dated 11-11-2003

© Copyright 2006 PulseCore Semiconductor Corporation. All rights reserved. Our logo and name are trademarks or registered trademarks of PulseCore Semiconductor. All other brand and product names may be the trademarks of their respective companies. PulseCore reserves the right to make changes to this document and its products at any time without notice. PulseCore assumes no responsibility for any errors that may appear in this document. The data contained herein represents PulseCore's best data and/or estimates at the time of issuance. PulseCore reserves the right to change or correct this data at any time, without notice. If the product described herein is under development, significant changes to these specifications are possible. The information in this product data sheet is intended to be general descriptive information for potential customers and users, and is not intended to operate as, or provide, any guarantee or warrantee to any user or customer. PulseCore does not assume any responsibility or liability arising out of the application or use of any product described herein, and disclaims any express or implied warranties related to the sale and/or use of PulseCore products including liability or warranties related to fitness for a particular purpose, merchantability, or infringement of any intellectual property rights, except as express agreed to in PulseCore's Terms and Conditions of Sale (which are available from PulseCore). All sales of PulseCore products are made exclusively according to PulseCore's Terms and Conditions of Sale. The purchase of products from PulseCore does not convey a license under any patent rights, copyrights; mask works rights, trademarks, or any other intellectual property rights of PulseCore or third parties. PulseCore does not authorize its products for use as critical components in life-supporting systems where a malfunction or failure may reasonably be expected to result in significant injury to the user, and the inclusion of PulseCore products in such life-supporting systems implies that the manufacturer assumes all risk of such use and agrees to indemnify PulseCore against all claims arising from such use.

Notice: The information in this document is subject to change without notice.