Rev	AWO #	Description	Date	Appr
-		RELEASED	9/15/10	

APPROVED: _____

DATE: _____ TITLE: _____

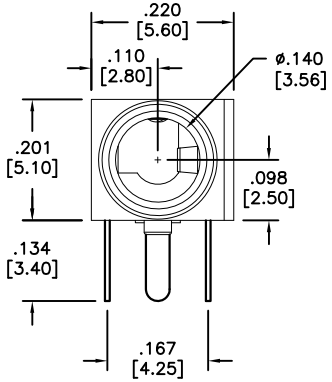

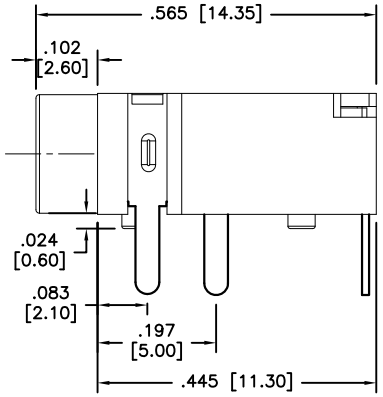

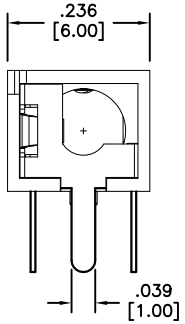

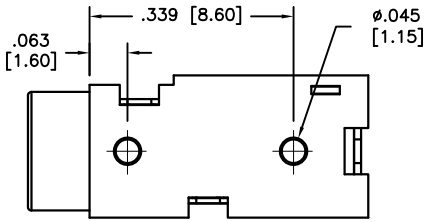

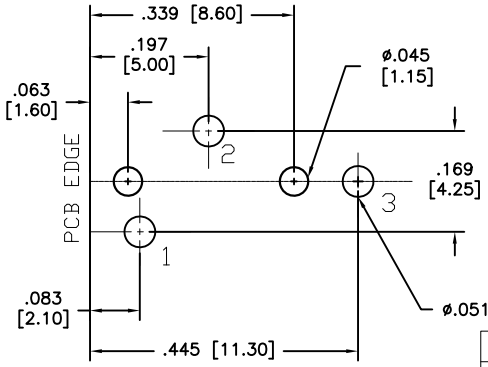

RECOMMENDED PCB LAYOUT

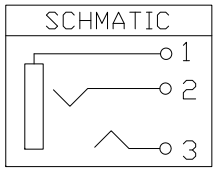

SPECIFICATIONS:
Material:
Insulator: PBT, rated UL 94V–0
Insulator color: Black
Contacts: Phosphor Bronze, Tin plated.
Electrical:
Operating voltage: 30 VDC max.
Rated Voltage And Current: DC 12V, 2A Max
AC 100V, 1A Max
Contact resistance: 30 mohms max.
Insulation resistance: 100 Mohms min.
Dielectric withstanding voltage: 500 VAC for 1 minute
Temperature Rating:
Operating temperature: –20°C to +70°C
Environmental:
Lead free, RoHS compliant.
Recommended soldering temp: 235°C for 5 sec.

RoHS COMPLIANT

UNLESS OTHERWISE SPECIFIED
ALL DIMENSIONS ARE INCHES [MM]
TOLERANCES: EXCEPT AS NOTED

INCHES		HOLES	
.X	± .10	Ø.X	±.10
.XX	± .020	Ø.XX	±.015
.XXX	± .015	Ø.XXX	±.010

APPROVALS		DATE
DRAWN	AY	9/15/10
CHECKED	VW	9/15/10
APPROVED		

ADAM TECH
909 Rahway Avenue, Union, NJ 07083
Phone: 908-687-5000 Fax: 908-687-5710

TITLE
STEREO PHONE JACK, 3.5mm

SIZE	PART NO.	REV.
X	ASJ-133-3	-

REF:	SCALE:	SHEET
S00140T	NTS	1 OF 1