MALLORY y Sonalert Products Inc.	Part # ASI401TRQ
Sales Outline Drawing	Revision **F**

May not be suitable for all medical and aerospace applications.

Specifications: Contact Mallory Sonalert to discuss your application.

Oscillation Frequency (Hz)	2400 ± 300
Operating Voltage (Vdc)	9.0 ~ 15
Rated Voltage (Vdc)	12
Current Consumption Max. (mA)	50 at Rated Voltage
Sound Pressure Level Min. (dB)	90 at 10cm at Rated Voltage
Tone/Pulse Rate	Constant
Operating Temperature (°C)	-40 ~ +80
Storage Temperature (°C)	-40 ~ +80
Housing	PPS plastic resin (Color: Gray)
Type of Connection	SMD
Weight (Grams)	3.0
Condition by reflow soldering (°C)	250 ±5 / within 5 sec
Condition by hand soldering (°C)	350 ±20 / within 5 sec
Options	For other options contact factory

Dimensions: (units: mm)

ROHS Compliant

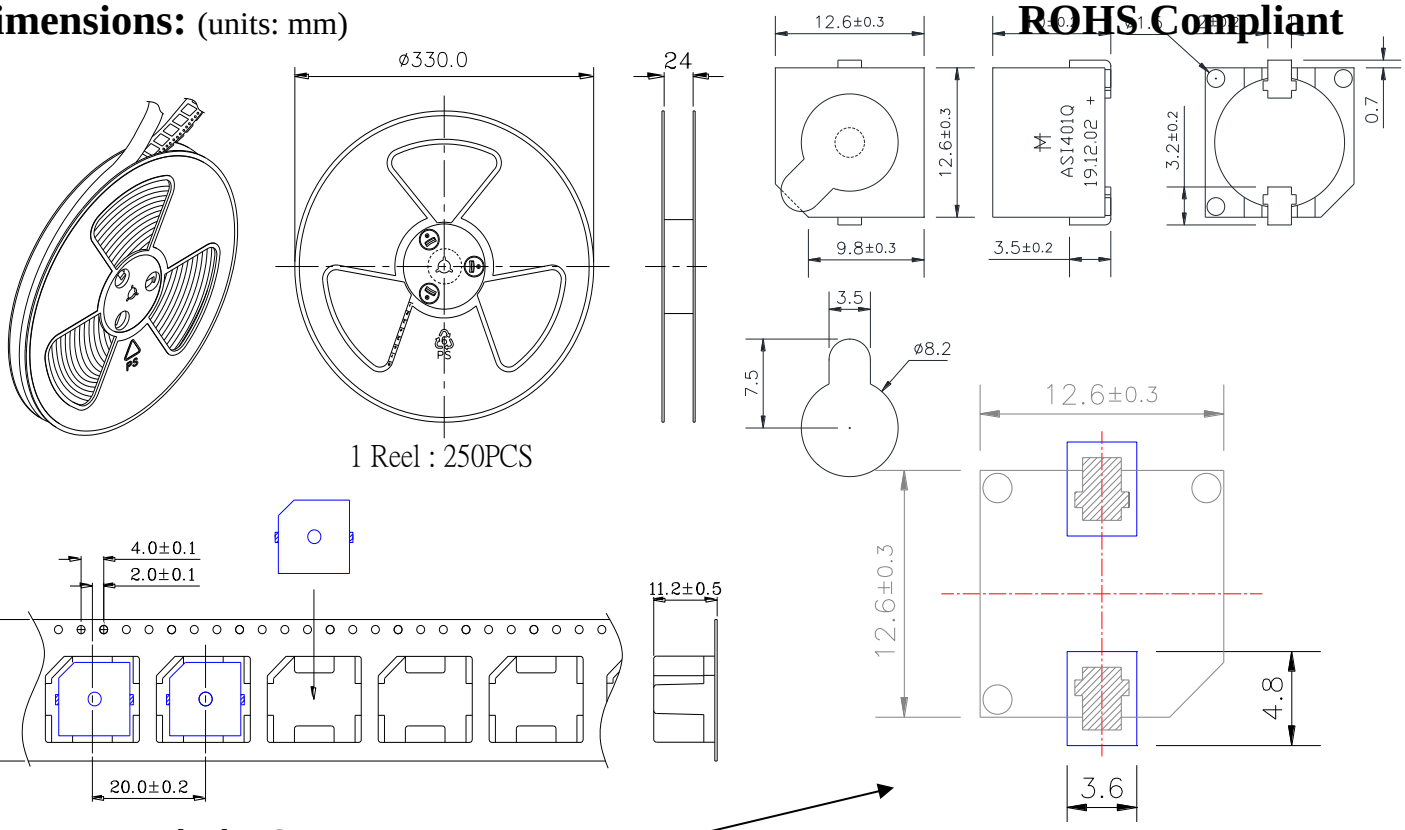

Recommended PCB Layout:

Packaging:

Parts are supplied on reels (250 pcs per tape and reel).
Parts come with wash label and are suitable for aqueous wash.