CMOS/TTL SMD PROGRAMMABLE CRYSTAL OSCILLATOR

ASEP SERIES



3.2 X 2.5 X 1.05 mm

Pb RoHS Compliant

FEATURES:

- Wide frequency range from 1MHz up to 125MHz
- Miniature size for high density applications
- -40 + 85C industrial operating temperature available

APPLICATIONS:

- Precision clock frequency for a wide range of emerging technology applications.

For Small Quantities, Delivery Time is 1-5 days

STANDARD SPECIFICATIONS:

PARAMETERS

ABRACON P/N		ASEP Series			
Characteristics		**Unit**	**Minimum**	**Typical**	**Maximum**
Frequency Range		MHz	1	--	125
Operating Temp. Range * (See Options)		°C	-20	--	70
Storage Temp. Range * (See Options)		°C	-55	--	125
Freq. Stability Over Operating Temp.* (See Options)		ppm	-100	--	100
Supply Voltage (See options)	**ASEP3**	VDC	2.97	3.3	3.63
	ASEP5	VDC	4.5	5.0	5.5
Supply Current	**ASEP3**	mA	--	--	25
	ASEP5	mA	--	--	45
Disable Current (See options)	**ASEP3**	mA	--	--	15
	ASEP5	mA	--	--	30
Stand-by Current (See options)		uA	--	--	50
Output Load	**CMOS**		15pF (ASEP3 and ASEP5)		
	TTL		5TTL max. (ASEP5 only)		
Symmetry	**CMOS (1/2Vdd)**	%	40	50	60
	TTL (1.4V)	%	40	50	60
Rise Time	**CMOS (20%Vdd<=>80%Vdd)**	nSec	--	--	4
	TTL(0.4V<=>2.4V)	nSec	--	--	4
Fall Time	**CMOS (20%Vdd<=>80%Vdd)**	nSec	--	--	4
	TTL (0.4V<=>2.4V)	nSec	--	--	4
Output Voltage	**CMOS**	VOH	--	--	0.9*Vdd min.
		VOL	0.1*Vdd max.	--	--
	TTL	VOH	--	--	0.9*Vdd min.
		VOL	0.4*Vdd max.	--	--
Input (OE) Voltage	**ASEP3** (CMOS)	VIH	--	--	0.7*Vdd min.
		VIL	0.2*Vdd max.	--	--
	ASEP5 (CMOS and TTL)	VIH	--	--	2.0V min.
		VIL	0.8V max.	--	--
Start-Up time		ms	--	--	10
Output Disable Time		ns	--	--	100
Output Enable Time (OE)		ns	--	--	100
Output Enable Time (ST)		ms	--	--	10
Aging (First Year)		ppm	-5	--	5

OPTIONS & PART IDENTIFICATION:

(Left blank if standard)

ASEP□-Frequency- □ - □ - □ - □

Supply Voltage	
3	3.3V±10%
5	5.0V±10%

Temp. Range	
D	-10°C to +60°C
F	-30°C to +70°C
N	-30°C to +85°C
L	-40°C to +85°C

Packaging	
Blank	Bulk
T	Tape and Reel

Frequency
XX.XXXXMHz

Frequency Stability Over Operating Temp.	
C	± 50 ppm

Please contact ABRACON for tighter stability

OE or Stand-By	
Blank	Output Enable
B	Stand-By

30332 Esperanza, Rancho Santa Margarita, California 92688
tel 949-546-8000 | fax 949-546-8001 | www.abracon.com

CMOS/TTL SMD PROGRAMMABLE CRYSTAL OSCILLATOR

ASEP SERIES



3.2 X 2.5 X 1.05 mm

Pb RoHS Compliant

OUTLINE DRAWING:

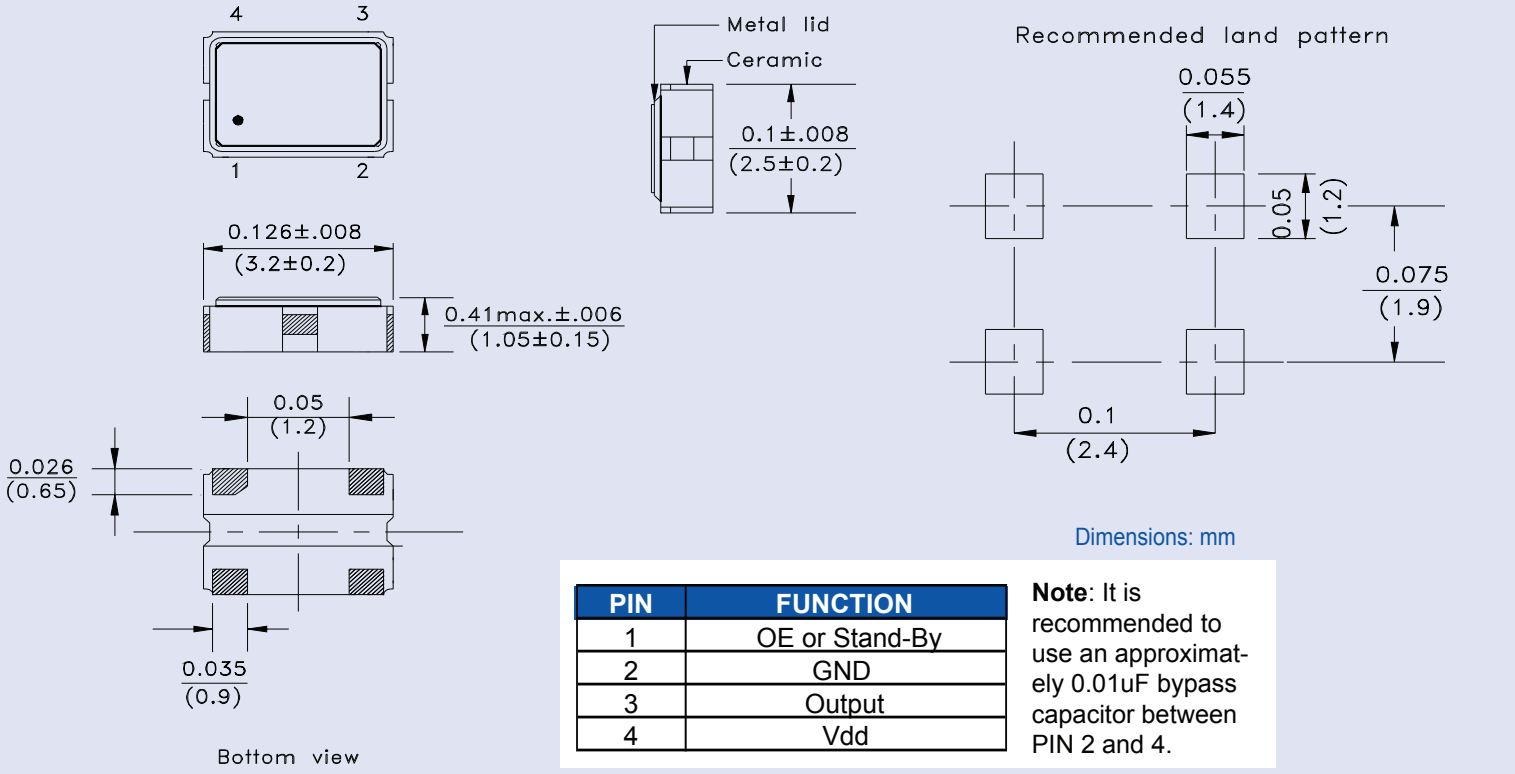

Dimensions: mm

PIN	FUNCTION
1	OE or Stand-By
2	GND
3	Output
4	Vdd

Note: It is recommended to use an approximately 0.01uF bypass capacitor between PIN 2 and 4.

TAPE & REEL:

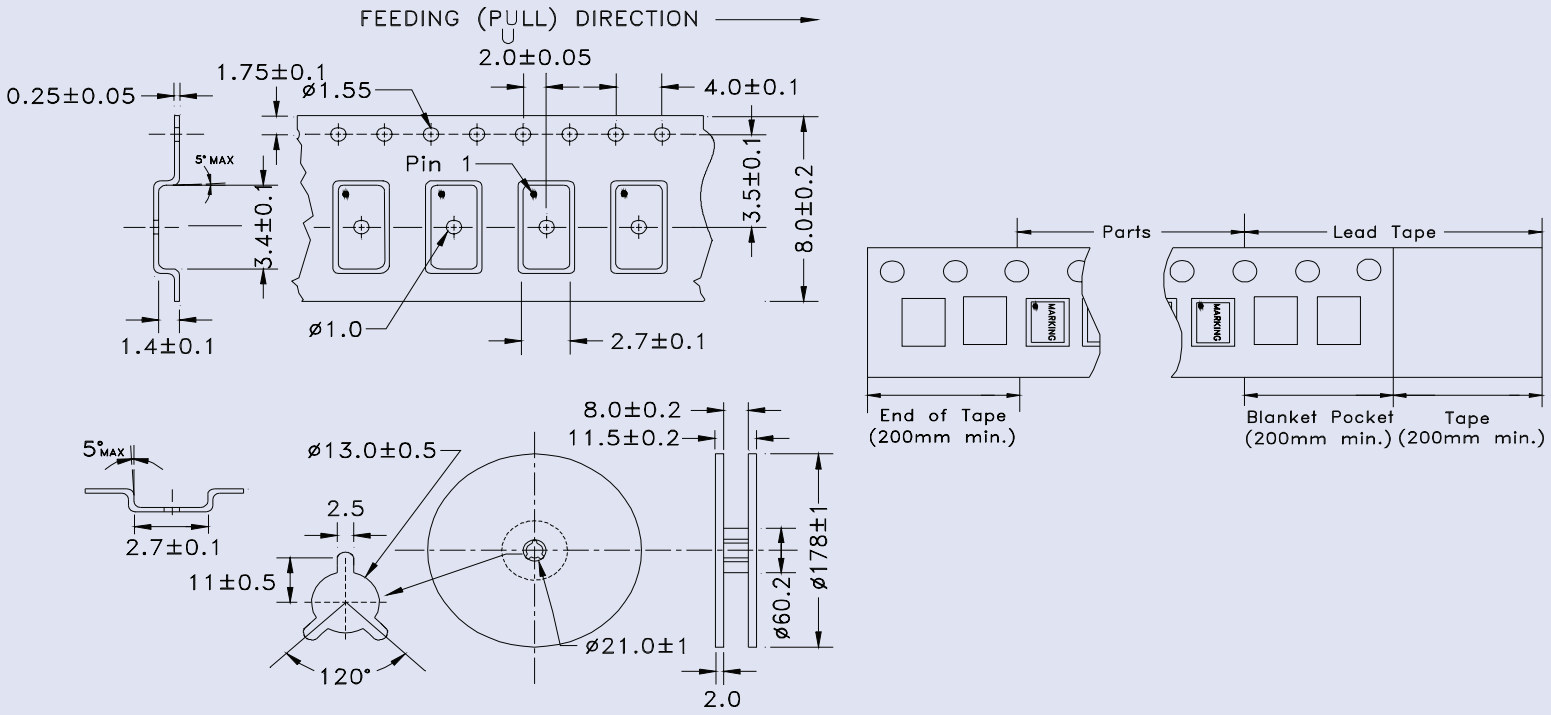

Dimensions: mm

30332 Esperanza, Rancho Santa Margarita, California 92688
tel 949-546-8000 | fax 949-546-8001 | www.abracon.com