Plastic Package Industrial Grade Ultra Miniature Pure Silicon™ Clockoscillators, Layout Compatible To 1.6 X 1.2 Mm Standard Oscillator

1.8 x 1.25 x 0.68mm
Layout Compatible to 1.6 x 1.2 mm
Standard Oscillator

ASCSM

Moisture Sensitivity Level – MSL 1

RoHS/RoHS II

EOL/Obsolescence planned – Not Recommended for New Designs

FEATURES:

- Ultra Miniature Pure SiliconTM Clock Oscillator, Layout Compatible to 1.6 x 1.2 mm Footprint
- High Performance MEMS Technology by Discera
- Low Power Consumption for high speed communication
- Exceptional Stability Over Temp. at -40 to +105°C, ±10ppm
- Available in 30kG Shock Resistance Configuration upon request
- MIL-STD-883 shock and vibration compliant
- Ball Grid Array Packaging
- Low jitter (Period jitter RMS and Phase jitter RMS)

APPLICATIONS:

- Imaging, Video, and Audio Modules
- Portable Consumer Electronics and Media Devices
- Tablets and Mobile Internet Devices
- Low Profile Embedded Designs
- Pico and Femto Networking

STANDARD SPECIFICATIONS:

Common Key Electrical Specifications

Parameters	Minimum	Typical	Maximum	Units	Notes
Frequency Range:	1.0		150	MHz	
Operating Temperature:	0		+70	°C	See options
Storage Temperature:	-55		+150	°C	
Overall Frequency Stability:	-50		+50	ppm	See options
Supply Voltage (Vdd):		+1.7 ~ +3.6		V	
Output Load:			15	pF	
	10			kΩ	
Symmetry:	45		55	%	@1/2Vdd
Startup Time:		1.0	1.3	ms	
Disable Time:		20	100	ns	
Disable Stand-by Current:			15	uA	
Tri-state Function (Stand-by) :	"1" (VIH≥0.75*Vdd) or Open: Oscillation "0" (VIL<0.25*Vdd) : Hi Z			V	
Aging:	-5.0		+5.0	ppm	First year

Key Electrical Specifications

Parameters		Minimum	Typical	Maximum	Units	Notes
Supply Current (no load):	12 MHz		6.0	6.5	mA	CL=0p ; V=1.8V RL=∞; T=25°C (Standard CL: 15pF)
Output Voltage:	V_{OH}	$0.8*V_{dd}$			V	CL=15pF
	V_{OL}			$0.2*V_{dd}$	V	
Rise Time:	Tr		1.8	3.0	ns	CL=15pF; T=25°C 20%/80%*VDD
Fall Time:	Tf		1.0	3.0	ns	
Period Jitter RMS	Jrms		7.0		ps	F=12MHz CL=15pF

Absolute Maximum Ratings

Item	Minimum	Maximum	Unit	Condition
Input Voltage	-0.3	V_{DD}+0.3	V	
Junction Temp.		+150	°C	
Storage Temp.	-55	+150	°C	
Soldering Temp.		+260	°C	40sec max
ESD			V	
HBM		4,000		
MM		200		
CDM		1,500		

30332 Esperanza, Rancho Santa Margarita, California 92688
tel 949-546-8000 | fax 949-546-8001 | www.abracon.com

Plastic Package Industrial Grade Ultra Miniature Pure Silicon™ Clockoscillators, Layout Compatible To 1.6 X 1.2 Mm Standard Oscillator

1.8 x 1.25 x 0.68mm
Layout Compatible to 1.6 x 1.2 mm
Standard Oscillator

ASCSM

RoHS/RoHS II

EOL/Obsolescence planned – Not Recommended for New Designs

PART IDENTIFICATION:

ASCSM - ☐ MHz - ☐☐ - ☐

Frequency in MHz
e.g. 14.3181 MHz (Maximum 4 digits after decimal)

Operating Temp.
Blank: 0°C ~ +70°C
E: -20°C ~ +70°C
L: -40°C ~ +85°C
X: -40°C ~ +105°C

Overall Freq. Stability
C: ±50ppm (STD)
Y: ±10ppm
R: ±25 ppm

Packaging
Blank: Bulk
T: 2,500pcs/reel
T5: 5,000pcs / reel

OUTLINE DRAWING:

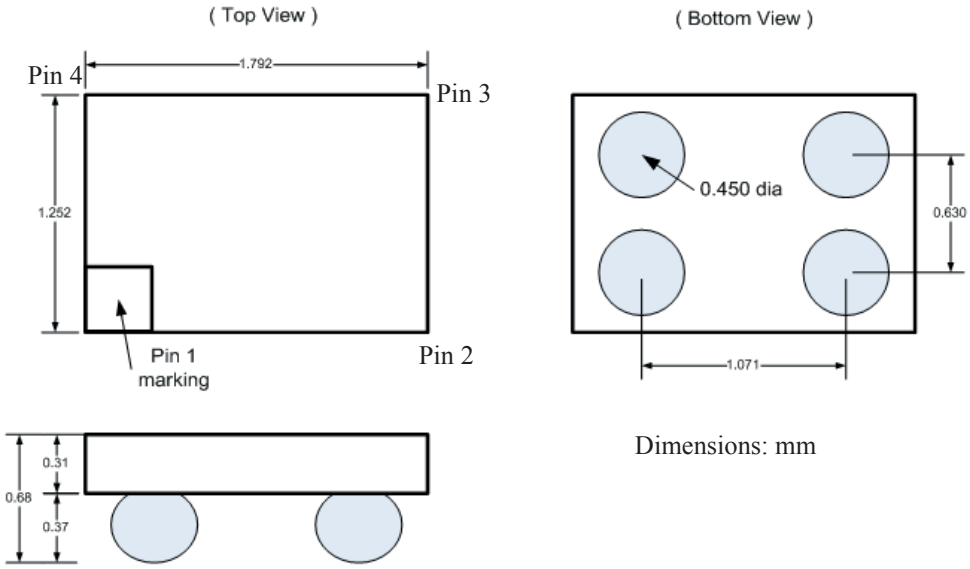

Dimensions: mm

Component height after reflow is 0.53-0.60 mm. Layout Compatible to 1.6 x 1.2 mm Standard Oscillator

Pin	Function
1	Standby
2	GND
3	Output
4	Vdd

Note: Recommend using an approximately 0.01uF bypass capacitor between PIN 2 and 4.

Recommended Land Pattern

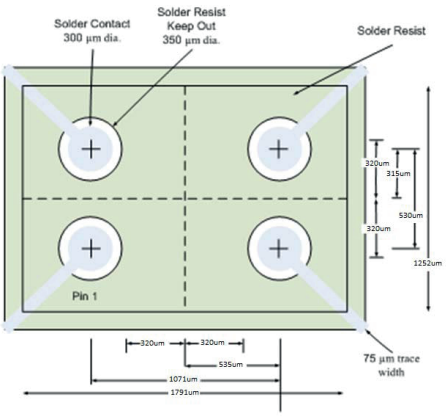

Plastic Package Industrial Grade Ultra Miniature Pure Silicon™ Clockoscillators, Layout Compatible To 1.6 X 1.2 Mm Standard Oscillator

1.8 x 1.25 x 0.68mm
Layout Compatible to 1.6 x 1.2 mm
Standard Oscillator

ASCSM

RoHS/RoHS II

EOL/Obsolescence planned – Not Recommended for New Designs

REFLOW PROFILE:

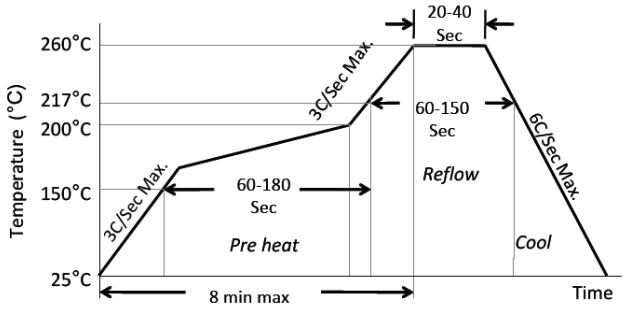

TAPE & REEL:

T= 2,500pcs/reel
T5= 5,000pcs/reel
Reel Size: Ø13 inches

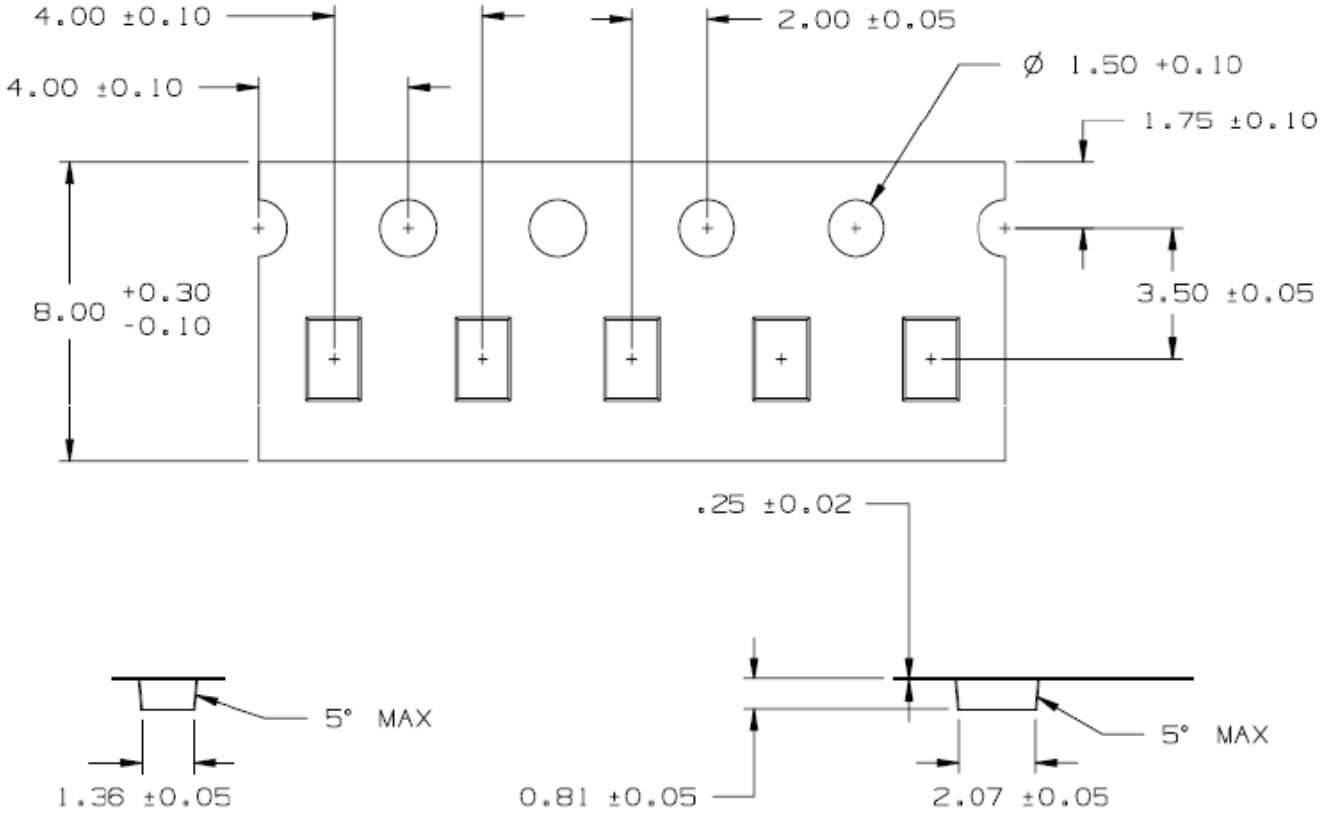

ATTENTION: Abracon Corporation's products are COTS – Commercial-Off-The-Shelf products; suitable for Commercial, Industrial and, where designated, Automotive Applications. Abracon's products are not specifically designed for Military, Aviation, Aerospace, Life-dependant Medical applications or any application requiring high reliability where component failure could result in loss of life and/or property. For applications requiring high reliability and/or presenting an extreme operating environment, written consent and authorization from Abracon Corporation is required. Please contact Abracon Corporation for more information.

30332 Esperanza, Rancho Santa Margarita, California 92688
tel 949-546-8000 | fax 949-546-8001 | www.abracon.com