# AS5050A

## Low Power 10-Bit Magnetic Position Sensor

## General Description

The AS5050A is a single-chip on-axis magnetic rotary position sensor with low voltage and low power features.

It includes an integrated Hall element array, a high resolution ADC and a smart power management controller.

The angle position, alarm bits and magnetic field information are transmitted over a 3-wire or 4-wire SPI interface to the microcontroller.

The AS5050A is available in a compact QFN 16-pin 4x4x0.85 mm package and specified over an operating temperature of -40°C to 85°C.

*Ordering Information and Content Guide appear at end of datasheet.*

## Key Benefits & Features

The benefits and features of AS5050A, Low Power 10-Bit Magnetic Position Sensor are listed below:

**Figure 1:**
**Added Value of Using AS5050A**

| Benefits | Features |
|---|---|
| Precise and reliable absolute angle measurement | 10-Bit absolute angle position indication |
| Very low power consumption | 3µA current consumption in low power mode |
| High reliability sensing | Immune to external magnetic stray fields |
| Synchronization between microcontroller and sensor | Interrupt pin displays availability of new data |
| Ideal for small and compact designs | QFN-16 4x4 package |
| Industry-standard interface | 3- or 4-wire SPI interface |

## Applications

This sensor is optimized for a broad range of demanding applications including:

- Servo motor control
- Battery operated systems
- Robotics

## Block Diagram

The functional blocks of this sensor are shown below:

**Figure 2:**
**AS5050A Block Diagram**

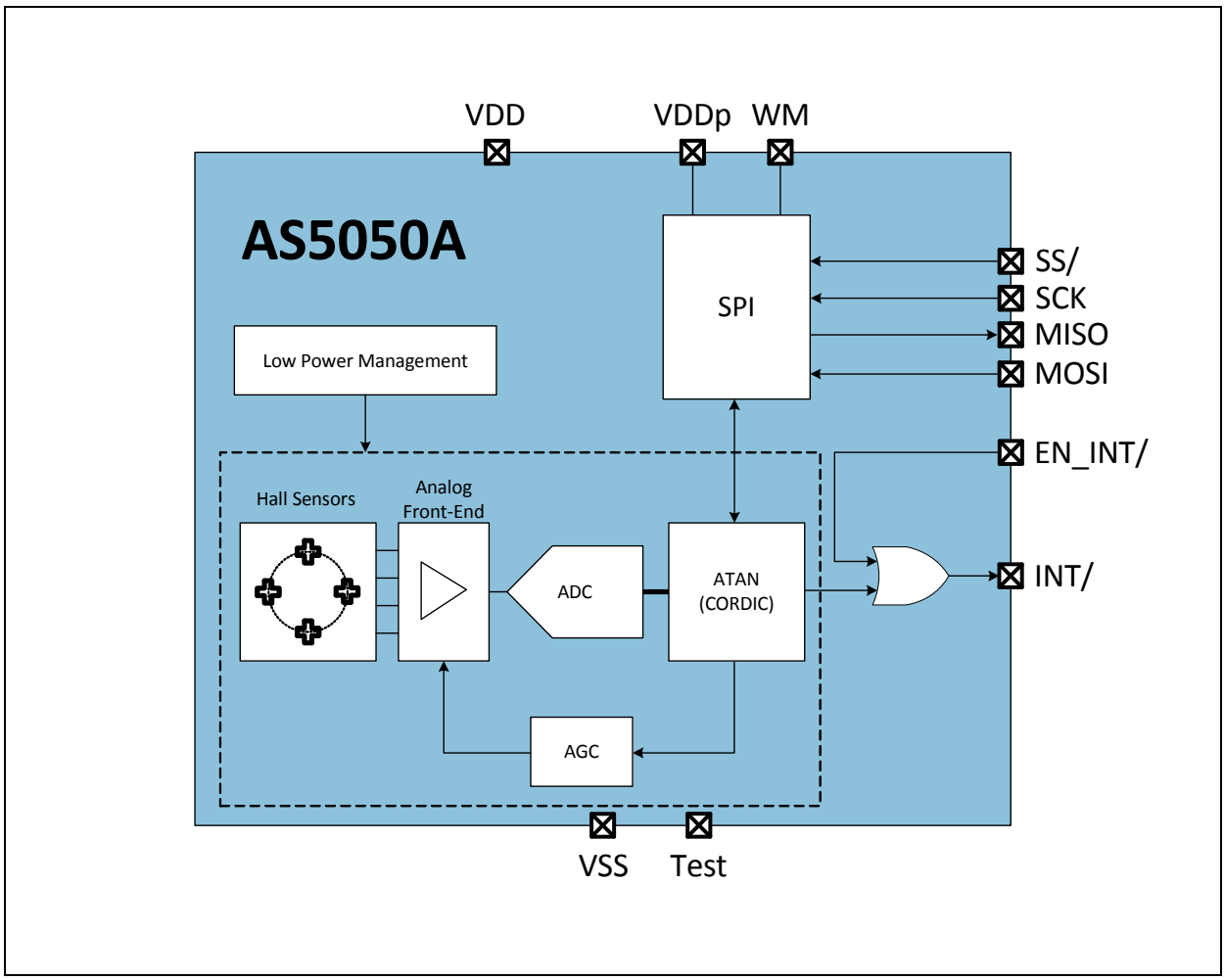

## Pin Assignment

The AS5050A pin assignments are shown below.

**Figure 3:**
**Pin Diagram**

**Pin Assignments (Top View):**
Package drawing is not to scale.

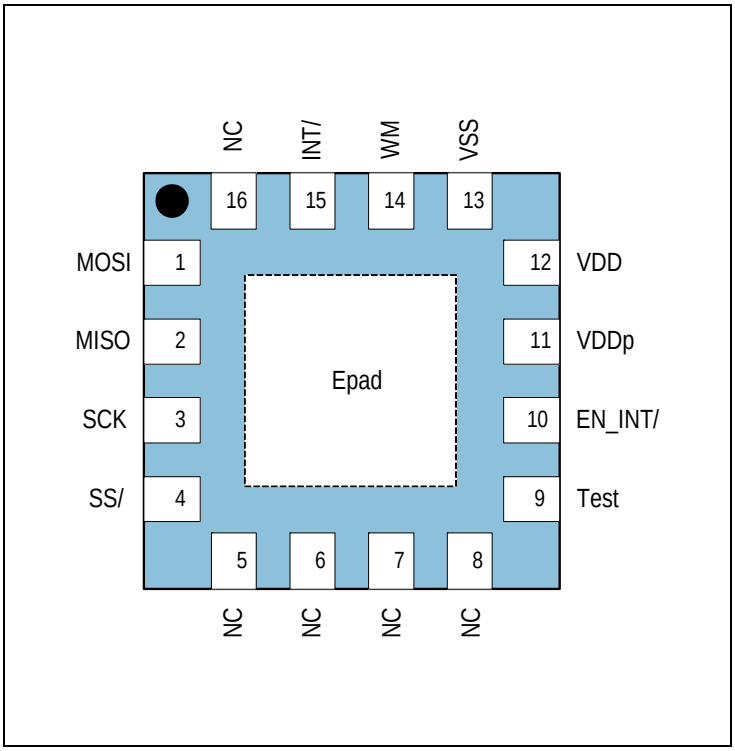


**Figure 4:**
**Pin Description**

| Pin Number | Name | Type | Description |
|---|---|---|---|
| 1 | MOSI | Digital input | SPI bus data input |
| 2 | MISO | Digital output, tri-state buffer | SPI bus data output |
| 3 | SCK | Digital input Schmitt trigger | SPI clock |
| 4 | SS/ | Digital input | SPI Slave Select, active low |
| 5 | NC | - | Leave unconnected |
| 6 | NC | | |
| 7 | NC | | |
| 8 | NC | | |
| 9 | Test | Analog | Test pin, connect to VSS |
| 10 | EN_INT/ | Digital input | Enable interrupt, active low |

| Pin Number | Name | Type | Description |
|---|---|---|---|
| 11 | VDDp | Supply | Peripheral power supply, 1.8V to VDD |
| 12 | VDD | | Analog and digital power supply, 3.0V to 3.6V |
| 13 | VSS | | Ground |
| 14 | WM | Digital I/O | **Low:** 3-wire mode<br>**High:** 4-wire mode |
| 15 | INT/ | Digital output, tri-state buffer | Interrupt output. Active LOW, when conversion is finished |
| 16 | NC | - | Leave unconnected |
| Epad | - | - | Exposed pad, leave unconnected |

## Absolute Maximum Ratings

Stresses beyond those listed in "Absolute Maximum Ratings" on page 5 may cause permanent damage to the device. These are stress ratings only, and functional operation of the device at these or any other conditions beyond those indicated in "Electrical Characteristics" on page 6 is not implied. Exposure to absolute maximum rating conditions for periods may affect device reliability.

**Figure 5:**
**Absolute Maximum Ratings**

| Symbol | Parameter | Min | Max | Units | Comments |
|---|---|---|---|---|---|
| **Electrical Parameters** | | | | | |
| VDD | DC supply voltage | -0.3 | 5.0 | V | |
| VDDp | Peripheral supply voltage | -0.3 | VDD+0.3 | V | |
| $V_{IN}$ | Input pin voltage | -0.3 | 5.0 | V | |
| $I_{scr}$ | Input current (latchup immunity) | -100 | 100 | mA | Norm: JEDEC 78 |
| **Electrostatic Discharge** | | | | | |
| ESD | Electrostatic discharge | ±1 | - | kV | Norm: MIL-STD-883 E method 3015 |
| **Continuous Power Dissipation** | | | | | |
| $\Theta_{JA}$ | Package thermal resistance | - | 33.5 | °C/W | Velocity=0, Multi Layer PCB; JEDEC Standard Testboard |
| $P_t$ | Total power dissipation | | 36 | mW | |
| **Temperature Ranges and Storage Conditions** | | | | | |
| $T_{strg}$ | Storage temperature | -55 | 125 | °C | |
| $T_{BODY}$ | Package body temperature | | 260 | °C | The reflow peak soldering temperature (body temperature) specified is in accordance with *IPC/JEDEC J-STD-020 "Moisture/Reflow Sensitivity Classification for Non-Hermetic Solid State Surface Mount Devices".* The lead finish for Pb-free leaded packages is matte tin (100% Sn). |
| | Humidity non-condensing | 5 | 85 | % | |
| MSL | Moisture Sensitive Level | 3 | | | Represents a maximum floor life time of 168h |

# Electrical Characteristics

## Operating Conditions

**Figure 6:**
**Operating Conditions**

| Symbol | Parameter | Conditions | Min | Max | Units |
|---|---|---|---|---|---|
| VDD | DC supply voltage | | 3.0 | 3.6 | V |
| VDDp | Peripheral supply voltage | | 1.8 | VDD | V |
| $V_{IN}$ | Input pin voltage | | -0.3 | VDDp +0.3 | V |
| $T_{amb}$ | Ambient operating temperature | | -40 | 85 | °C |
| | External components | Power supply filter, pin VDD (see "Power Supply Filter" on page 10) | 2.2 | 4.7 | µF |
| | | | 15 | 33 | Ω |
| | | Ceramic capacitor, pin VDDp to VSS | 100 | | nF |

## System Parameters

**Figure 7:**
**System Parameters**

| Symbol | Parameter | Conditions | Min | Typ | Max | Units |
|---|---|---|---|---|---|---|
| $I_{ON}$ | Current consumption | Normal operating mode | | | 8.5 | mA |
| $I_{OFF}$ | Current consumption | Low power mode with activated POR (POR_OFF = 0x00) – default setting | | | 33 | µA |
| | | Low power mode with deactivated POR (POR_OFF = 0x5A) | | | 3 | µA |
| $t_{readout}$ | Readout rate | Time between READ ANGLE command and INTERRUPT | | | 500 | µs |
| $t_{PwrUp}$ | Power up time | Minimum time after power up before the sensor is operational | | | 580 | µs |
| $R_d$ | Lateral displacement range | Misalignment of the center of the magnet to the center of the die | | | ±0.5 | mm |
| $B_Z$ | Magnetic input field | | 30 | | 90 | mT |
| $B_{Z00}$ | Magnetic input field range | Gain = 00 | 58 | | 90 | mT |

| Symbol | Parameter | Conditions | Min | Typ | Max | Units |
|---|---|---|---|---|---|---|
| $B_{Z01}$ | Magnetic input field range | Gain = 01 | 51 | | 80 | mT |
| $B_{Z10}$ | Magnetic input field range | Gain = 10 | 39 | | 62 | mT |
| $B_{Z11}$ | Magnetic input field range | Gain = 11 | 30 | | 47 | mT |
| $N_{00}$ | Noise (rms) | Within $B_{z00}$ magnetic input field range and Gain = 00 | | | 0.128 | $deg_{rms}$ |
| $N_{01}$ | Noise (rms) | Within $B_{z01}$ magnetic input field range and Gain = 01 | | | 0.149 | $deg_{rms}$ |
| $N_{10}$ | Noise (rms) | Within $B_{z10}$ magnetic input field range and Gain = 10 | | | 0.192 | $deg_{rms}$ |
| $N_{11}$ | Noise (rms) | Within $B_{z11}$ magnetic input field range and Gain = 11 | | | 0.256 | $deg_{rms}$ |
| INL | Integral Non Linearity | Using Bomatec 6x2.5 mm NdFeB magnet with a maximum x/y-displacement radius of 250 µm from package center | -1.41 | | 1.41 | deg |
| $R_{PU/PD}$ | Recommended pull-up or pull-down resistor | Applicable for daisy chain configuration | 10k | | 50k | Ω |

## DC/AC Characteristics

Digital pads: MISO, MOSI, SCK, SS/, EN_INT/, INT/, WM

**Figure 8:**
**DC/AC Characteristics**

| Symbol | Parameter | Conditions | Min | Max | Units |
|---|---|---|---|---|---|
| $V_{IH}$ | High level input voltage | | 0.7 * VDDp | | V |
| $V_{IL}$ | Low level input voltage | VDDp > 2.7V | | 0.3 * VDDp | V |
| $V_{IL}$ | Low level input voltage | VDDp < 2.7V | | 0.25 * VDDp | V |
| $I_{LEAK}$ | Input leakage current | | | 1 | µA |
| $V_{OH}$ | High level output voltage | | VDDp - 0.5 | | V |
| $V_{OL}$ | Low level output voltage | | | VSS + 0.4 | V |
| $C_L$ | Capacitive load | | | 35 | pF |

# Detailed Description

## Noise Performance

This figure shows the Worst Case Noise Performance of the AS5050A at different gain settings which can be set in the System Configuration Register 1.

**Figure 9:**
**Worst Case Noise Performance of the AS5050A**

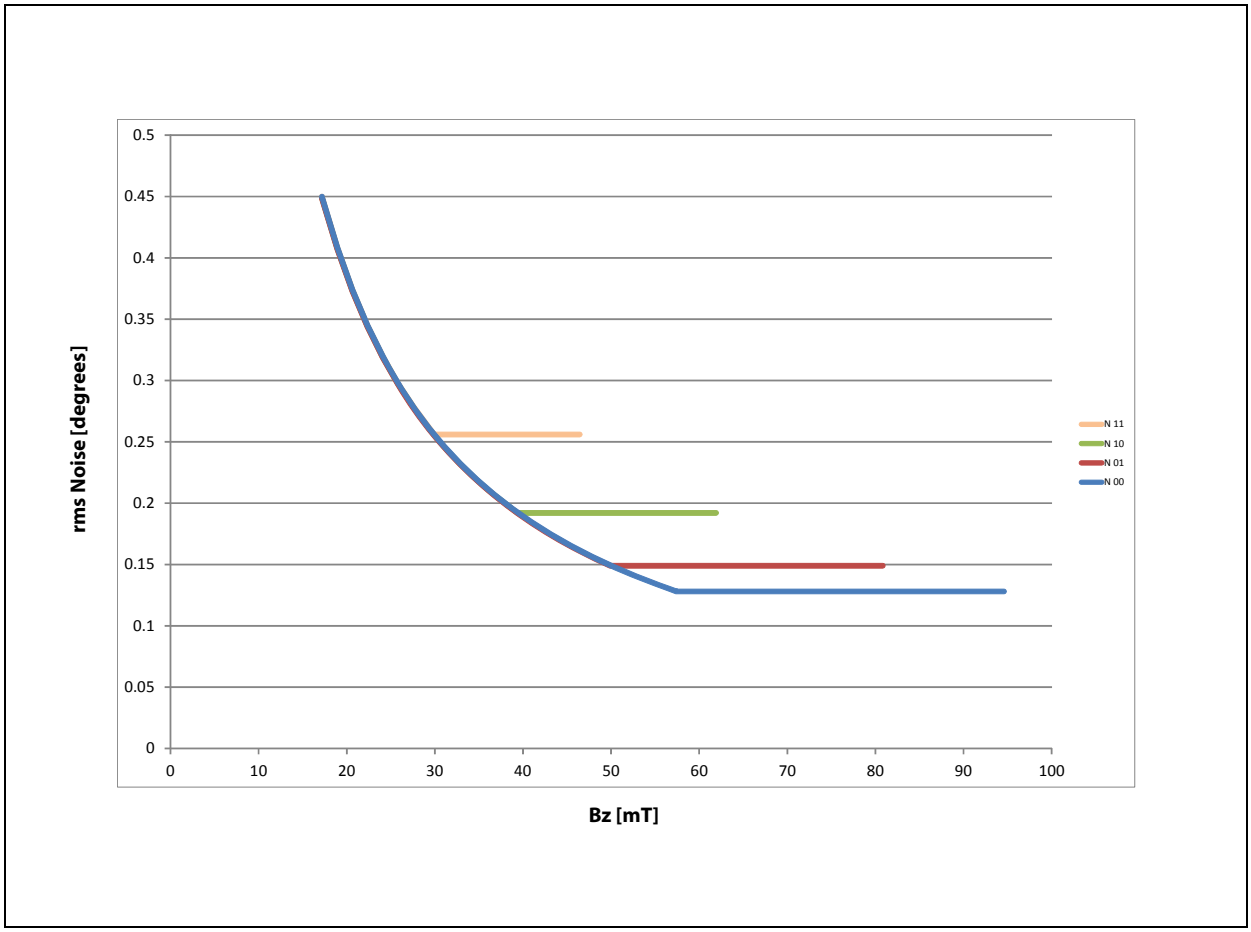

## Typical Application

The AS5050A uses on-chip Hall elements to convert the magnetic field component perpendicular to the surface of the chip into a voltage.

The signals from the Hall elements are amplified and filtered by the analog front-end (AFE) before being converted by the analog-to-digital converter (ADC). The output of the ADC is processed by the hardwired CORDIC (coordinate rotating digital computer) block to compute the angle and magnitude of the magnetic vector. The intensity of the magnetic field (magnitude) is used by the automatic gain control (AGC) to adjust the amplification level for compensation of temperature and magnetic field variations.

The internal 10-Bit resolution is available by reading a register through the SPI interface. The IC settings in the AS5050A can be programmed through the SPI interface without any dedicated programmer.

**Figure 10:**
**Typical Application Using SPI 4-Wire Mode and INT/ Output**

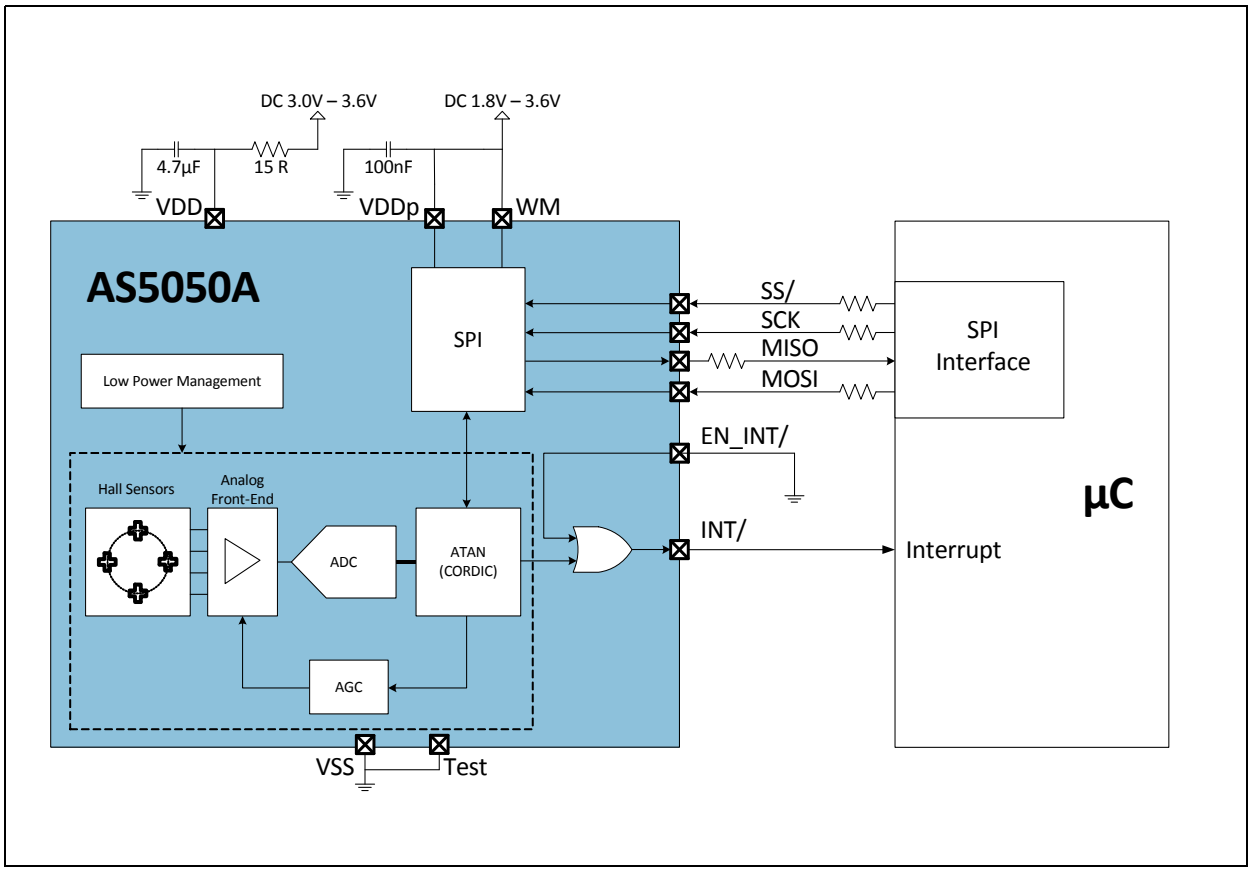


Figure 10 shows how the AS5050A can be connected to a microcontroller. The SPI interface is a slave interface for accessing the on-chip registers. The INT/ output is an active-low interrupt for informing the host microcontroller when a new result is available.

### Power Supply Filter

Due to the sequential internal sampling of the Hall sensors, fluctuations on the analog power supply (pin#12: VDD) may cause additional jitter of the measured angle. This jitter can be avoided by providing a stable VDD supply.

The easiest way to achieve that is to add a RC filter: 15Ω in series and 4.7µF to ground as shown in Figure 10.

Alternatively, a filter: 33Ω + 2.2µF may be used. However with this configuration, the minimum supply voltage is 3.15V.

### Reading an Angle

Sending a READ ANGLE command through the SPI interface automatically powers up the chip, drives INT/ high and starts another angle measurement. The completion of the angle measurement is indicated by driving the INT/ output low and clearing the WOW flag in the error status register. The microcontroller can respond to the interrupt by reading the angle value from the AS5050A over the SPI interface. (See Figure 11).

A READ ANGLE command must not be sent while a measurement is being performed as indicated by INT/ driven high or WOW = 1.

#### Reducing the Angle Jitter

The chip only performs a single angle measurement after a READ ANGLE command is received, after which it returns to low-power mode, so it is in normal operating mode for only a very short time ($t_{PwrUp}$).

The angle jitter can be reduced by averaging several angle measurements in the microcontroller. For example, an averaging of four samples reduces the jitter by 6dB (50%).

### Operating Modes

After a READ ANGLE command is sent, the angle is measured and internal calculations are started. During this time (normal operating mode) the INT/ output is high until the device finishes the calculations and a second READ ANGLE command may not be sent.

After the INT/ output is driven low the device goes into low-power mode. If the microcontroller doesn't monitor the INT/ output a minimum guard time ($t_{readout}$) must be inserted before the next READ ANGLE command can be sent.

After startup the AS5050A has higher power consumption than during low-power mode. When the POR cell is deactivated the chip uses less current during low-power mode (see POR OFF Register).

**Figure 11:**
**Operating Modes**

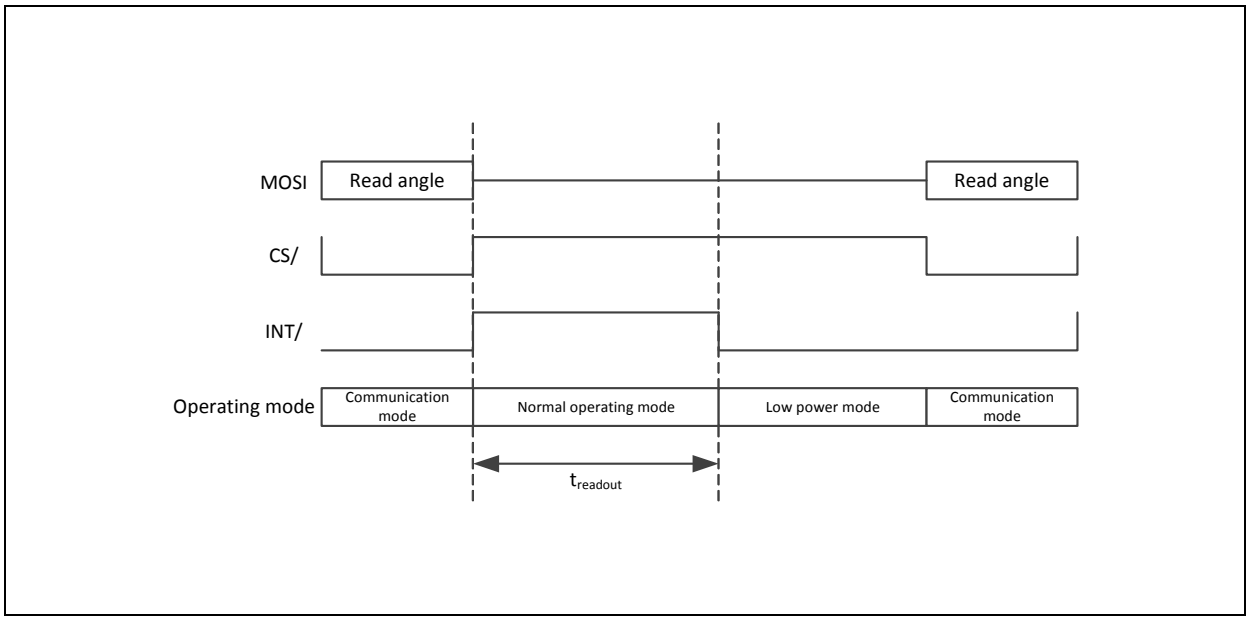


**Note(s) and/or Footnote(s):**

1. Even in low power mode, the power supply must be capable of supporting the active current ($I_{on}$) at least for maximum $t_{readout}$, until the AS5050A is suspended to low power mode.

### *Daisy Chain*

The AS5050A allows a Daisy Chain configuration as shown in Figure 21.

In this configuration the microcontroller can read multiple AS5050A chips using only 5 wires.

## SPI Interface

The 16-bit SPI interface provides read/write access to the on-chip registers. The interface only supports slave operation mode. It communicates at clock rates up to 10 MHz.

The AS5050A SPI uses mode=1 (CPOL=0, CPHA=1) to exchange data. As shown in Figure 12, a data transfer starts with the falling edge of CSn (SCL is low). The AS5050A samples the MOSI input on the falling edge of SCL. SPI commands are executed at the end of the frame (rising edge of CSn). The bit order is MSB first. Data is protected by parity.

### SPI Timing

**Figure 12:**
**SPI Timing Diagram**

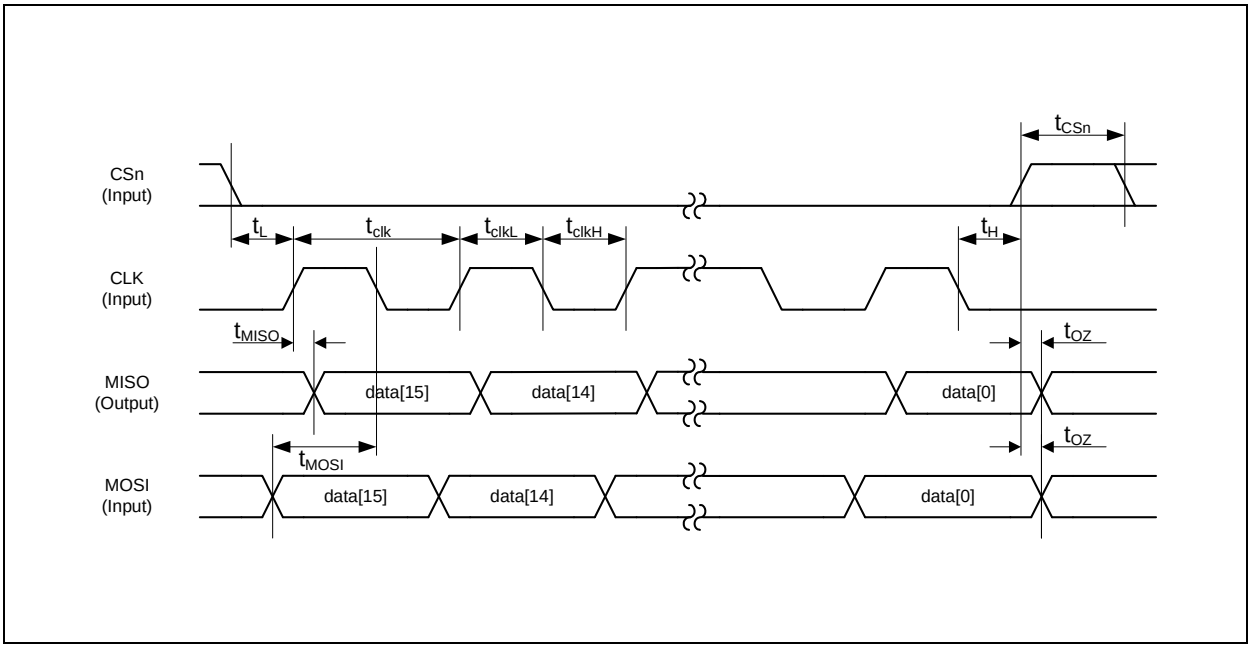

**Figure 13:**
**SPI Timing**

| Parameter | Description | Min | Max | Unit |
|---|---|---|---|---|
| $t_L$ | Time between CSn falling edge and CLK rising edge | 50 | | ns |
| $t_{clk}$ | Serial clock period | 100 | | ns |
| $t_{clkL}$ | Low period of serial clock | 50 | | ns |
| $t_{clkH}$ | High period of serial clock | 50 | | ns |
| $t_H$ | Time between last falling edge of CLK and rising edge of CSn | 50 | | ns |
| $t_{CSn}$ | High time of CSn between two transmissions (1) | 50 | | ns |
| $t_{MOSI}$ | Data input valid to falling clock edge | 20 | | ns |
| $t_{MISO}$ | CLK edge to data output valid | | 35 | ns |
| $t_{OZ}$ | Release bus time after CS rising edge. | | 50 | ns |

**Note(s) and/or Footnote(s):**

1. If the previous command was a READ ANGLE command (0x3FFF) a minimum time of readout has to be waited before sending a next READ ANGLE command. (see "Operating Modes" on page 10)

## SPI Wire Mode Selection

The SPI interface can be set in two different modes: 3-wire mode or 4-wire mode.

**Figure 14:**
**Wire Mode Selection**

| WM (Pin 14) | Connection option |
|---|---|
| 0 | 3-wire mode |
| 1 | 4-wire-mode |

## SPI Transaction

An SPI transaction consists of a 16-bit command frame followed by a 16-bit data frame. Figure 15 shows the structure of the command frame.

### *SPI Command Frame*

**Figure 15:**
**SPI Command Frame**

| Bit | 15 | 14 | 13 | 12 | 11 | 10 | 9 | 8 | 7 | 6 | 5 | 4 | 3 | 2 | 1 | 0 |
|---|---|---|---|---|---|---|---|---|---|---|---|---|---|---|---|---|
| | R/W | Address 14:1 | | | | | | | | | | | | | | PAR |

| Bit | Name | Description |
|---|---|---|
| 15 | R/W | 0=Write, 1=Read |
| 14:1 | Address | 14 bit address to read or write |
| 0 | PAR | Parity bit (even) calculated on the upper 15 bits |

To increase the reliability of communication over the SPI, an even parity bit (PAR) must be generated and sent. A wrong setting of the parity bit causes the PARITY bit in the error status register of the AS5050A to be set. The parity bit is calculated from the upper 15-bits of the command frame. The 16-bit command specifies the address and whether the transaction is a read or a write.

### *SPI Read Data Frame*

**Figure 16:**
**SPI Read Data Frame**

| Bit | 15 | 14 | 13 | 12 | 11 | 10 | 9 | 8 | 7 | 6 | 5 | 4 | 3 | 2 | 1 | 0 |
|---|---|---|---|---|---|---|---|---|---|---|---|---|---|---|---|---|
| | Data 15:2 | | | | | | | | | | | | | | EF | PAR |

| Bit | Name | Description |
|---|---|---|
| 15:2 | Data | 14 bit read data |
| 1 | EF | 0 = no command frame error occurred, 1 = error occurred |
| 0 | PAR | Parity bit (even) calculated on the upper 15 bits |

The data is sent from the AS5050A to the microcontroller on the MISO output. The parity bit PAR is calculated for the upper 15 bits. If an error is detected in the previous SPI command frame, the EF bit is set. The addressed register is sampled on the rising edge of CSn and the data is transmitted on MISO with the next read command, as shown in Figure 17.

**Figure 17:**
**SPI Read**

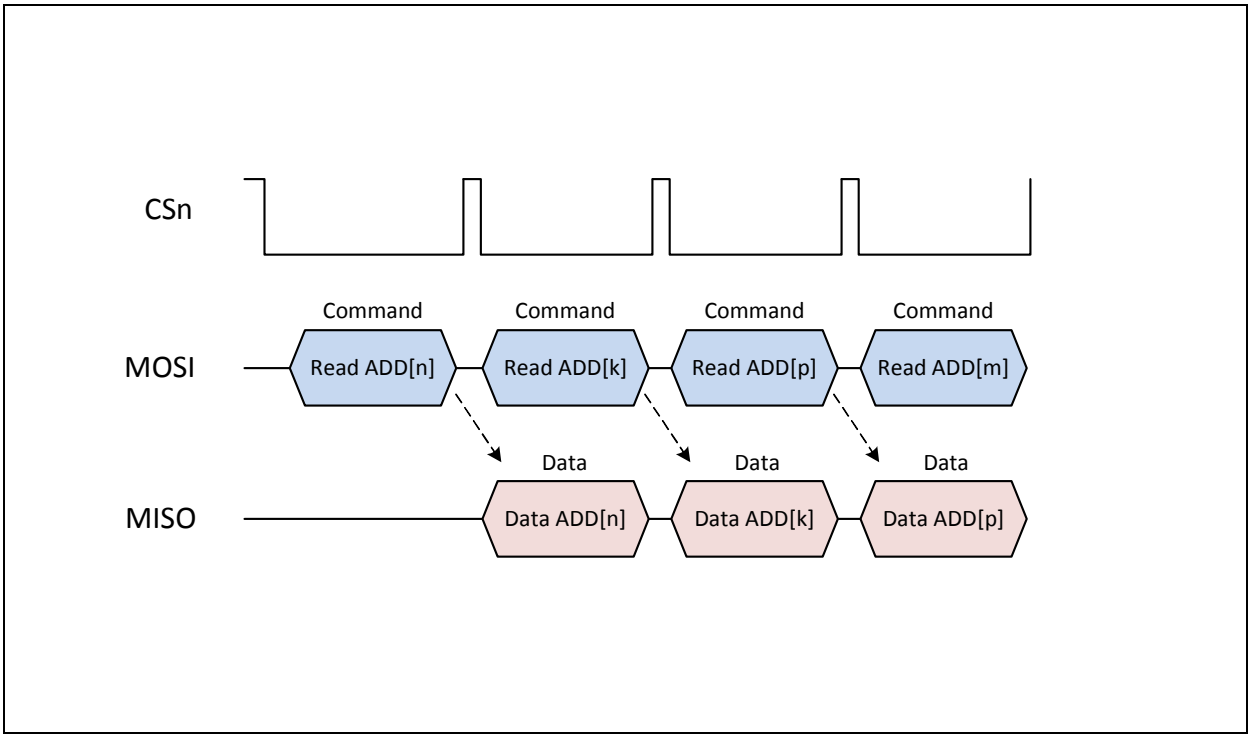

### *SPI Write Data Frame*

**Figure 18:**
**SPI Write Data Frame**

| Bit | 15 | 14 | 13 | 12 | 11 | 10 | 9 | 8 | 7 | 6 | 5 | 4 | 3 | 2 | 1 | 0 |
|---|---|---|---|---|---|---|---|---|---|---|---|---|---|---|---|---|
| | Data 15:2 | | | | | | | | | | | | | | DC | PAR |

| Bit | Name | Description |
|---|---|---|
| 15:2 | Data | 14 bit write data |
| 1 | DC | Don't Care |
| 0 | PAR | Parity bit (even) calculated on the upper 15 bits |

The parity bit PAR is calculated for the upper 15 bits.

In a SPI write transaction, the write command frame (e.g. Write ADD[n]) is followed by a data frame (e.g. DATA [x]). In addition to writing an address in the AS5050A, a write command frame causes the old contents of the addressed register (e.g. DATA [y]) to be sent on MISO in the following frame. This is followed by the new contents of the addressed register (DATA [x]) as shown in Figure 19.

**Figure 19:**
**SPI Write Transaction**

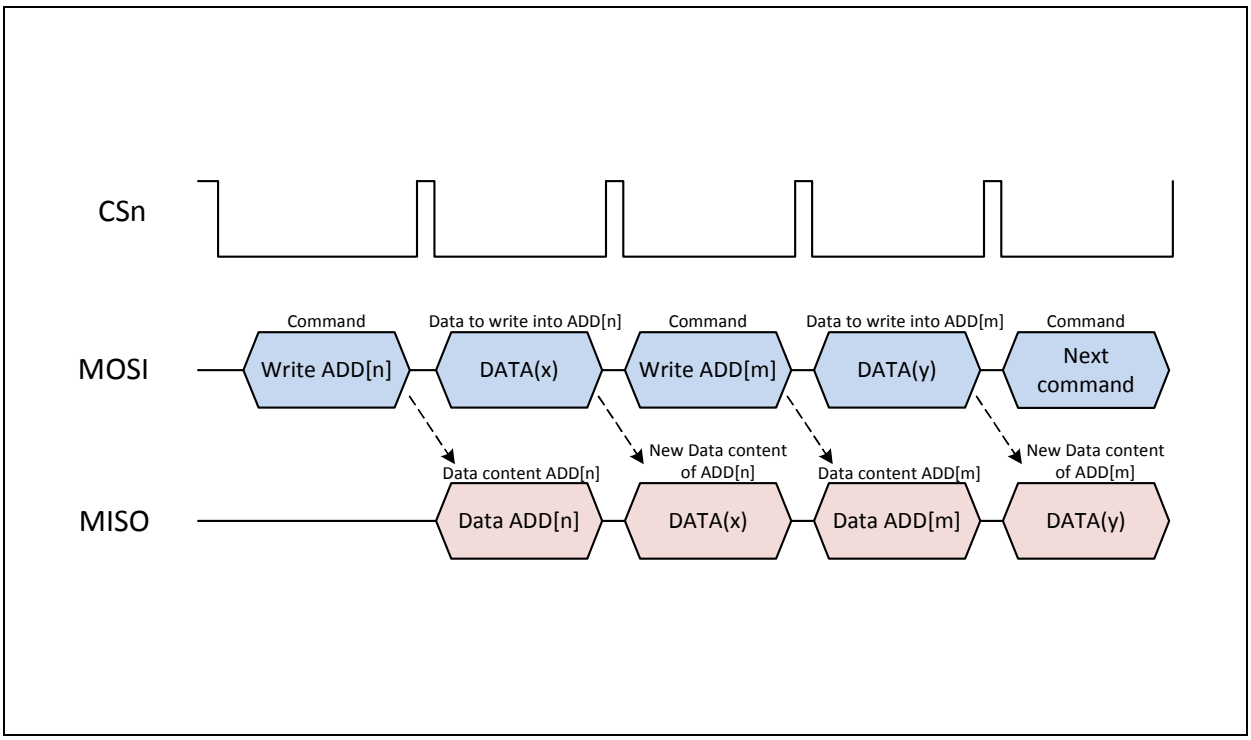

## SPI Connection to the microcontroller

**Figure 20:**
**Single Slave Mode**

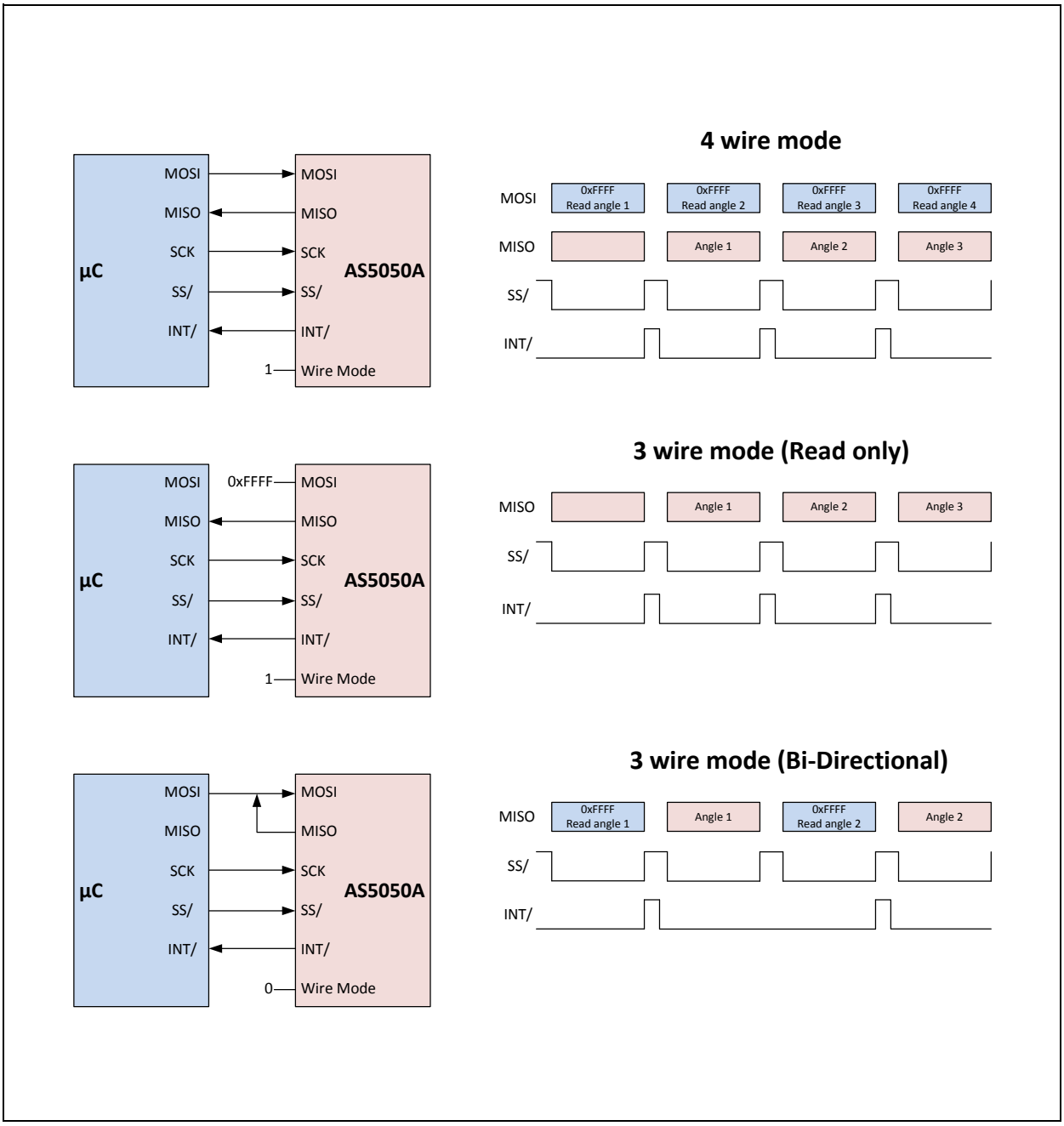

## *Daisy Chain, 4 Wire*

**Figure 21:**
**Daisy Chain, 4 Wire**

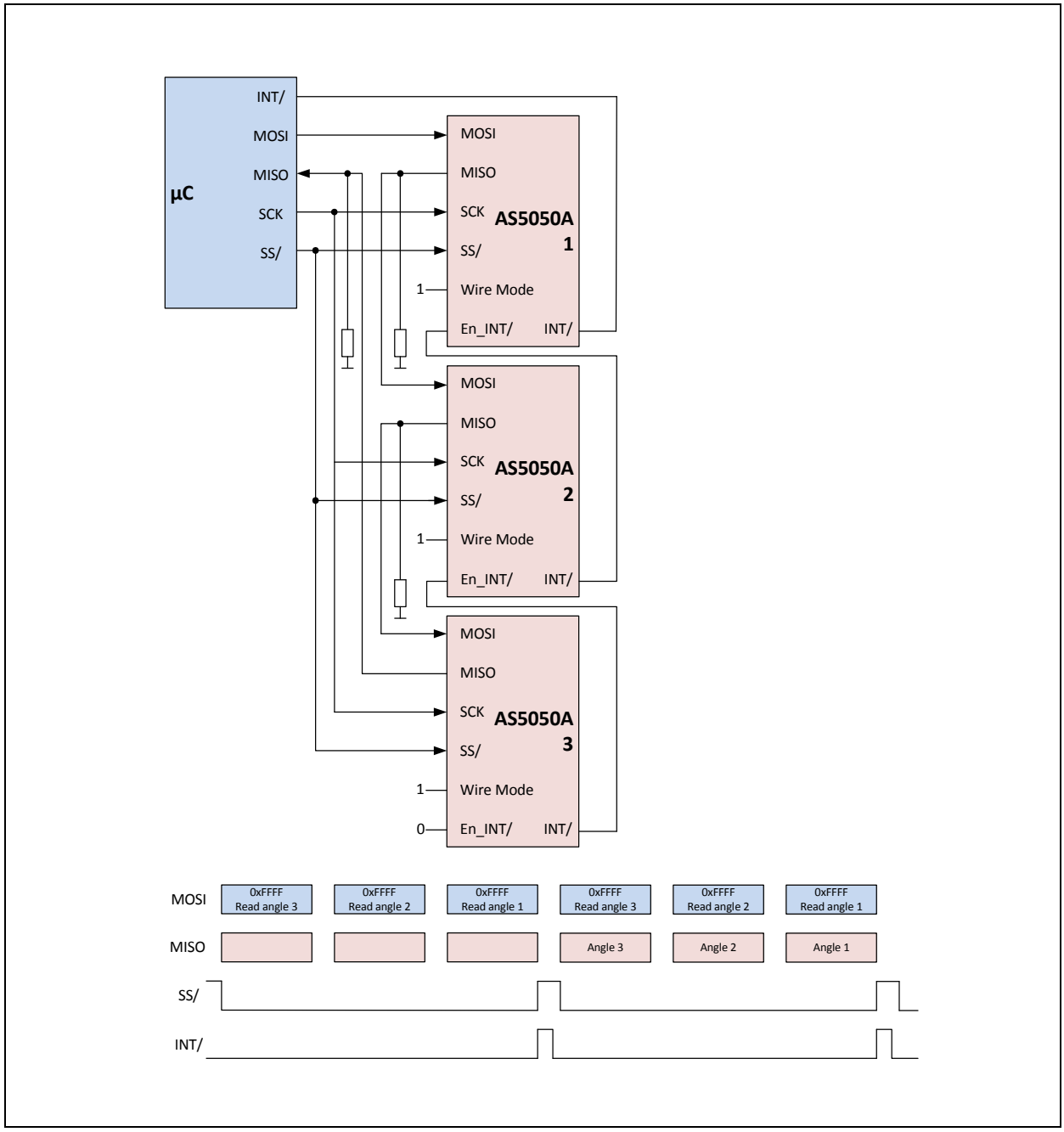

## Registers

The on-chip registers are shown in Figure 22.

**Figure 22:**
**Registers**

| Name | Address | Bits | Mod | Default | Description |
|---|---|---|---|---|---|
| POR OFF | 0x3F22 | 7:0 | R/W | 0x0000 | Power On Reset OFF |
| Software Reset | 0x3C00 | 13:0 | W | 0x0000 | Software Reset |
| Master Reset | 0x33A5 | 13:0 | W | 0x0000 | Master Reset |
| Clear EF | 0x3380 | 13:0 | R | 0x0000 | Clear Error Flag |
| NOP | 0x0000 | 13:0 | W | 0x0000 | No Operation |
| AGC | 0x3FF8 | 5:0 | R/W | 0x0020 | Automatic Gain Control |
| Angular Data | 0x3FFF | 13:0 | R | 0x0000 | Measured Angle |
| Error Status | 0x335A | 13:0 | R | 0x0000 | Error Status Register |
| System Config | 0x3F20 | 9:13 | R/W | 0x000 | System Configuration Register 1 |

### POR OFF (0x3F22)

Writing the value 0x5A to the POR OFF Register (0x3F22) deactivates the POR cell and reduces the current consumption in low power mode ($I_{OFF}$).

### Software Reset (0x3C00)

Writing to the Software Reset Register initiates a Software Reset. With the RES SPI bit of the Data Package set to 1 it is possible to reset the SPI registers. After a software reset a new angle conversion is started; this is needed to set the AS5050A into an initial state. This angle is not readable by the microcontroller.

The AS5050A is ready as soon as INT/ is driven low or a minimum time ($t_{readout}$) has elapsed.

**Figure 23:**
**Software Reset Command**

| Bit | 15 | 14 | 13 | 12 | 11 | 10 | 9 | 8 | 7 | 6 | 5 | 4 | 3 | 2 | 1 | 0 |
|---|---|---|---|---|---|---|---|---|---|---|---|---|---|---|---|---|
| Content | 0 | 1 | 1 | 1 | 1 | 0 | 0 | 0 | 0 | 0 | 0 | 0 | 0 | 0 | 0 | PAR |

**Figure 24:**
**Data Package**

| Bit | 15 | 14 | 13 | 12 | 11 | 10 | 9 | 8 | 7 | 6 | 5 | 4 | 3 | 2 | 1 | 0 |
|---|---|---|---|---|---|---|---|---|---|---|---|---|---|---|---|---|
| | DC | | | | | | | | | | | | | RES SPI | DC | PAR |

| Bit | Name | Description |
|---|---|---|
| 15:3 | DC | Don't Care |
| 2 | RES SPI | If set to 1 the SPI registers are reset as well |
| 1 | DC | Don't Care |
| 0 | PAR | Parity bit (even) calculated on the upper 15 bits |

## Master Reset (0x33A5)

Writing to the Master Reset Register initiates a Master Reset. This is similar to the Software Reset with the difference that no data package is needed.

**Figure 25:**
**Master Reset Command**

| Bit | 15 | 14 | 13 | 12 | 11 | 10 | 9 | 8 | 7 | 6 | 5 | 4 | 3 | 2 | 1 | 0 |
|---|---|---|---|---|---|---|---|---|---|---|---|---|---|---|---|---|
| Content | 0 | 1 | 1 | 0 | 0 | 1 | 1 | 1 | 0 | 1 | 0 | 0 | 1 | 0 | 1 | PAR |

## Clear Error Flag (0x3380)

Reading from the Clear Error Flag Register clears the Error Flag which is contained in every Read Data Frame. The Read data is 0x0000 which indicates a successful clear command.

**Figure 26:**
**Clear Error Flag Command**

| Bit | 15 | 14 | 13 | 12 | 11 | 10 | 9 | 8 | 7 | 6 | 5 | 4 | 3 | 2 | 1 | 0 |
|---|---|---|---|---|---|---|---|---|---|---|---|---|---|---|---|---|
| Content | 1 | 1 | 1 | 0 | 0 | 1 | 1 | 1 | 0 | 0 | 0 | 0 | 0 | 0 | 0 | PAR |

Possible Conditions which force the Error Flag to be set:

- Wrong parity
- Wrong command
- Wrong number of clocks

**Note(s):** If the error flag is set to 1 because of a communication problem the flag remains set until a Clear Error Flag Command is executed.

### No Operation (0x0000)

The No Operation (NOP) command represents a dummy write to the AS5050A. If no error happens the chip responds with 0x0000.

**Figure 27:**
**NOP Command**

| Bit | 15 | 14 | 13 | 12 | 11 | 10 | 9 | 8 | 7 | 6 | 5 | 4 | 3 | 2 | 1 | 0 |
|---|---|---|---|---|---|---|---|---|---|---|---|---|---|---|---|---|
| Content | 0 | 0 | 0 | 0 | 0 | 0 | 0 | 0 | 0 | 0 | 0 | 0 | 0 | 0 | 0 | PAR |

### AGC – Automatic Gain Control (0x3FF8)

Writing a value different than zero to this register, stops the AGC loop and keeps a constant AGC value.

**Figure 28:**
**AGC**

| Name | Read/Write | Bit Position | Description |
|---|---|---|---|
| AGC | R/W | 5:0 | Automatic Gain Control value |

### Angular Data (0x3FFF)

**Figure 29:**
**Angular Data**

| Name | Read/Write | Bit Position | Description |
|---|---|---|---|
| Alarm Lo | R | 13 | Alarm flag, which indicates a too weak magnetic field |
| Alarm Hi | R | 12 | Alarm flag, which indicates a too strong magnetic field |
| Angle Value | R | 9:0 | Angular value in 10 bit binary code |

### Alarm Bits

Figure 30:
Alarm Bits

| Alarm Hi | Alarm Lo | Description |
|---|---|---|
| 0 | 0 | AGC level is higher than the minimum value and lower than the maximum value. |
| 0 | 1 | AGC level is higher than the maximum level. The magnetic field is too weak. |
| 1 | 0 | AGC level is lower than the minimum level. The magnetic field is too strong. |
| 1 | 1 | Indicates if a major system error has occurred during the last READ ANGLE command or if the WOW flag is active. During active WOW a READ ANGLE command must not be sent. Error flags can be read out with the error status register. |

### Error Status (0x335A)

For detailed information of the Error Status Register please refer to "Error Monitoring" on page 22.

### System Configuration Register 1 (0x3F20)

The gain setting can be configured in system configuration register 1. This register contains factory settings. To change the gain setting, read out the register, modify the gain setting and write the new configuration. The factory settings must not be changed.

Figure 31:
System Configuration Register

| Name | Read/Write | Bit Position | Description |
|---|---|---|---|
| Resolution | R | 13:12 | 01 indicates 10 bit resolution |
| Chip ID | R | 11:9 | Silicon version 010 |
| Factory Setting | R/W | 8:5 | Don't change |
| Gain | R/W | 4:3 | Sets gain setting |
| Factory Setting | R/W | 2:0 | Don't change |

## Error Monitoring

The correct operation and communication of the AS5050A is ensured by several error flags. Every read access is supported by a communication error flag (EF) to indicate a transmission error in a previous host transmission.

For additional information on the Error Status, please refer to the application note *AN5000_ErrorMonitoring*.

## Error Status Register

**Figure 32:**
**Error Status Register and Description**

| Bit | Type | Description |
|---|---|---|
| **Error Status DSP** | | |
| 13 | Reserved | |
| 12 | FIELD_ALARM_LO | AGC level is equal or even higher than the maximum level. Magnetic field is too weak. |
| 11 | FIELD_ALARM_HI | AGC level is equal or even lower than the minimum level. Magnetic field is too strong. |
| 10 | RANGE | The RANGE flag signals that the Hall bias circuit has reached the head room limit. This might occur at the combination of low supply voltage, high temperature and low magnetic field. In this case, manually reducing the AGC setting (Figure 28) can be used to recover a valid Hall biasing condition. |
| 9 | CORDICOV | The CORDIC calculates the angle. An error occurs when the input signals of the CORDIC are too large. The internal algorithm fails. |
| 8 | ADCOV | The ADCOV bit occurs if the magnetic input field strength is too large for at least one Hall element. This can be the case if the magnet is displaced. Second reason could be that the offset compensation after power up is not finished yet. If this happens some dummy READ ANGLE commands may be sent to settle the offset loop. |
| **Error Status System** | | |
| 7 | Reserved | |
| 6 | Reserved | |
| 5 | Reserved | |
| 4 | WOW | When a READ ANGLE command is in progress, the WOW flag is set to 1. At the end of the measurement the WOW flag is cleared to 0. Only in case of deadlock the WOW flag is stuck high; in which case a MASTER RESET must be sent to clear the deadlock. |
| **Error Status SPI** | | |
| 3 | Reserved | |
| 2 | ADDMON | Set to high when non existing address is used. |
| 1 | CLKMON | Set to high when the amount of clock cycles is not correct. |
| 0 | PARITY | Set to high when the transmitted parity bit does not match to calculated parity bit. |

## Package Drawings & Markings

The device is available in a 16-pin QFN (4x4x0.9 mm) package. The axis of the magnet must be aligned over the center of the package.

**Figure 33:**
**Package FN – Dual Flat No-Lead Packaging Configuration**

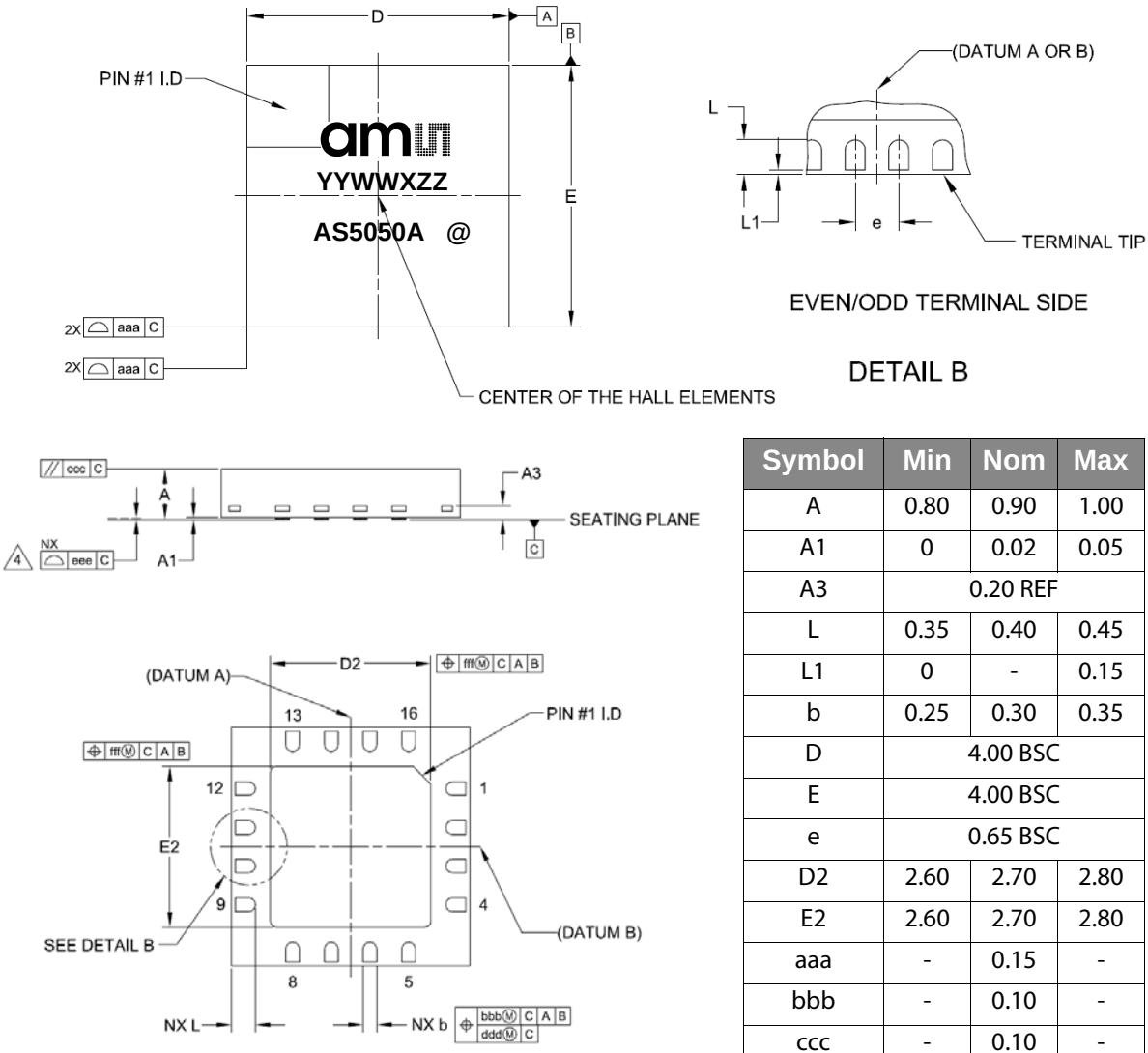


| Symbol | Min | Nom | Max |
|---|---|---|---|
| A | 0.80 | 0.90 | 1.00 |
| A1 | 0 | 0.02 | 0.05 |
| A3 | | 0.20 REF | |
| L | 0.35 | 0.40 | 0.45 |
| L1 | 0 | - | 0.15 |
| b | 0.25 | 0.30 | 0.35 |
| D | | 4.00 BSC | |
| E | | 4.00 BSC | |
| e | | 0.65 BSC | |
| D2 | 2.60 | 2.70 | 2.80 |
| E2 | 2.60 | 2.70 | 2.80 |
| aaa | - | 0.15 | - |
| bbb | - | 0.10 | - |
| ccc | - | 0.10 | - |
| ddd | - | 0.05 | - |
| eee | - | 0.08 | - |
| fff | - | 0.10 | - |
| N | | 16 | |

**Note(s) and/or Footnote(s):**

1. Dimensions and tolerancing conform to *ASME Y14.5M-1994*.
2. All dimensions are in millimeters. Angles are in degrees.
3. Dimension b applies to metallized terminal and is measured between 0.25mm and 0.30mm from terminal tip. Dimension L1 represents terminal full back from package edge up to 0.15mm is acceptable.
4. Coplanarity applies to the exposed heat slug as well as the terminal.
5. Radius on terminal is optional.
6. N is the total number of terminals.

**Figure 34:**
**Marking: YYWWXZZ**

| YY | WW | X | ZZ |
|---|---|---|---|
| Year (i.e. 04 for 2004) | Week | Assembly plant identifier | Assembly traceability code |

**Figure 35:**
**Vertical Cross Section of QFN 16-pin 4x4x0.85 mm package**

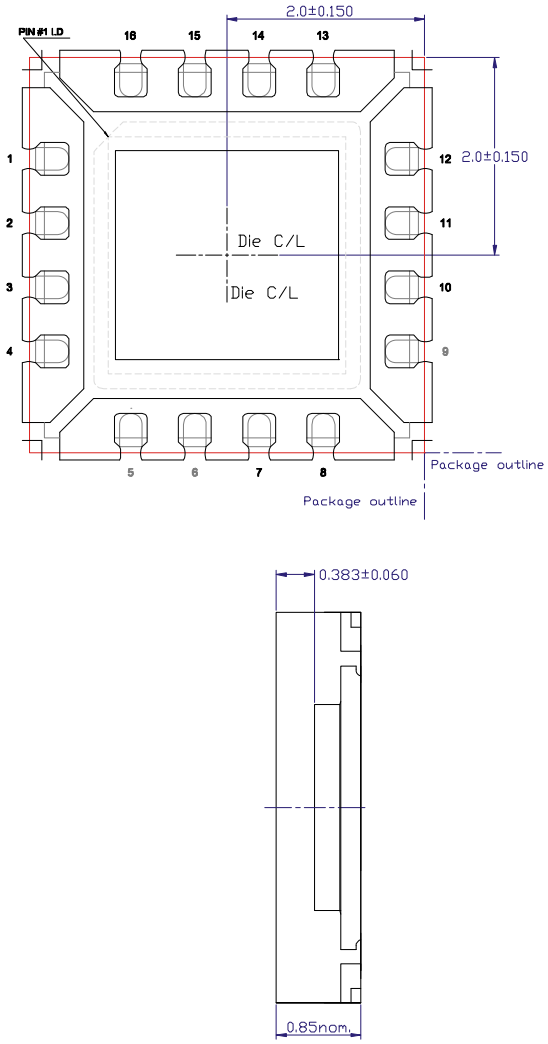


**Note(s) and/or Footnote(s):**

1. All dimensions in mm.
2. Die thickness 0.254 ± 0.013
3. Adhesive thickness 0.010 ± 10, +0.01, -0.0025
4. Lead frame thickness 0.203 typ.

# Ordering & Contact Information

**Figure 36:**
**Ordering Information**

| Ordering Code | Package | Marking | Delivery Form | Delivery Quantity |
|---|---|---|---|---|
| AS5050A-BQFT | 16-pin QFN | AS5050A | 13" Tape & Reel in dry pack | 6000 |
| AS5050A-BQFM | 16-pin QFN | AS5050A | 7" Tape & Reel in dry pack | 500 |

Buy our products or get free samples online at:
www.ams.com/ICdirect

Technical Support is available at:
www.ams.com/Technical-Support

Provide feedback about this document at:
www.ams.com/Document-Feedback

For further information and requests, e-mail us at:
ams_sales@ams.com

For sales offices, distributors and representatives, please visit:
www.ams.com/contact

**Headquarters**
ams AG
Tobelbaderstrasse 30
8141 Unterpremstaetten
Austria, Europe

Tel: +43 (0) 3136 500 0

Website: www.ams.com

## RoHS Compliant & ams Green Statement

**RoHS:** The term RoHS compliant means that ams AG products fully comply with current RoHS directives. Our semiconductor products do not contain any chemicals for all 6 substance categories, including the requirement that lead not exceed 0.1% by weight in homogeneous materials. Where designed to be soldered at high temperatures, RoHS compliant products are suitable for use in specified lead-free processes.

**ams Green (RoHS compliant and no Sb/Br):** ams Green defines that in addition to RoHS compliance, our products are free of Bromine (Br) and Antimony (Sb) based flame retardants (Br or Sb do not exceed 0.1% by weight in homogeneous material).

**Important Information:** The information provided in this statement represents ams AG knowledge and belief as of the date that it is provided. ams AG bases its knowledge and belief on information provided by third parties, and makes no representation or warranty as to the accuracy of such information. Efforts are underway to better integrate information from third parties. ams AG has taken and continues to take reasonable steps to provide representative and accurate information but may not have conducted destructive testing or chemical analysis on incoming materials and chemicals. ams AG and ams AG suppliers consider certain information to be proprietary, and thus CAS numbers and other limited information may not be available for release.

## Copyrights & Disclaimer

Copyright ams AG, Tobelbader Strasse 30, 8141 Unterpremstaetten, Austria-Europe. Trademarks Registered. All rights reserved. The material herein may not be reproduced, adapted, merged, translated, stored, or used without the prior written consent of the copyright owner.

Devices sold by ams AG are covered by the warranty and patent indemnification provisions appearing in its General Terms of Trade. ams AG makes no warranty, express, statutory, implied, or by description regarding the information set forth herein. ams AG reserves the right to change specifications and prices at any time and without notice. Therefore, prior to designing this product into a system, it is necessary to check with ams AG for current information. This product is intended for use in commercial applications. Applications requiring extended temperature range, unusual environmental requirements, or high reliability applications, such as military, medical life-support or life-sustaining equipment are specifically not recommended without additional processing by ams AG for each application. This product is provided by ams AG “AS IS” and any express or implied warranties, including, but not limited to the implied warranties of merchantability and fitness for a particular purpose are disclaimed.

ams AG shall not be liable to recipient or any third party for any damages, including but not limited to personal injury, property damage, loss of profits, loss of use, interruption of business or indirect, special, incidental or consequential damages, of any kind, in connection with or arising out of the furnishing, performance or use of the technical data herein. No obligation or liability to recipient or any third party shall arise or flow out of ams AG rendering of technical or other services.

## Document Status

| Document Status | Product Status | Definition |
|---|---|---|
| Product Preview | Pre-Development | Information in this datasheet is based on product ideas in the planning phase of development. All specifications are design goals without any warranty and are subject to change without notice |
| Preliminary Datasheet | Pre-Production | Information in this datasheet is based on products in the design, validation or qualification phase of development. The performance and parameters shown in this document are preliminary without any warranty and are subject to change without notice |
| Datasheet | Production | Information in this datasheet is based on products in ramp-up to full production or full production which conform to specifications in accordance with the terms of ams AG standard warranty as given in the General Terms of Trade |
| Datasheet (discontinued) | Discontinued | Information in this datasheet is based on products which conform to specifications in accordance with the terms of ams AG standard warranty as given in the General Terms of Trade, but these products have been superseded and should not be used for new designs |

# Revision Information

| Changes from 2-05 (2014-Sep-24) to current revision 2-06 (2014-Oct-14) | Page |
|---|---|
| Updated Figure 22 | 19 |
| Updated Figure 23 | 19 |
| Updated Figure 29 | 21 |
| Updated figure 30 | 22 |

**Note(s) and/or Footnote(s):**

1. Page and figure numbers for the previous version may differ from page and figure numbers in the current revision.
2. Correction of typographical errors is not explicitly mentioned.

## Content Guide


**1 General Description**
1 Key Benefits & Features
2 Applications
2 Block Diagram

**3 Pin Assignment**
**5 Absolute Maximum Ratings**

**6 Electrical Characteristics**
6 Operating Conditions
6 System Parameters
7 DC/AC Characteristics

**8 Detailed Description**
8 Noise Performance
9 Typical Application
10 Power Supply Filter
10 Reading an Angle
*10 Reducing the Angle Jitter*
10 Operating Modes
11 Daisy Chain

**12 SPI Interface**
12 SPI Timing
13 SPI Wire Mode Selection
14 SPI Transaction
14 SPI Command Frame
15 SPI Read Data Frame
16 SPI Write Data Frame
17 SPI Connection to the microcontroller
18 Daisy Chain, 4 Wire

**19 Registers**
19 POR OFF (0x3F22)
19 Software Reset (0x3C00)
20 Master Reset (0x33A5)
20 Clear Error Flag (0x3380)
21 No Operation (0x0000)
21 AGC – Automatic Gain Control (0x3FF8)
21 Angular Data (0x3FFF)
22 Alarm Bits
22 Error Status (0x335A)
22 System Configuration Register 1 (0x3F20)

**22 Error Monitoring**
23 Error Status Register

**24 Package Drawings & Markings**
**26 Ordering & Contact Information**
**27 RoHS Compliant & ams Green Statement**
**28 Copyrights & Disclaimer**
**29 Document Status**
**30 Revision Information**