AS1910 - AS1915

DataSheet

Dual-Voltage Microprocessor Supervisory Circuits with Manual Reset and Watchdog

1 General Description

The AS1910 - AS1915 microprocessor supervisory circuits were designed to generate a reset when one of the two monitored supply voltages falls below a factory-trimmed threshold, and to maintain the reset for a minimum timeout period when both supplies are above their reset thresholds. Guaranteed to be in the correct state for VCC higher than +1.0V, these devices are ideal for multiple-voltage systems with strict monitoring requirements.

The AS1913/AS1914/AS1915 feature factory-trimmed thresholds to monitor a primary voltage between 1.8 and 3.6V, and a secondary voltage between 0.9 and 2.5V.

For the AS1910/AS1911/AS1912, a secondary monitoring voltage can be user-adjusted via an external resistor divider down to 0.6V.

The devices are available with the reset output types listed in Table 1.

Table 1. Standard Products

Model	Reset Output Type
AS1910/AS1913	Active-Low Push/Pull
AS1911/AS1914	Active-High Push/Pull
AS1912/AS1915	Active-Low Open-Drain

The AS1910 - AS1915 include a manual-reset input for systems that never fully power down the microprocessor. Additionally, these devices feature a watchdog timer to help ensure that the processor is operating within proper code boundaries.

The AS1910 - AS1915 are available in a 6-pin SOT23 package.

Figure 1. Typical Application Diagram

2 Key Features

- Primary VCC Supervisory Range: +1.8 to +3.6V
- Secondary VCC Supervisory Range: +0.9 to +2.5V (AS1913/AS1914/AS1915)
- User-Adjustable Threshold Down to +0.63V (AS1910/AS1911/AS1912)
- Guaranteed Reset Valid Down to VCC = +1.0V
- Reset Timeout Delay: 215ms
- Manual Reset Input
- Three Reset Output Types
  - Active-High Push/Pull
  - Active-Low Push/Pull
  - Active-Low Open-Drain
- Watchdog Timeout Period: 1.5s
- Immune to Fast Negative VCC Transients
- External Components Not Required
- Operating Temperature Range: -40 to +125°C
- 6-pin SOT23 Package

3 Applications

The devices are ideal for portable and battery-powered systems, embedded controllers, intelligent instruments, automotive systems, critical CPU monitoring, and any multi-supply application.

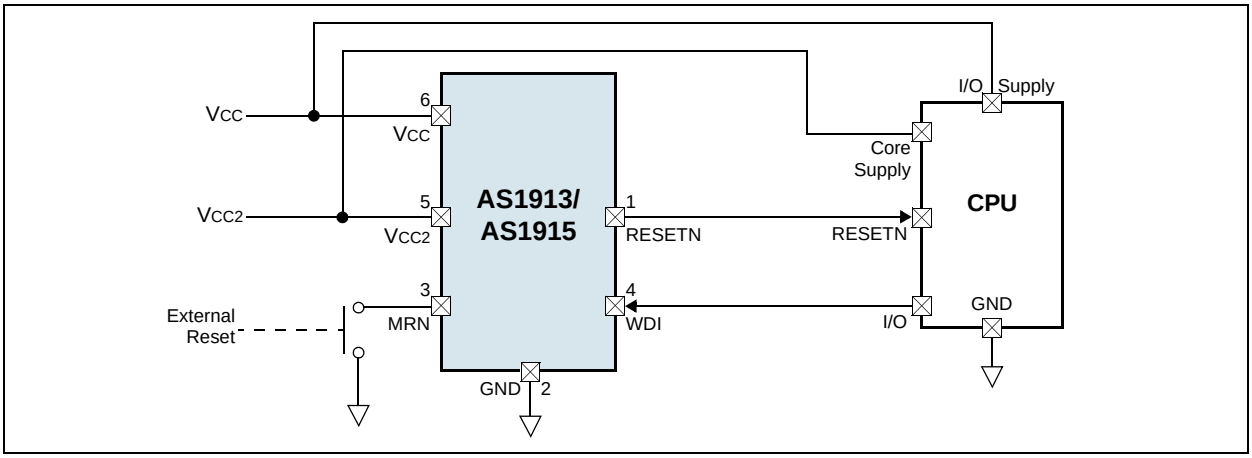

4 Pinout

Pin Assignments

Figure 2. Pin Assignments (Top View)

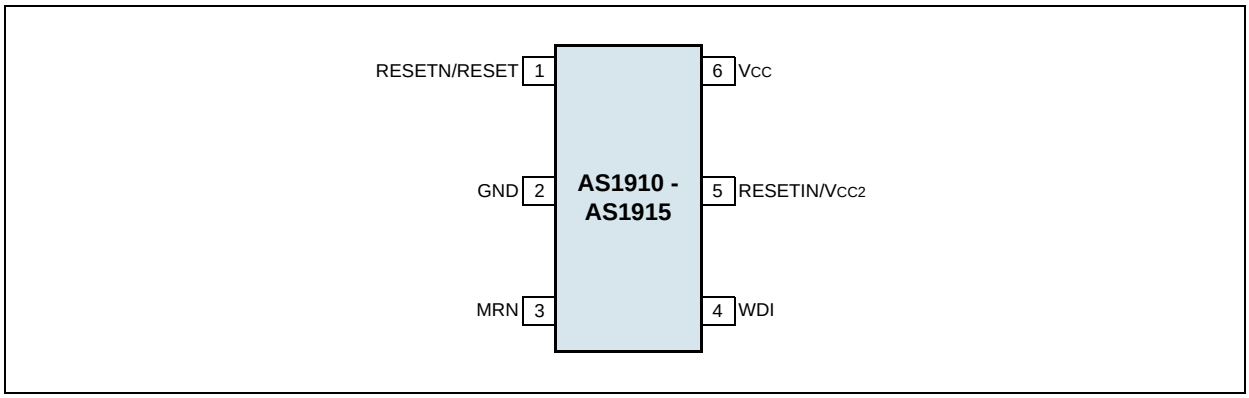

Pin Descriptions

Table 2. Pin Descriptions

Pin Number	Pin Name	Description
1	RESETN	**Active-Low Reset Output** (AS1910, AS1912, AS1913, AS1915). The RESETN signal toggles from high to low when V_{CC}, V_{CC2}, or RESETIN input drops below the factory-trimmed reset threshold (see Table 4 on page 4), or MRN is pulled low, or the watchdog triggers a reset. This output signal remains low for the reset timeout period after all supervised voltages exceed their reset threshold, or MRN goes low to high, or the watchdog triggers a reset.
	RESET	**Active-High Reset Output** (AS1911, AS1914). The RESET signal toggles from low to high when V_{CC}, V_{CC2}, or RESETIN input drops below the factory-trimmed reset threshold (see Table 4 on page 4), or MRN is pulled low, or the watchdog triggers a reset. This output signal remains high for the reset timeout period (see t_{RP} on page 5) after all supervised voltages exceed their reset threshold, or MRN goes low to high, or the watchdog triggers a reset.
2	GND	**Ground**
3	MRN	**Active-Low Manual Reset Input**. Pulling this pin low asserts a reset. This pin is connected to the internal 50kΩ pullup to V_{CC}. This reset remains active as long as MRN is low and for the reset timeout period (see t_{RP} on page 5) after MRN goes high. **Note:** If the manual reset feature is not used, this pin should be unconnected or connected to V_{CC}.
4	WDI	**Watchdog Input**. If WDI remains high or low for longer than the watchdog timeout period (see t_{WD} on page 6), the internal watchdog timer period expires and a reset is triggered for the reset timeout period (see t_{RP} on page 5). The internal watchdog timer clears whenever a reset is a asserted or when WDI senses a rising or falling edge. **Note:** To disable the watchdog feature, this pin must be unconnected or connected to a tri-state buffer output.
5	RESETIN	**User-Adjustable Supervised Voltage Input** (AS1910/AS1911/AS1912). This high-impedance pin serves as the input to the internal reset comparator. Connect this pin to an external resistor-divider network to set the reset threshold voltage (down to 0.63V).
	V_{CC2}	**Primary Supervised Voltage Input** (AS1913/AS1914/AS1915). This pin serves as the secondary supervised voltage input.
6	V_{CC}	**Primary Supervised Voltage Input**. This pin serves as the primary supervised voltage input.

5 Absolute Maximum Ratings

Stresses beyond those listed in Table 3 may cause permanent damage to the device. These are stress ratings only, and functional operation of the device at these or any other conditions beyond those indicated in Section 5 Electrical Characteristics on page 3 is not implied. Exposure to absolute maximum rating conditions for extended periods may affect device reliability.

Table 3. Absolute Maximum Ratings

Parameter	Min	Max	Units	Comments
V_{CC}, V_{CC2} to GND	-0.3	+5.0	V	
Open-Drain RESETN	-0.3	+7.0	V	
Push/Pull RESET, RESETN	-0.3	V_{CC} + 0.3	V	
MRN, WDI, RESETIN to GND	-0.3	V_{CC} + 0.3	V	
Input Current (V_{CC})		20	mA	
Output Current (RESET, RESETN)		20	mA	
Continuous Power Dissipation (T_{AMB} = +70ºC)		696	mW	Derate 8.7mW/ºC above +70ºC
Operating Temperature Range	-40	+125	ºC	
Junction Temperature		+150	ºC	
Storage Temperature Range	-65	+150	ºC	
Package Body Temperature		+260	ºC	The reflow peak soldering temperature (body temperature) specified is in accordance with *IPC/JEDEC J-STD-020C "Moisture/Reflow Sensitivity Classification for Non-Hermetic Solid State Surface Mount Devices".* The lead finish for Pb-free leaded packages is matte tin (100% Sn).

6 Electrical Characteristics

V_{CC} = +2.7 to +3.6V for AS19xx-T/S/R, V_{CC} = +2.1 to +2.75V for AS19xx- Z/Y, V_{CC} = +1.53 to +2.0V for AS19xx-W/V; T_{AMB} = -40 to +125ºC (unless otherwise specified). Typ values @ T_{AMB} = +25°C.

Table 4. Electrical Characteristics

Symbol	Parameter [1]	Conditions		Min	Typ	Max	Units
V_{CC}	Operating Voltage Range	T_{AMB} = 0 to +85ºC		1.0		3.6	V
		T_{AMB} = -40 to +125ºC		1.2		3.6	
I_{CC}	V_{CC} Supply Current (MRN and WDI Not Connected)	V_{CC} = +3.6V, No Load, T_{AMB} = -40ºC to +85ºC			5.8	13	µA
		V_{CC} = +3.6V, No Load, T_{AMB} = -40 to +125ºC				21	
I_{CC2}	V_{CC2} Supply Current	V_{CC2} = +2.5V				2	µA
V_{TH}	V_{CC} Reset Threshold (V_{CC} Falling)	T_{AMB} = -40 to +85ºC	AS19xx-T	2.994	3.08	3.154	V
		T_{AMB} = -40 to +125ºC		2.972		3.179	
		T_{AMB} = -40 to +85ºC	AS19xx-S	2.848	2.93	3.000	
		T_{AMB} = -40 to +125ºC		2.827		3.024	
		T_{AMB} = -40 to +85ºC	AS19xx-R	2.556	2.63	2.693	
		T_{AMB} = -40 to +125ºC		2.538		2.714	
		T_{AMB} = -40 to +85ºC	AS19xx-Z	2.255	2.32	2.376	
		T_{AMB} = -40 to +125ºC		2.239		2.394	
		T_{AMB} = -40 to +85ºC	AS19xx-Y	2.129	2.19	2.243	
		T_{AMB} = -40 to +125ºC		2.113		2.260	
		T_{AMB} = -40 to +85ºC	AS19xx-W	1.623	1.67	1.710	
		T_{AMB} = -40 to +125ºC		1.612		1.723	
		T_{AMB} = -40 to +85ºC	AS19xx-V	1.536	1.58	1.618	
		T_{AMB} = -40 to +125ºC		1.525		1.631	
V_{TH2}	V_{CC2} Reset Threshold	T_{AMB} = -40 to +85ºC	AS19xx-Z	2.237	2.313	2.387	V
		T_{AMB} = -40 to +125ºC		2.232		2.394	
		T_{AMB} = -40 to +85ºC	AS19xx-Y	2.116	2.188	2.258	
		T_{AMB} = -40 to +125ºC		2.111		2.265	
		T_{AMB} = -40 to +85ºC	AS19xx-W	1.610	1.665	1.718	
		T_{AMB} = -40 to +125ºC		1.607		1.723	
		T_{AMB} = -40 to +85ºC	AS19xx-V	1.523	1.575	1.625	
		T_{AMB} = -40 to +125ºC		1.520		1.630	
		T_{AMB} = -40 to +85ºC	AS19xx-I	1.342	1.388	1.432	
		T_{AMB} = -40 to +125ºC		1.339		1.437	
		T_{AMB} = -40 to +85ºC	AS19xx-H	1.270	1.313	1.355	
		T_{AMB} = -40 to +125ºC		1.267		1.359	
		T_{AMB} = -40 to +85ºC	AS19xx-G	1.073	1.11	1.146	
		T_{AMB} = -40 to +125ºC		1.071		1.149	
		T_{AMB} = -40 to +85ºC	AS19xx-F	1.015	1.05	1.084	
		T_{AMB} = -40 to +125ºC		1.013		1.087	
		T_{AMB} = -40 to +85ºC	AS19xx-E	0.806	0.833	0.860	
		T_{AMB} = -40 to +125ºC		0.804		0.862	
		T_{AMB} = -40 to +85ºC	AS19xx-D	0.762	0.788	0.813	
		T_{AMB} = -40 to +125ºC		0.760		0.816	

Table 4. Electrical Characteristics (Continued)

Symbol	Parameter [1]	Conditions	Min	Typ	Max	Units
	Reset Threshold Temperature Coefficient			60		ppm/ºC
	Reset Threshold Hysteresis			8 x V_{TH}		mV
$V_{RESETINTH}$	RESETIN Threshold	$V_{RESETINTH}$ Falling, T_{AMB} = 0 to +85ºC	0.615	0.630	0.645	V
		T_{AMB} = -40 to +125ºC	0.61		0.65	
	RESETIN Hysteresis			8 x V_{TH}		mV
$I_{RESETIN}$	RESETIN Input Current [2]	T_{AMB} = -40 to +85ºC	-25		+25	nA
		T_{AMB} = -40 to +125ºC	-100		+100	
t_{RD}	V_{CC} to Reset Output Delay	V_{CC} = V_{TH} to (V_{TH} - 100mV)		55		µs
	RESETIN to Reset Output Delay	$V_{RESETIN}$ = $V_{RESETINTH}$ to ($V_{RESETINTH}$ - 30mV)		45		µs
t_{RP}	Reset Timeout Period	T_{AMB} = -40 to +85ºC	140	215	280	ms
		T_{AMB} = -40 to +125ºC	100		320	
V_{OL}	RESETN Output Low (Push/Pull or Open-Drain)	V_{CC} ≥ 1.0V, I_{SINK} = 50µA, Reset Asserted, T_{AMB} = 0 to +85ºC			0.3	V
		V_{CC} ≥ 1.2V, I_{SINK} = 100µA, Reset Asserted			0.3	
		V_{CC} ≥ 2.55V, I_{SINK} = 1.2mA, Reset Asserted			0.3	
		V_{CC} ≥ 3.3V, I_{SINK} = 3.2mA, Reset Asserted			0.4	
V_{OH}	RESETN Output High (Push/Pull Only)	V_{CC} ≥ 1.8V, I_{SOURCE} = 200µA, Reset Not Asserted	0.8 x V_{CC}			V
		V_{CC} ≥ 3.15V, I_{SOURCE} = 500µA, Reset Not Asserted	0.8 x V_{CC}			
		V_{CC} ≥ 3.3V, I_{SOURCE} = 800µA, Reset Not Asserted	0.8 x V_{CC}			
I_{LKG}	Open-Drain RESETN Output Leakage Current	RESETN Not Asserted			1.0	µA
		T_{AMB} = +25ºC			0.2	
V_{OH}	RESET Output High (Push/Pull Only)	V_{CC} ≥ 1.0V, I_{SOURCE} = 1µA, Reset Asserted, T_{AMB} = 0 to +85ºC	0.8 x V_{CC}			V
		V_{CC} ≥ 1.50V, I_{SOURCE} = 100µA, Reset Asserted	0.8 x V_{CC}			
		V_{CC} ≥ 2.55V, I_{SOURCE} = 500µA, Reset Asserted	0.8 x V_{CC}			
		V_{CC} ≥ 3.3V, I_{SOURCE} = 800µA, Reset Asserted	0.8 x V_{CC}			
V_{OL}	RESET Output Low (Push/Pull Only)	V_{CC} ≥ 1.8V, I_{SINK} = 500µA, Reset Asserted			0.3	V
		V_{CC} ≥ 3.15V, I_{SINK} = 1.2mA, Reset Asserted			0.3	
		V_{CC} ≥ 3.3V, I_{SINK} = 3.2mA, Reset Asserted			0.4	
Manual Reset Input						
V_{IL}	MRN Input voltage				0.3 x V_{CC}	V
V_{IH}			0.7 x V_{CC}			

Table 4. Electrical Characteristics (Continued)

Symbol	Parameter [1]	Conditions	Min	Typ	Max	Units
	MRN Minimum Input Pulse		1			µs
	MRN Transient Rejection			90		ns
	MRN to Reset Delay			130		ns
	MRN Pullup Resistance		25	50	75	kΩ
Watchdog Input						
t_{WD}	Watchdog Timeout Period	T_{AMB} = -40 to +85ºC	1.12	1.5	2.4	s
		T_{AMB} = -40 to +125ºC	0.80		2.60	
t_{WDI}	WDI Pulse Width [2]		20			ns
V_{IL}	WDI Input Voltage				0.3 x V_{CC}	V
V_{IH}			0.7 x V_{CC}			
I_{WDI}	WDI Input Current	WDI = V_{CC}, Time Average		80	160	µA
		WDI = 0, Time Average	-20	-11		

1. Over-temperature limits are guaranteed by design and not production tested. Devices tested at +25ºC.
2. Guaranteed by design and not production tested.

7 Typical Operating Characteristics

TAMB = +25ºC (unless otherwise specified).

Figure 3. Normalized Reset Threshold Delay vs. Temperature

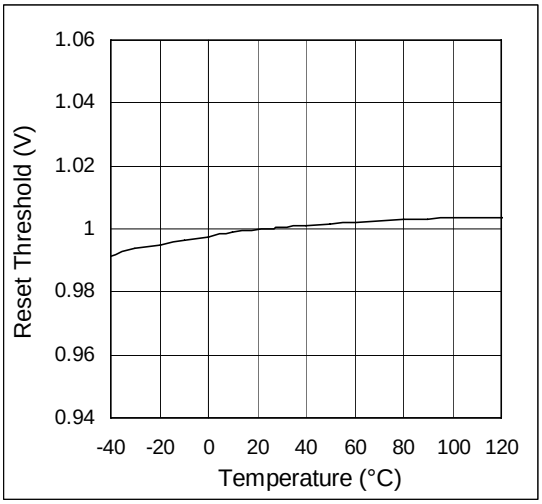

Figure 4. VOUT vs. VCC; VCC2 = 2.50V, VTH = 1.58V, Active-Low (Typ)

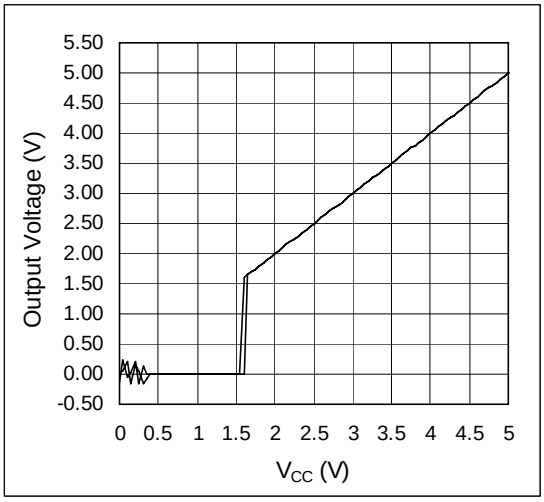

Figure 5. Reset Timeout Period vs. Temperature

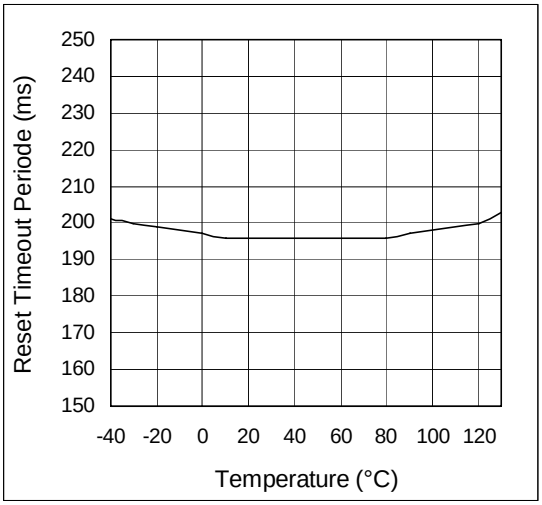

Figure 6. Supply Current vs. Temperature

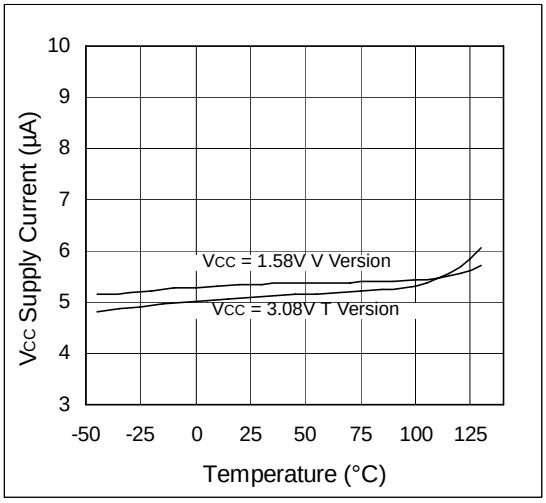

Figure 7. VOH vs. ISOURCE; VCC = 3.2V

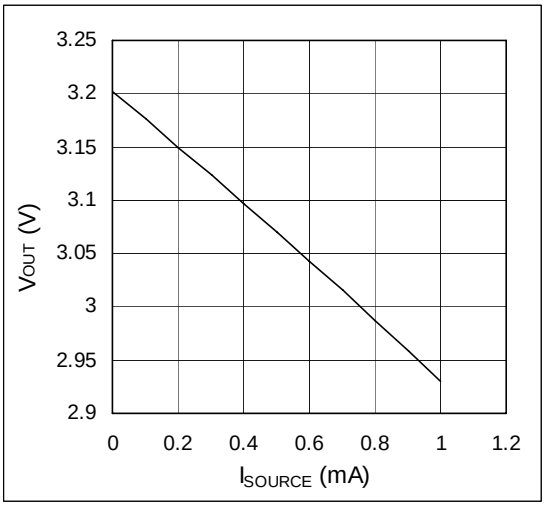

Figure 8. VOL vs. ISINK; VCC = 3.2V

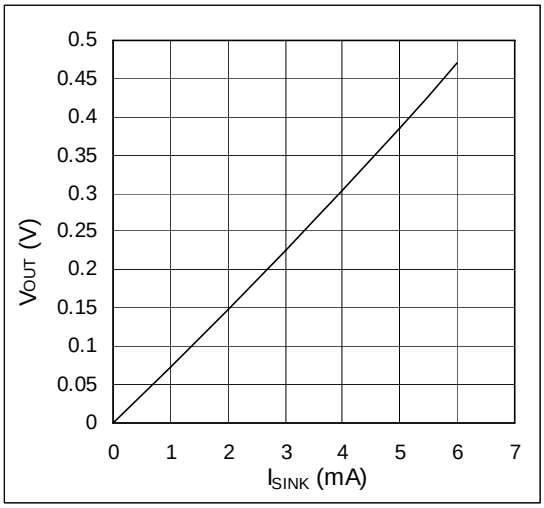

8 Detailed Description

The AS1910 - AS1915 supervisory circuits were designed to generate a reset when one of the two monitored supply voltages falls below its factory-trimmed trip threshold (see V_{TH} on page 4 and V_{TH2} on page 4), and to maintain the reset for a minimum timeout period (see t_{RP} on page 5) after all supplies have stabilized.

The integrated watchdog timer (see Watchdog Input on page 10) helps mitigate against bad programming code or clock signals, and/or poor peripheral response. An active-low manual reset input (see Manual Reset Input on page 10) allows for an externally activated system reset.

RESET/RESETN

Whenever one of the monitored voltages falls below its reset threshold, the RESET output (AS1910, AS1912, AS1913, AS1915) asserts low or the RESETN output (AS1911, AS1914) asserts high. Once all monitored voltages have stabilized, an internal timer keeps the reset asserted for the reset timeout period (t_{RP}). After the t_{RP} period, the RESET or RESETN output return to their original state (see Figure 10).

Figure 9. Functional Diagram of V_{CC} Supervisory Application

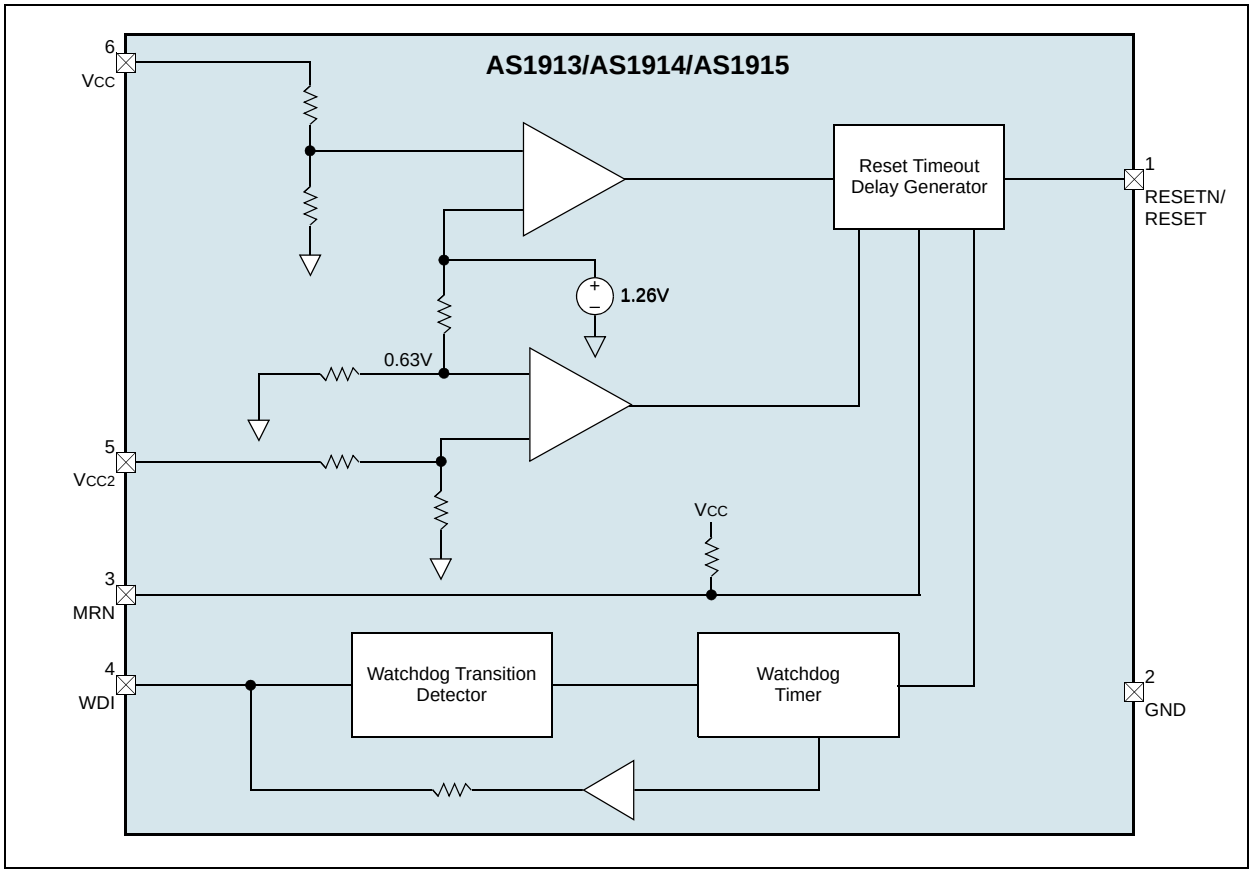

Figure 10. Reset Timing Diagram

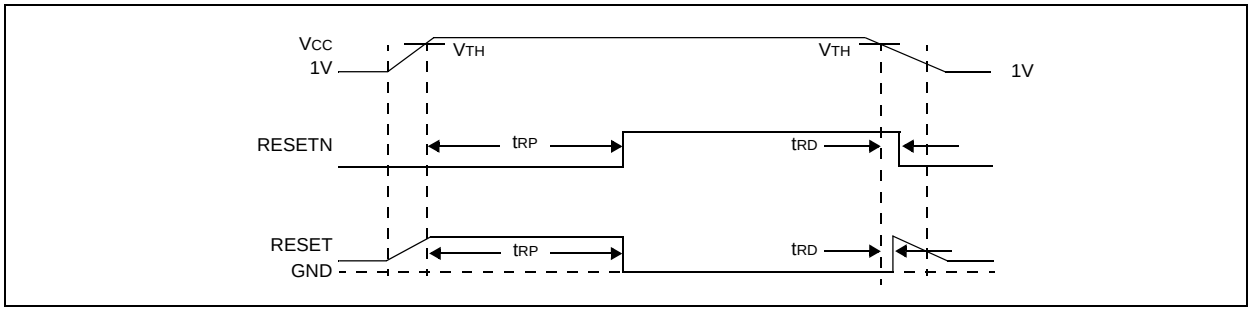

Figure 11. Functional Diagram of RESETIN Supervisory Application

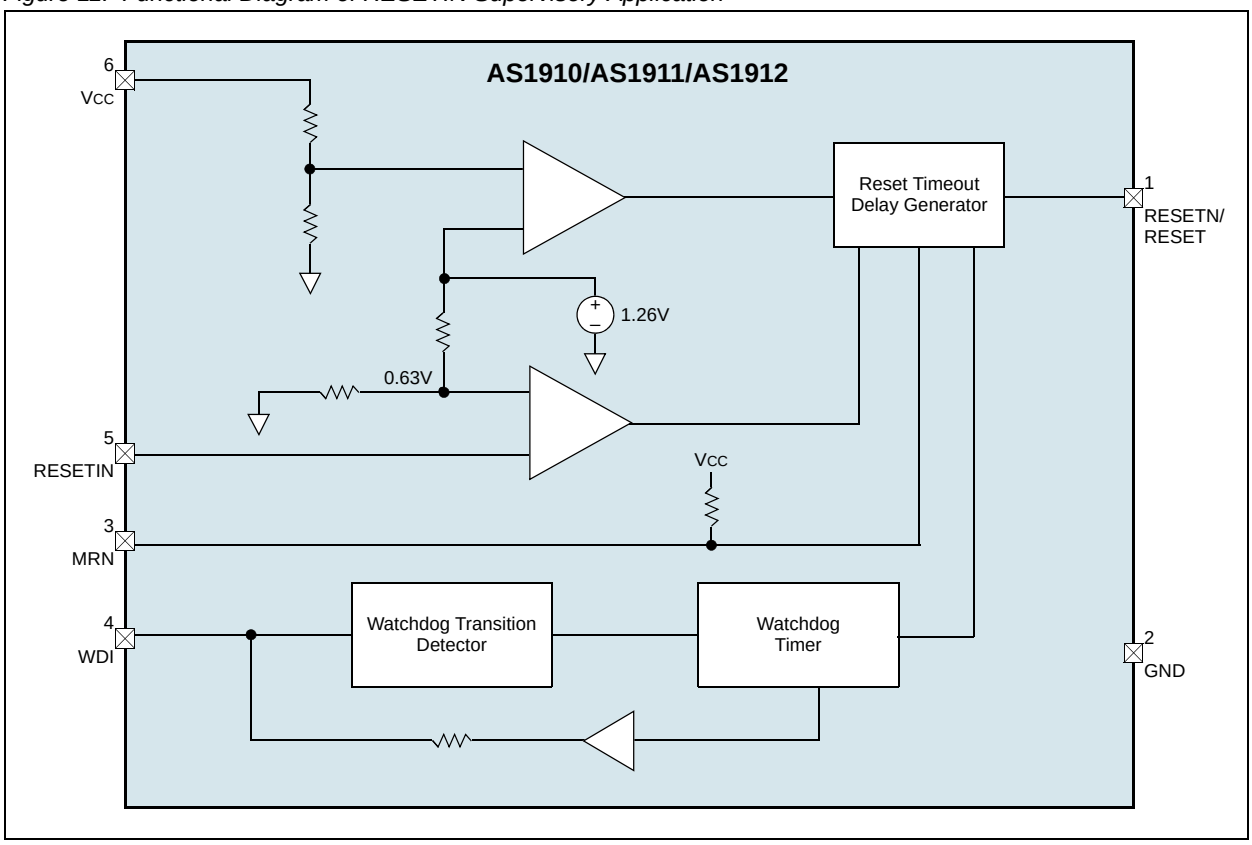

RESETIN

The AS1910/AS1911/AS1912 feature a user-adjustable supervisory voltage input (RESETIN). The threshold voltage for RESETIN is between 0.61 and 0.65V (0.63 typ).

Figure 12. Voltage Monitoring Circuit

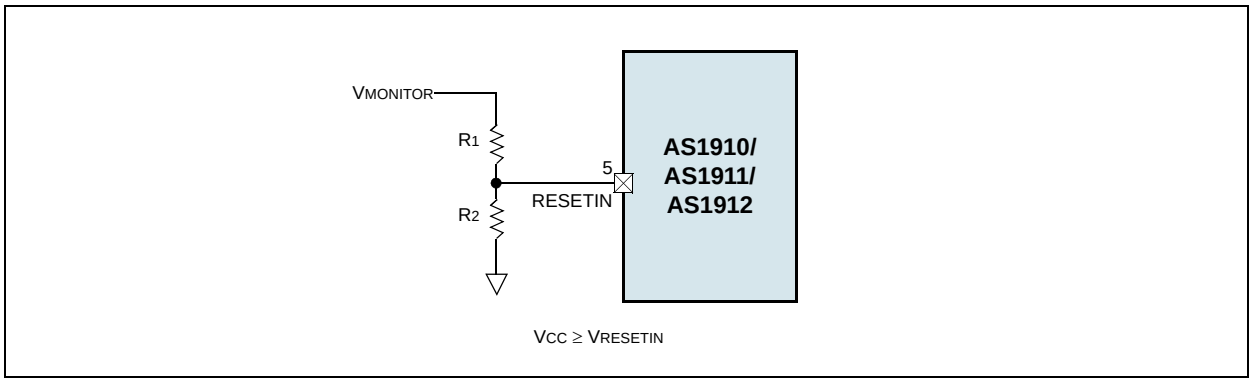

To monitor a voltage higher than 0.63V, connect a resistor divider network to the circuit as shown in Figure 12. For the circuit shown in Figure 12, the threshold at VMONITOR is:

$$V_{MONITOR_TRIP} = 0.63V\ [(R_1 + R_2)/R_2] \qquad (EQ\ 1)$$

Note: Since RESETIN is powered by VCC, VRESETIN must not be larger than VCC.

Watchdog Input

The integrated watchdog feature can be used to monitor processor activity via pin WDI, and can detect pulses as short as 50ns. The watchdog requires that the processor toggle the watchdog logic input at regular intervals, within a specified minimum timeout period (1.5s, typ). A reset is asserted for the reset timeout period. As long as reset is asserted, the timer remains cleared and is not incremented. When reset is deasserted, the watchdog timer starts counting (Figure 11).

Note: The watchdog timer can be cleared with a reset pulse or by toggling WDI.

Figure 13. Watchdog Timing Relationship

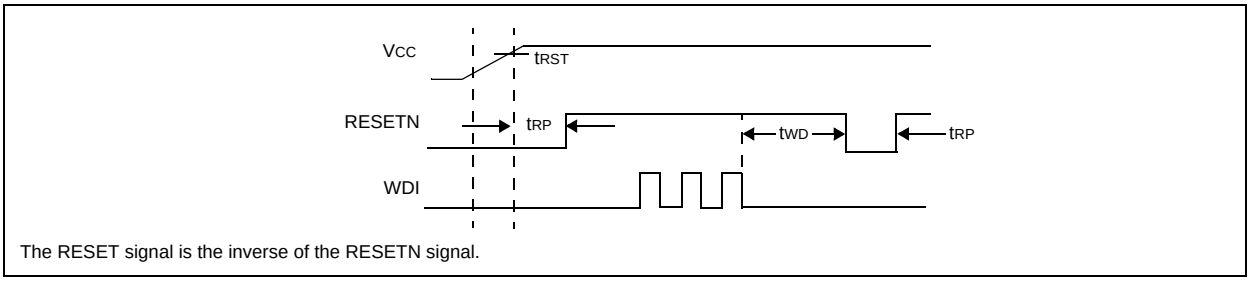

The watchdog is internally driven low during most (87.5%) of the watchdog timeout period (see tWD on page 6) and high for the rest of the watchdog timeout period. When pin WDI is left unconnected, this internal driver clears the watchdog timer every 1.4s. When WDI is tri-stated or is not connected, the maximum allowable leakage current is 10µA and the maximum allowable load capacitance is 200pF.

Note: The watchdog function can be disabled by leaving pin WDI unconnected or connecting it to a tri-state output buffer.

Manual Reset Input

The active-low pin MRN is used to force a manual reset. This input can be driven by CMOS logic levels or with open-drain collector outputs.

Pulling MRN low asserts a reset which will remain asserted as long as MRN is kept low, and for the timeout period (see tRP on page 5) after MRN goes high (140ms min). The manual reset circuitry has an internal 50kΩ pullup resistor, thus it can be left open if not used.

To create a manual-reset circuit, connect a normally open momentary switch from pin MRN to GND (see Figure 1 on page 1); external debounce circuitry is not required in this configuration.

If MRN is driven via long cables or the device is used in a noisy environment, a 0.1µF capacitor between pin MRN and GND will provide additional noise immunity.

9 Application Information

Watchdog Input Current

The watchdog input is driven through an internal buffer and an internal series resistor from the watchdog timer (see Figure 11 on page 9). When pin WDI is left unconnected (watchdog disabled), the watchdog timer is serviced within the watchdog timeout period (see t_{WD} on page 6) by a low-high-low pulse from the counter chain. For minimum watchdog input current (minimum overall power consumption), pull WDI low for most of the watchdog timeout period, pulsing it low-high-low once within the first 7/8 (87.5%) of the watchdog timeout period to reset the watchdog timer.

Note: If WDI is externally driven high for the majority of the timeout period, up to 160µA can flow into pin WDI.

Interfacing to Bi-Directional CPU Reset Pins

Since the reset outputs of the AS1912 and AS1915 are open drain, these devices interface easily with processors that have bi-directional reset pins. Connecting the processor reset output directly to the AS1912/AS1915 RESETN pin with a single pullup resistor (see Figure 14) allows the AS1912/AS1912 to assert a reset.

Figure 14. AS1912 or AS1915 RESETN-to-CPU Bi-Directional Reset Pin

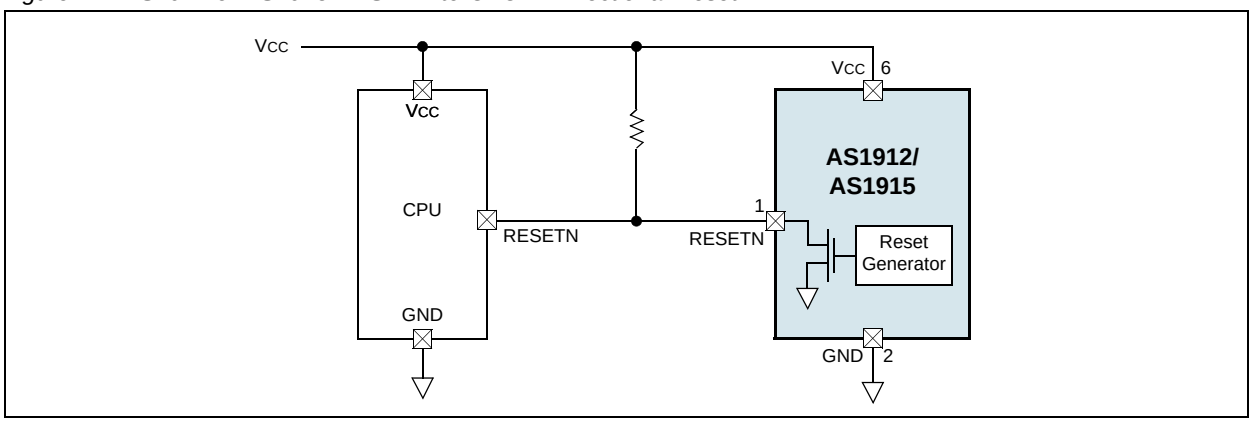

Fast Negative-Going Transients

Fast, negative-going V_{CC} transients normally do not require the CPU to be shutdown. The AS1910 - AS1915 are virtually immune to such transients. Resets are issued to the CPU during power-up, powerdown, and brownout conditions.

Note: V_{CC} transients that go 100mV below the reset threshold and last ≤ 55µs typically will not assert a reset pulse.

Valid Reset to V_{CC} = 0

The AS1910 - AS1915 are guaranteed to operate properly down to V_{CC} = 1V. For applications requiring valid reset levels down to V_{CC} = 0, a pulldown resistor to active-low outputs (push/pull only) and a pullup resistor to active-high outputs (push/pull only) will ensure that the reset line is valid during the interval where the reset output can no longer sink or source current.

Watchdog Tips

Careful consideration should be taken when implementing the AS1910 - AS1915 watchdog feature.

One method of supervising software code execution is to set/reset the watchdog input at different places in the code, rather than pulsing the watchdog input high-low-high or low-high-low. This method avoids a loop condition in which the watchdog timer would continue to be reset inside the loop, preventing the watchdog from ever timing out.

Figure 15 shows a flowchart where the input/output driving the watchdog is set high at the beginning of the routine, set low at the beginning of every subroutine, then set high again when the routine returns to the beginning. If the routine should hang in a subroutine, the problem would quickly be corrected, since the I/O is continually set low and the watchdog timer is allowed to time out, causing a reset or interrupt to be issued (see Watchdog Input Current on page 11). This method results in higher averaged WDI input current over time than a case where WDI is held low for the majority (87.5%) of the timeout period and periodically pulsing it low-high-low.

Figure 15. Example Watchdog Programming Flowchart

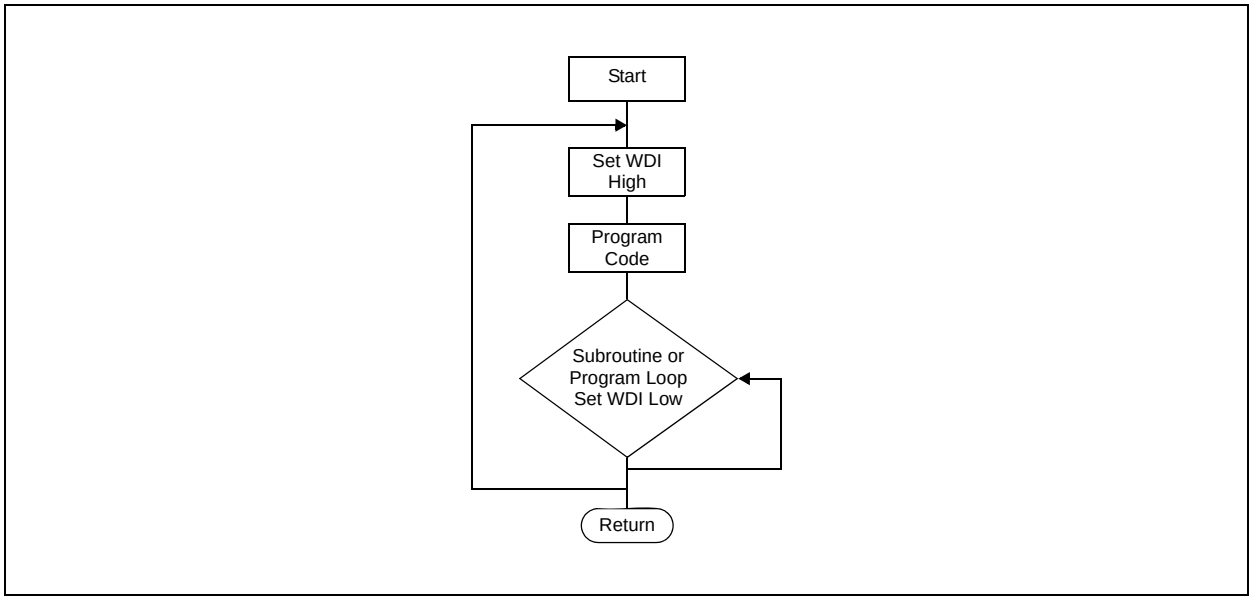

10 Package Drawings and Markings

The devices are available in a 6-pin SOT23 package.

Figure 16. 6-pin SOT23 Package

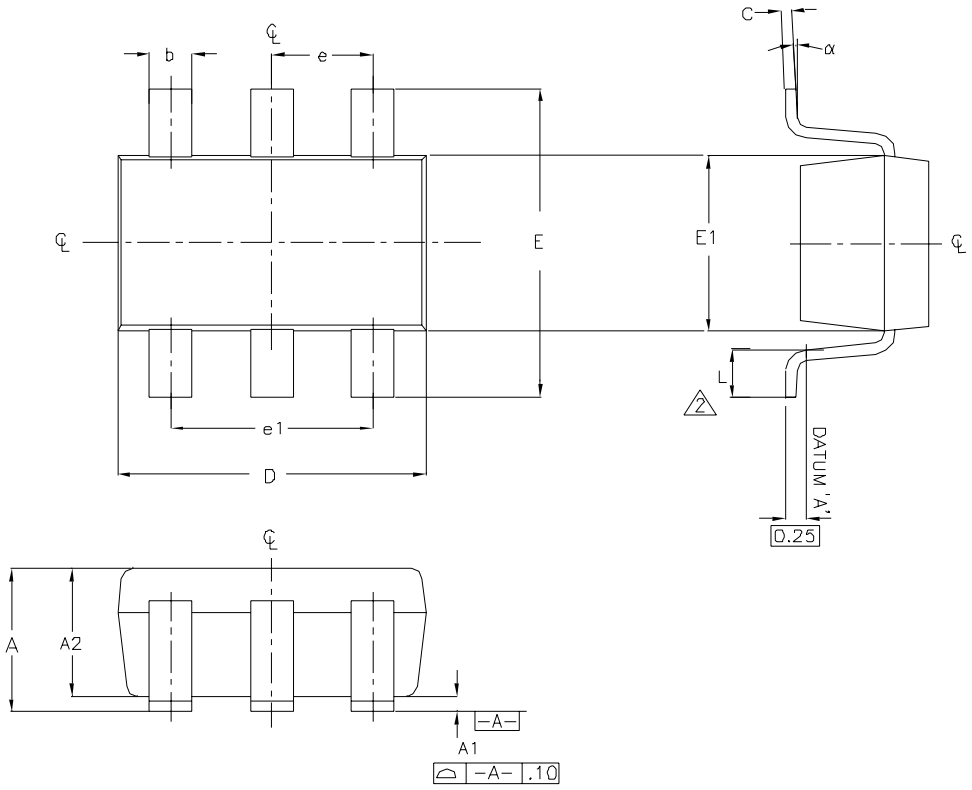

Notes:

1. All dimensions are in millimeters.
2. Foot length measured at intercept point between datum A and lead surface.
3. Package outline inclusive of mold flash 7 metal burr.
4. Package outline inclusive of solder plating.
5. Compliant with *EIAJ SC74A*.
6. PKG ST 0004 Rev A supersedes SOT23-D-2005 Rev C.

Symbol	Min	Max
A	0.90	1.45
A1	0.00	0.15
A2	0.90	1.30
b	0.30	0.50
C	0.09	0.20
D	2.80	3.05
E	2.60	3.00
E1	1.50	1.75
L	0.30	0.55
e	0.95REF	
e1	1.90REF	
α	0º	8º

11 Ordering Information

The devices are available as the standard products shown in Table 5.

Table 5. Ordering Information

Model	Marking	Reset Output Type	Thresholds	Delivery Form	Package
AS1910S-T	ASH3	Active-Low Push/Pull	2.93V, Adjustable	Tape and Reel	6-pin SOT23
AS1910R-T	ASH4	Active-Low Push/Pull	2.63V, Adjustable	Tape and Reel	6-pin SOT23
AS1910Z-T	ASH5	Active-Low Push/Pull	2.32V, Adjustable	Tape and Reel	6-pin SOT23
AS1910V-T	ASH6	Active-Low Push/Pull	1.58V, Adjustable	Tape and Reel	6-pin SOT23
AS1911S-T	ASH7	Active High Push/Pull	2.93V, Adjustable	Tape and Reel	6-pin SOT23
AS1911R-T	ASH8	Active High Push/Pull	2.63V, Adjustable	Tape and Reel	6-pin SOT23
AS1911Z-T	ASH9	Active High Push/Pull	2.32V, Adjustable	Tape and Reel	6-pin SOT23
AS1911V-T	ASIA	Active High Push/Pull	1.58V, Adjustable	Tape and Reel	6-pin SOT23
AS1912S-T	ASIB	Open Drain	2.93V, Adjustable	Tape and Reel	6-pin SOT23
AS1912R-T	ASIC	Open Drain	2.63V, Adjustable	Tape and Reel	6-pin SOT23
AS1912Z-T	ASID	Open Drain	2.32V, Adjustable	Tape and Reel	6-pin SOT23
AS1912V-T	ASIE	Open Drain	1.58V, Adjustable	Tape and Reel	6-pin SOT23
AS1913TZ-T	ASIF	Active-Low Push/Pull	3.08V, 2.313V	Tape and Reel	6-pin SOT23
AS1913SF-T	ASIG	Active-Low Push/Pull	2.93V,1.05V	Tape and Reel	6-pin SOT23
AS1913VD-T	ASIH	Active-Low Push/Pull	1.58V, 0.788V	Tape and Reel	6-pin SOT23
AS1914TZ-T	ASII	Active High Push/Pull	3.08V, 2.313V	Tape and Reel	6-pin SOT23
AS1914SF-T	ASIJ	Active High Push/Pull	2.93V,1.05V	Tape and Reel	6-pin SOT23
AS1914VD-T	ASIK	Active High Push/Pull	1.58V, 0.788V	Tape and Reel	6-pin SOT23
AS1915TZ-T	ASIL	Open-Drain	3.08V, 2.313V	Tape and Reel	6-pin SOT23
AS1915SF-T	ASIM	Open-Drain	2.93V,1.05V	Tape and Reel	6-pin SOT23
AS1915VD-T	ASIN	Open-Drain	1.58V, 0.788V	Tape and Reel	6-pin SOT23

Copyrights

Copyright © 1997-2007, austriamicrosystems AG, Schloss Premstaetten, 8141 Unterpremstaetten, Austria-Europe. Trademarks Registered ®. All rights reserved. The material herein may not be reproduced, adapted, merged, translated, stored, or used without the prior written consent of the copyright owner.

All products and companies mentioned are trademarks or registered trademarks of their respective companies.

Disclaimer

Devices sold by austriamicrosystems AG are covered by the warranty and patent indemnification provisions appearing in its Term of Sale. austriamicrosystems AG makes no warranty, express, statutory, implied, or by description regarding the information set forth herein or regarding the freedom of the described devices from patent infringement. austriamicrosystems AG reserves the right to change specifications and prices at any time and without notice. Therefore, prior to designing this product into a system, it is necessary to check with austriamicrosystems AG for current information. This product is intended for use in normal commercial applications. Applications requiring extended temperature range, unusual environmental requirements, or high reliability applications, such as military, medical life-support or life-sustaining equipment are specifically not recommended without additional processing by austriamicrosystems AG for each application. For shipments of less than 100 parts the manufacturing flow might show deviations from the standard production flow, such as test flow or test location.

The information furnished here by austriamicrosystems AG is believed to be correct and accurate. However, austriamicrosystems AG shall not be liable to recipient or any third party for any damages, including but not limited to personal injury, property damage, loss of profits, loss of use, interruption of business or indirect, special, incidental or consequential damages, of any kind, in connection with or arising out of the furnishing, performance or use of the technical data herein. No obligation or liability to recipient or any third party shall arise or flow out of austriamicrosystems AG rendering of technical or other services.

Contact Information

Headquarters
austriamicrosystems AG
A-8141 Schloss Premstaetten, Austria

Tel: +43 (0) 3136 500 0
Fax: +43 (0) 3136 525 01

For Sales Offices, Distributors and Representatives, please visit:

http://www.austriamicrosystems.com/contact