high performance needs great design.

Datasheet: AS1109 8-Bit LED Driver with Diagnostics

Please be patient while we update our brand image as
austriamicrosystems and TAOS are now ams.

AS1109

Constant-Current, 8-Bit LED Driver with Diagnostics

1 General Description

The AS1109 is designed to drive up to 8 LEDs through a fast serial interface and features 8 output constant current drivers and an on-chip diagnostic read-back function.

The high clock-frequency (up to 50MHz), adjustable output current, and flexible serial interface makes the device perfectly suited for high-volume transmission applications.

Output current is adjustable (up to 100mA/channel) using an external resistor (REXT).

The serial interface with Schmitt trigger inputs includes an integrated shift register. Additionally, an internal data register stores the currently displayed data.

The device features integrated diagnostics for over-temperature, open-LED, and shorted-LED conditions. Integrated registers store global fault status information during load as well as the detailed temperature/open-LED/shorted-LED diagnostics results.

The AS1109 also features a low-current diagnostic mode to minimize display flicker during fault testing.

With an operating temperature range from -40 to +125°C the AS1109 is also ideal for industrial applications.

The AS1109 is available in a 16-pin SOIC-150, a 16-pin QFN (4x4mm) and the 16-pin QSOP-150 package.

2 Key Features

- 8 Constant-Current Output Channels
- Excellent Output Current Accuracy
  - Between Channels: ±2%
  - Between AS1109 Devices: ±2%
- Output Current Per Channel: 0.5 to 100mA
- Controlled In-Rush Current
- Over-Temperature, Open-LED, Shorted-LED Diagnostics Functions
- Low-Current Test Mode
- Global Fault Monitoring
- Low Shutdown Mode Current: 3µA
- Fast Serial Interface: up to 50MHz
- Cascaded Configuration
- Fast Output Drivers Suitable for PWM
- 16-pin SOIC-150, 16-pin QFN (4x4mm) and 16-pin QSOP-150 Package

3 Applications

The device is ideal for fixed- or slow-rolling displays using static or multiplexed LED matrix and dimming functions, large LED matrix displays, mixed LED display and switch monitoring, displays in elevators, public transports (underground, trains, buses, taxis, airplanes, etc.), large displays in stadiums and public areas, price indicators in retail stores, promotional panels, bar-graph displays, industrial controller displays, white good panels, emergency light indicators, and traffic signs.

Figure 1. Main Diagram and Pin Assignments

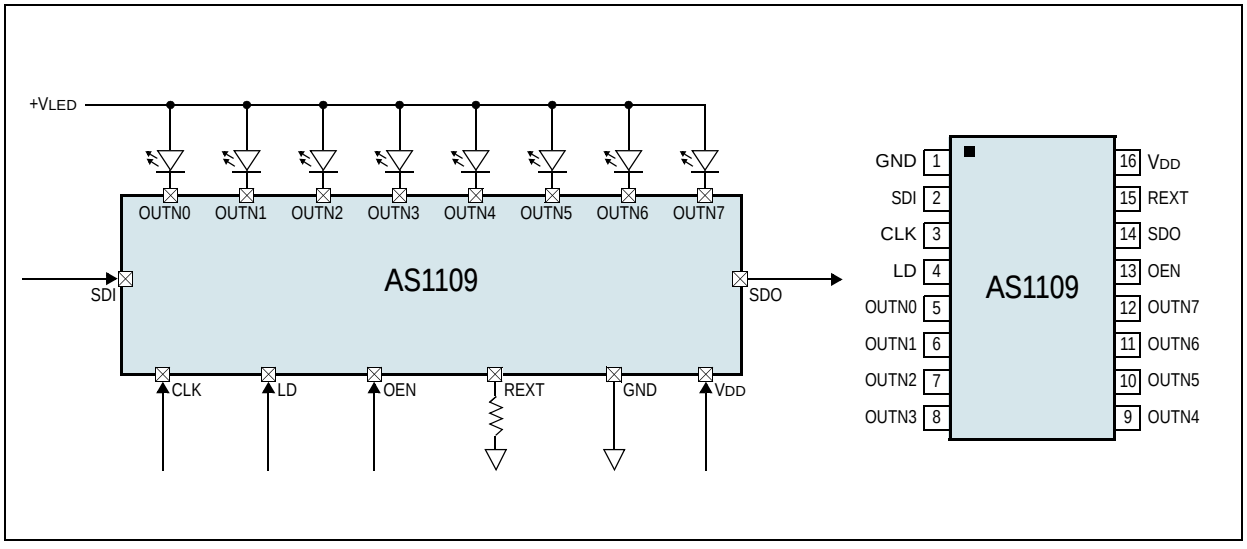

4 Pin Assignments

Figure 2. Pin Assignments (Top View)

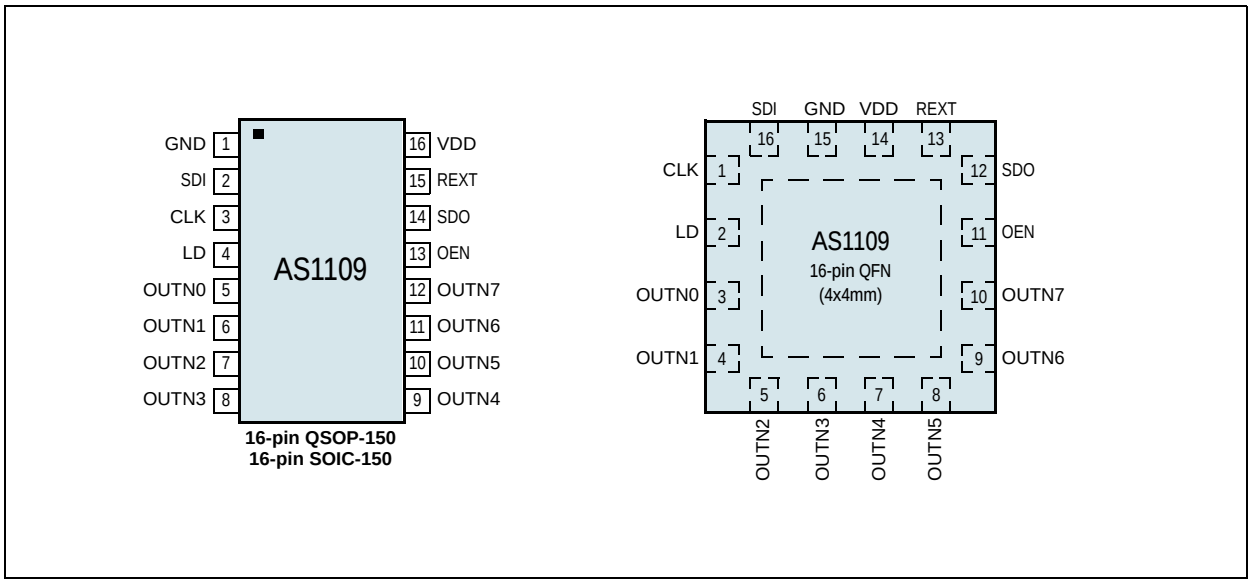

4.1 Pin Descriptions

Table 1. Pin Descriptions

Pin Number		Pin Name	Description
16-pin QSOP-150 16-pin SOIC-150	16-pin QFN (4x4mm)		
1	15	GND	Ground
2	16	SDI	Serial Data Input
3	1	CLK	Serial Data Clock. The rising edge of the CLK signal is used to clock data into and at the falling edge out of the AS1109 shift register. In error mode, the rising edge of the CLK signal is used to switch error modes.
4	2	LD	Serial Data Load. Data is transferred to the data register at the rising edge of this pin.
5:12	3:10	OUTN0:7	Output Current Drivers. These pins are used as LED drivers or for input sense for diagnostic modes.
13	11	OEN	Output Enable. The active-low pin OEN signal can always enable output drivers to sink current independent of the AS1109 mode. 0 = Output drivers are enabled. 1 = Output drivers are disabled.
14	12	SDO	Serial Data Output. In normal mode SDO is clocked out 8.5 clock cycles after SDI is clocked in. In global error detection mode this pin indicates the occurrence of a global error. 0 = Global error mode returned an error. 1 = No errors.
15	13	REXT	External Resistor Connection. This pin connects through the external resistor (REXT) to GND, to setup the load current.
16	14	VDD	Positive Supply Voltage

5 Absolute Maximum Ratings

Stresses beyond those listed in Table 2 may cause permanent damage to the device. These are stress ratings only, and functional operation of the device at these or any other conditions beyond those indicated in Electrical Characteristics on page 4 is not implied. Exposure to absolute maximum rating conditions for extended periods may affect device reliability.

Table 2. Absolute Maximum Ratings

Parameter		Min	Max	Units	Comments
Electrical Parameters					
VDD to GND		-0.3	7	V	
Input Voltage		-0.4	VDD + 0.4	V	
Output Voltage		-0.4	15	V	
GND Pin Current			1000	mA	
Input Current (latch-up immunity)		-100	100	mA	Norm: JEDEC 78
Electrostatic Discharge					
Electrostatic Discharge HBM		2		kV	Norm: MIL 883 E method 3015
Temperature Ranges and Storage Conditions					
Thermal Resistance ΘJA		33		ºC/W	on PCB, 16-pin SOIC-150 package
		113		ºC/W	on PCB, 16-pin QSOP-150 package
		32		ºC/W	on PCB, 16-pin QFN (4x4mm) package
Storage Temperature Range		-55	+150	ºC	
Package Body Temperature			+260	ºC	The reflow peak soldering temperature (body temperature) specified is in accordance with *IPC/ JEDEC J-STD-020"Moisture/Reflow Sensitivity Classification for Non-Hermetic Solid State Surface Mount Devices".* The lead finish for Pb-free leaded packages is matte tin (100% Sn).
Humidity non-condensing		5	85	%	
Moisture Sensitive Level	QFN and QSOP	1			Represents a maximum floor life time of unlimited
	Moisture Sensitive Layer (SOIC)	3			Represents a maximum floor life of 168h

6 Electrical Characteristics

V_{DD} = +3.0V to +5.5V, Typical values measured at V_{DD} = 5V, T_{AMB} = 25°C (unless otherwise specified).

Table 3. Electrical Characteristics

Symbol	Parameter		Condition	Min	Typ	Max	Unit
T_{AMB}	Operating Temperature Range		Device fully functional up to 125°C	-40		+85	°C
V_{DD}	Supply Voltage			3.0		5.5	V
V_{DS}	Output Voltage		OUTN0:7	0		15.0	V
I_{OUT}	Output Current		OUTN0:7, V_{DD} = 5V (see Figure 8)	0.5		100	mA
I_{OH}			SDO	-1.0			
I_{OL}			SDO	1.0			
V_{IH}	Input Voltage	High Level	CLK, OEN, LD, SDI	0.7 x V_{DD}		V_{DD} + 0.3	V
V_{IL}		Low Level		-0.3		0.3 x V_{DD}	
$I_{DS(OFF)}$	Output Leakage Current		OEN = 1, V_{DS} = 15.0V			0.5	µA
V_{OL}	Output Voltage	SDO	I_{OL} = +1.0mA			0.4	V
V_{OH}			I_{OH} = -1.0mA	V_{DD} - 0.4V			
$I_{AV(LC1)}$	Device-to-Device Average Output Current from OUTN0 to OUTN7		V_{DS} = 0.5V, V_{DD} = Const., R_{EXT} = 744Ω	24.5	25.26	26	mA
$\Delta I_{AV(LC1)}$	Current Skew (Between Channels)		$V_{DS} \geq$ 0.5V, V_{DD} = Const., R_{EXT} = 744Ω		±0.9	±3	%
$I_{AV(LC2)}$	Device-to-Device Average Output Current from OUTN0 to OUTN7		V_{DS} = 0.6V, V_{DD} > 3.3V, R_{EXT} = 372Ω	49.50	50.52	51.55	mA
$\Delta I_{AV(LC2)}$	Current Skew (Between Channels)		$V_{DS} \geq$ 0.6V, V_{DD} = Const., R_{EXT} = 372Ω		±0.8	±2	%
$I_{AV(LC3)}$	Device-to-Device Average Output Current from OUTN0 to OUTN7		V_{DS} = 0.8V, V_{DD} = 5.0V, R_{EXT} = 186Ω	98	101	104	mA
$\Delta I_{AV(LC3)}$	Current Skew (Between Channels)		$V_{DS} \geq$ 0.8V, V_{DD} = Const., R_{EXT} = 186Ω		±0.5	±2	%
I_{LC}	Low-Current Diagnosis Mode		V_{DS} = 0.8V, V_{DD} = 5.0V	0.4	0.6	0.8	mA
I_{PD}	Power Down Supply Current		V_{DS} = 0.8V, V_{DD} = 5.0V, R_{EXT} = 372Ω, OUTN0:7 = On		3	20	µA
%/ΔV_{DS}	Output Current vs. Output Voltage Regulation		V_{DS} within 1.0 and 3.0V		±0.1		%/V
%/ΔV_{DD}	Output Current vs. Supply Voltage Regulation		V_{DD} within 3.0 and 5.0V		±1		%/V
$R_{IN(UP)}$	Pullup Resistance		OEN	250	500	800	kΩ
$R_{IN(DOWN)}$	Pulldown Resistance		LD	250	500	800	kΩ
V_{THL}*	Open Error Detection Threshold Voltage		No load	0.25	0.35	0.45	V
V_{THH}*	Short Error Detection Threshold Voltage		V_{DD} = 3.0V, no load	1.2	1.3	1.4	V
			V_{DD} = 5.0V, no load	2.0	2.2	2.4	
T_{OV1}	Overtemperature Threshold Flag				150		ºC

Table 3. Electrical Characteristics (Continued)

Symbol	Parameter		Condition	Min	Typ	Max	Unit
$I_{DD(OFF)0}$	Supply Current	Off	R_{EXT} = Open, OUTN0:7 = Off		1.3	2	mA
$I_{DD(OFF)1}$			R_{EXT} = 744Ω, OUTN0:7 = Off		3.0	3.68	
$I_{DD(OFF)2}$			R_{EXT} = 372Ω, OUTN0:7 = Off		4.7	5.37	
$I_{DD(OFF)3}$			R_{EXT} = 186Ω, OUTN0:7 = Off		8.1	8.73	
$I_{DD(ON)1}$		On	R_{EXT} = 744Ω, OUTN0:7 = On		4.5	5	
$I_{DD(ON)2}$			R_{EXT} = 372Ω, OUTN0:7 = On		7.5	8	
$I_{DD(ON)3}$			R_{EXT} = 186Ω, OUTN0:7 = On		13.7	15	

6.1 Switching Characteristics

V_{DD} = 3.0 to 5.5V, V_{DS} = 0.8V, V_{IH} = V_{DD}, V_{IL} = GND, R_{EXT} = 372Ω, V_{LOAD} = 4.0V, R_{LOAD} = 64Ω, C_{LOAD} = 10pF; guaranteed by design.

Table 4. Switching Characteristics

Symbol	Parameter	Conditions	Min	Typ	Max	Unit
t_{P1}	Propagation Delay Time	CLK - SDO		5	10	ns
t_{P2}	Propagation Delay Time (Without Staggered Output Delay)	LD - OUTN*n*		100	200	
t_{P3}		OEN - OUTN*n*		100	200	
t_{P4}	Propagation Delay Time				10	ns
$t_{W(CLK)}$	Pulse Width	CLK	15			ns
$t_{W(L)}$		LD	15			
$t_{W(OE)}$		OEN (@I_{OUT} < 60mA)	200			
t_R *	Maximum CLK Rise Time				500	ns
t_F *	Maximum CLK Fall Time				500	ns
t_{OR}	Output Rise Time of V_{OUT} (Turn Off)			100	200	ns
t_{OF}	Output Fall Time of V_{OUT} (Turn On)			100	300	ns
$t_{SU(D)}$	Setup Time for SDI		5			ns
$t_{H(D)}$	Hold Time for SDI		5			ns
$t_{SU(L)}$	Setup Time for LD		5			ns
$t_{H(L)}$	Hold Time for LD		5			ns
$t_{TESTING}$	Minimum OEN Time for Error Detection		2000			ns
t_{STAG}	Staggered Output Delay			20	40	ns
$t_{SU(OE)}$	Output Enable Setup Time		20			ns
$t_{GSW(ERROR)}$	Global Error Switching Setup Time		10			ns
$t_{SU(ERROR)}$	Global Error Detection Setup Time		10			ns
$t_{P(I/O)}$	Propagation Delay Global Error Flag				5	ns
$t_{SW(ERROR)}$	Switching Time Global Error Flag				10	ns
f_{CLK}	Maximum Clock Frequency (Cascade Operation)		30	50		MHz
$t_{P3,ON}$	Low-Current Test Mode Propagation Delay Time	Turn ON		3	5	µs
$t_{TP3,OFF}$		Turn OFF		0.05	0.1	µs
$t_{REXT2,1}$	External Resistor Reaction Time	Change from R_{EXT1} = 372Ω, I_{OUT1} = 50.52mA to R_{EXT2} = 37.2kΩ, I_{OUT2} < 1mA		0.5	1	µs
$t_{REXT2,1}$	External Resistor Reaction Time	Change from R_{EXT1} = 37.2kΩ, I_{OUT1} = 0.5mA to R_{EXT2} = 372Ω, I_{OUT2} > 25mA		0.5	1	µs

* If multiple AS1109 devices are cascaded and t_r or t_f is large, it may be critical to achieve the timing required for data transfer between two cascaded LED drivers.

Note: All limits are guaranteed. The parameters with min and max values are guaranteed with production tests or SQC (Statistical Quality Control) methods.

7 Typical Operating Characteristics

Figure 3. Output Current vs. REXT, VDD = 5V; VOUT = 0.8V, TAMB = 25°C

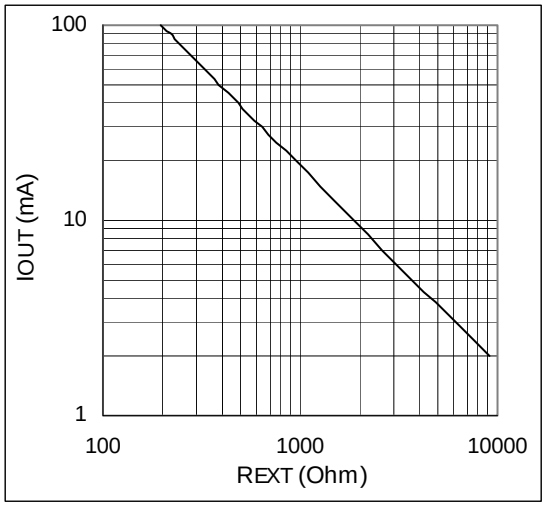

Figure 4. Relative Output Current Error vs. VDD, Iout/Iout@VDD = 5V - 1, TAMB = 25°C

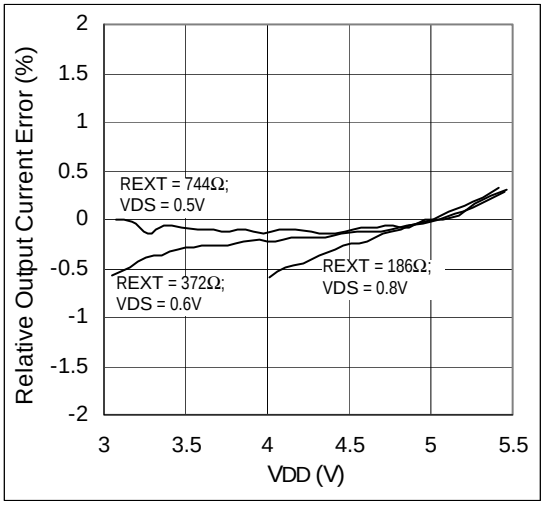

Figure 5. Output Current vs. VDS; VDD = 5V, TAMB = 25°C

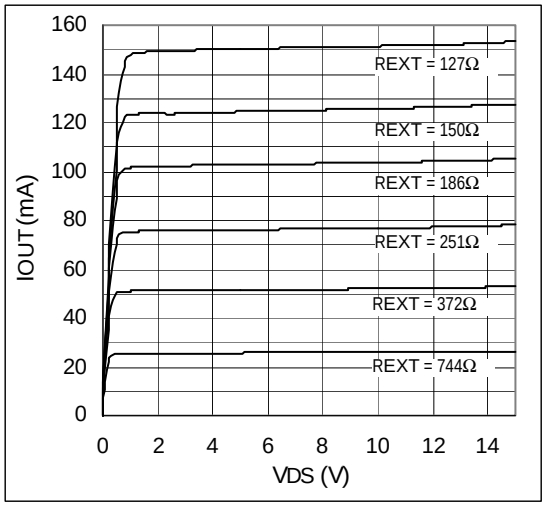

Figure 6. Output Current vs. VDS; VDD = 5V, TAMB = 25°C

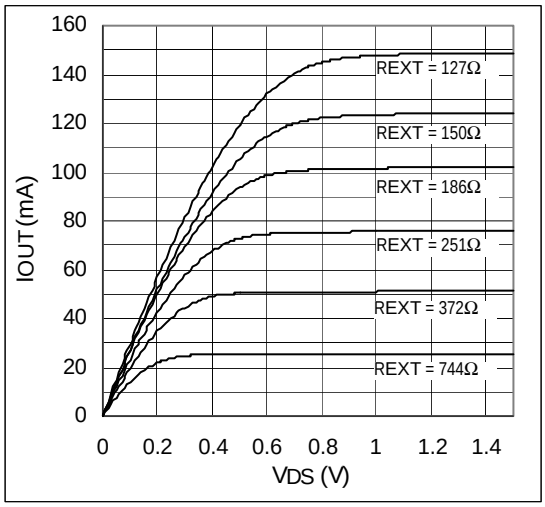

Figure 7. Relative IOUT Error vs. Temperature VDD = 5V, Iout/Iout@25°C - 1, TAMB = 25°C

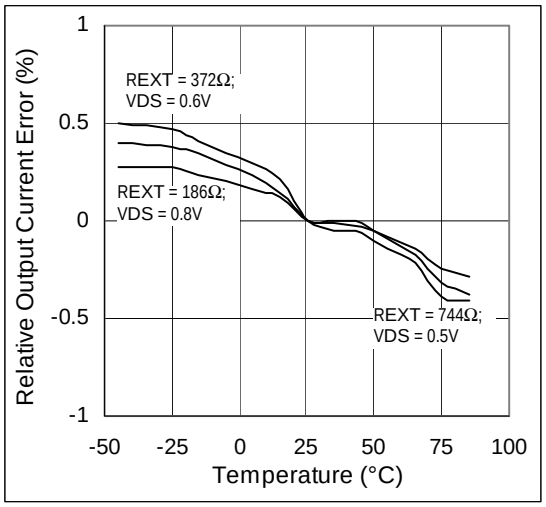

Figure 8. Output Current vs. VDD

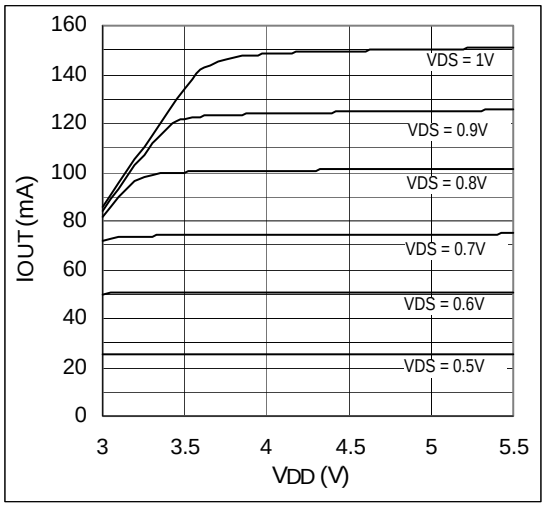

8 Detailed Description

The AS1109 is designed to drive up to 8 LEDs through a fast serial interface and 8 constant-current output drivers. Furthermore, the AS1109 provides diagnostics for detecting open- or shorted-LEDs, as well as over-temperature conditions for LED display systems, especially LED traffic sign applications.

The AS1109 contains an 8-bit shift register and an 8-bit data register, which convert serial input data into parallel output format. At AS1109 output stages, eight regulated current sinks are designed to provide uniform and constant current with excellent matching between ports for driving LEDs within a wide range of forward voltage variations. External output current is adjustable from 0.5 to 100mA using an external resistor for flexibility in controlling the brightness intensity of LEDs. The AS1109 guarantees to endure 15V maximum at the outputs.

The serial interface is capable of operating at a minimum of 30 MHz, satisfying the requirements of high-volume data transmission.

Using a multiplexed input/output technique, the AS1109 adds additional functionality to pins SDO, LD and OEN. These pins provide highly useful functions (open- and shorted-LED detection, over-temperature detection), thus reducing pin count. Over-temperature detection will work on-the-run, whereas the open- and shorted-LED detection can be used on-the-run or in low-current diagnostic mode (see page 14).

Figure 9. AS1109 - Block Diagram

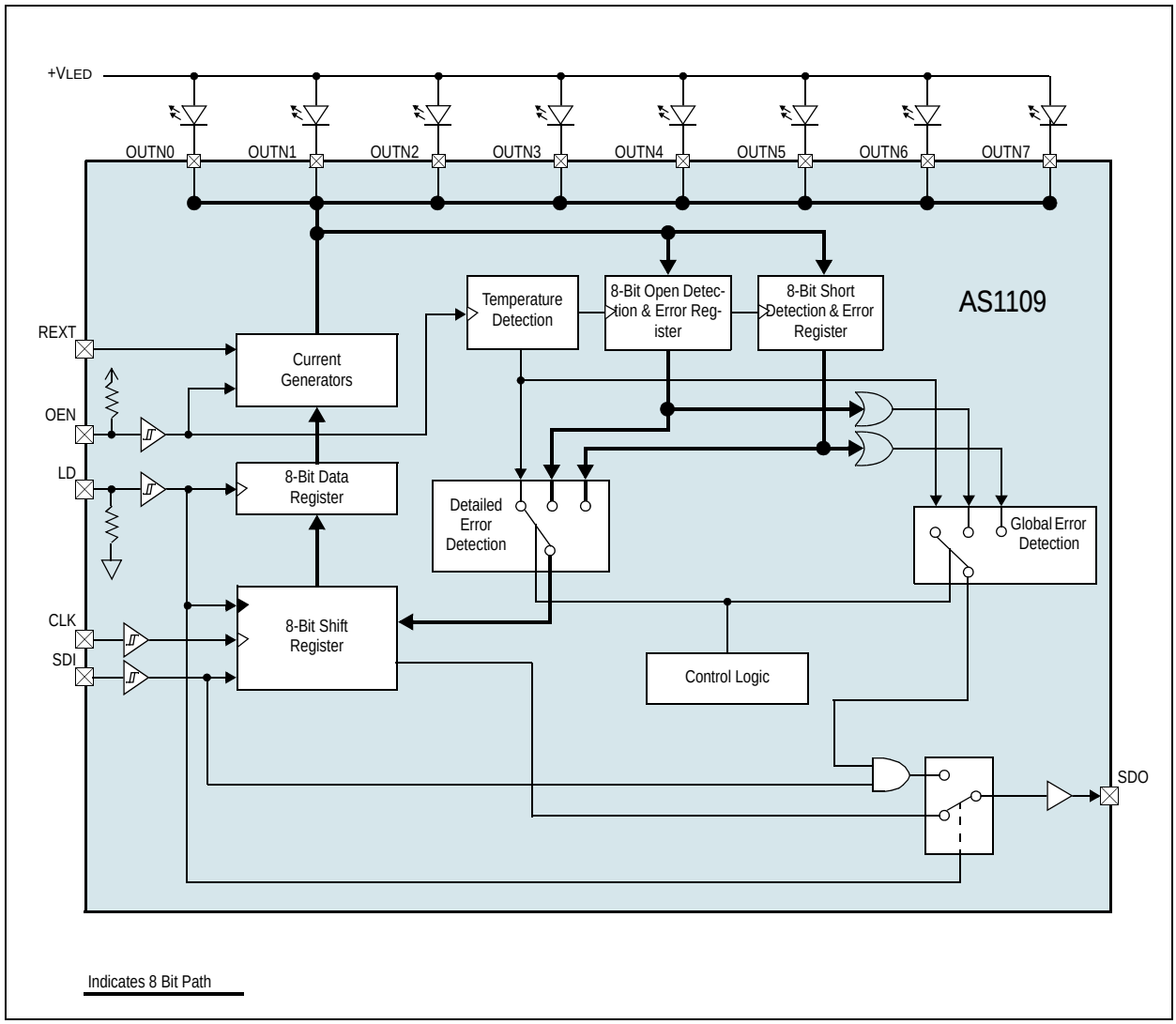

8.1 Serial Interface

Data accesses are made serially via pins SDI and SDO. At each CLK rising edge, the signal present at pin SDI is shifted into the first bit of the internal shift register and the other bits are shifted ahead of the first bit. The MSB is the first bit to be clocked in. In error-detection mode the shift register will latch-in the corresponding error data of temperature-, open-, and short-error register with each falling edge of LD.

The 8-bit data register will latch the data of the shift register at each rising edge of LD. This data is then used to drive the current generator output drivers to switch on the corresponding LEDs as OEN goes low.

8.2 Timing Diagrams

This section contains timing diagrams referenced in other sections of this data sheet.

Figure 10. Normal Mode Timing Diagram

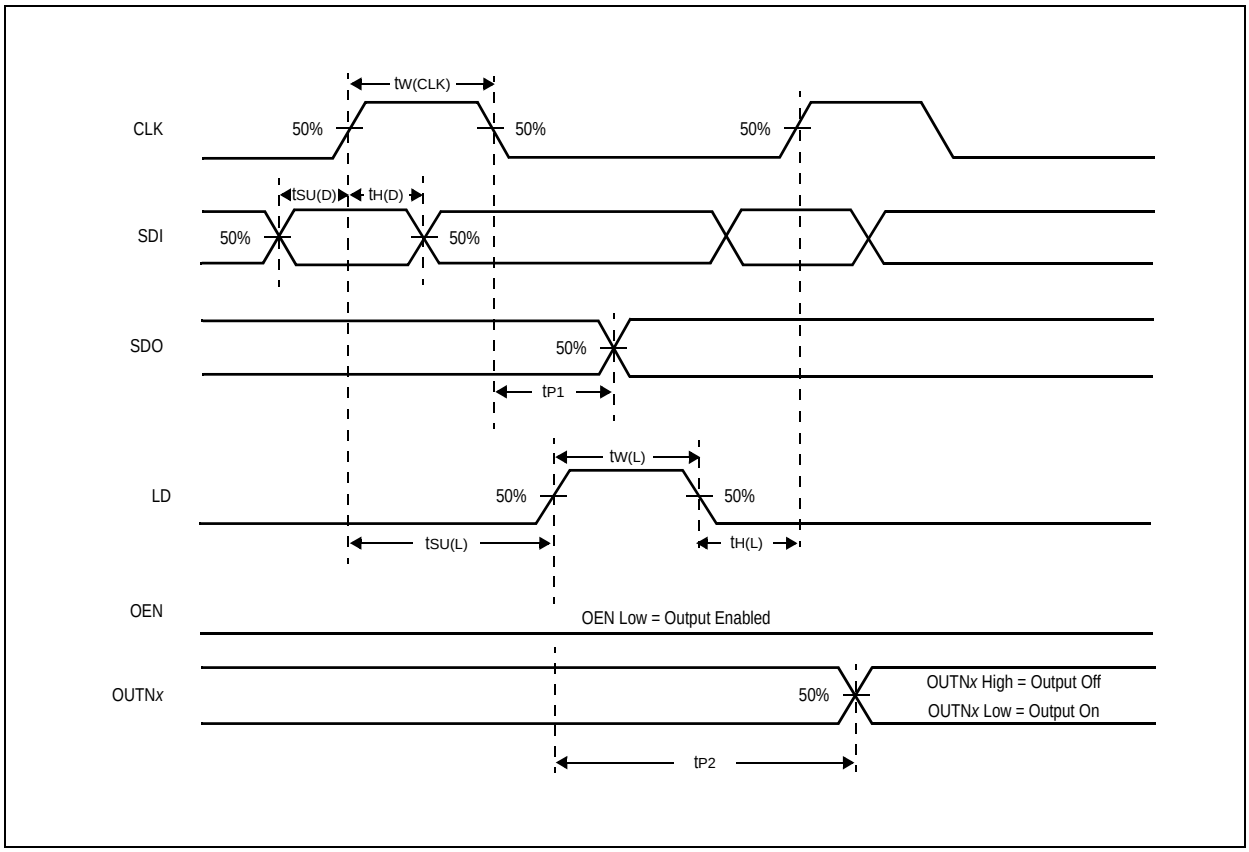

Figure 11. Output Delay Timing Diagram

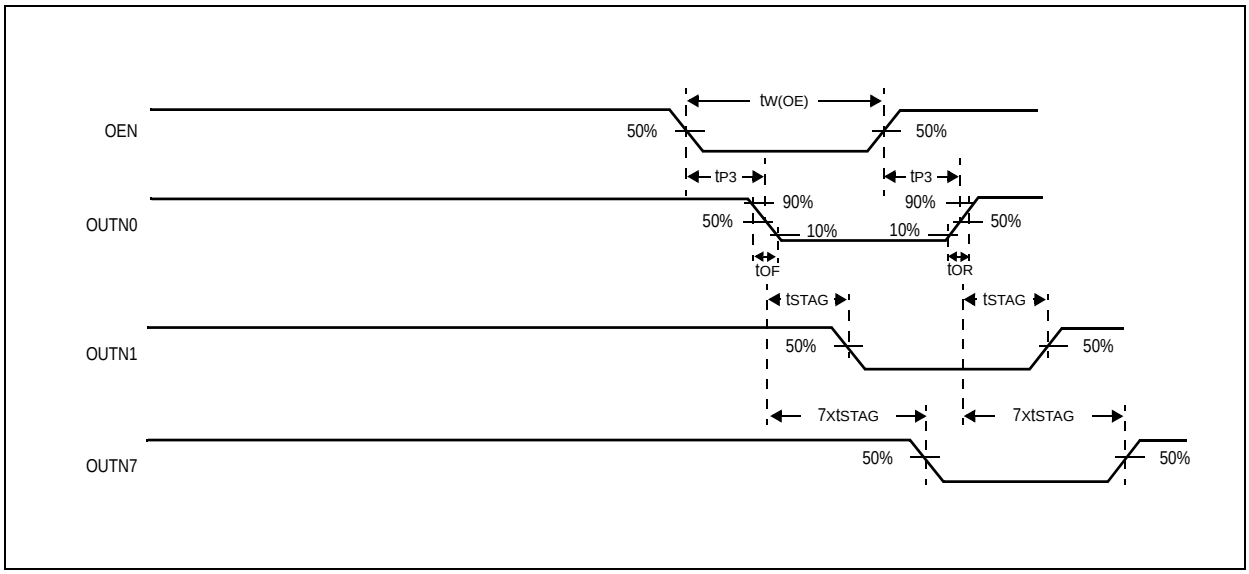

Figure 12. Data Input Timing Diagram

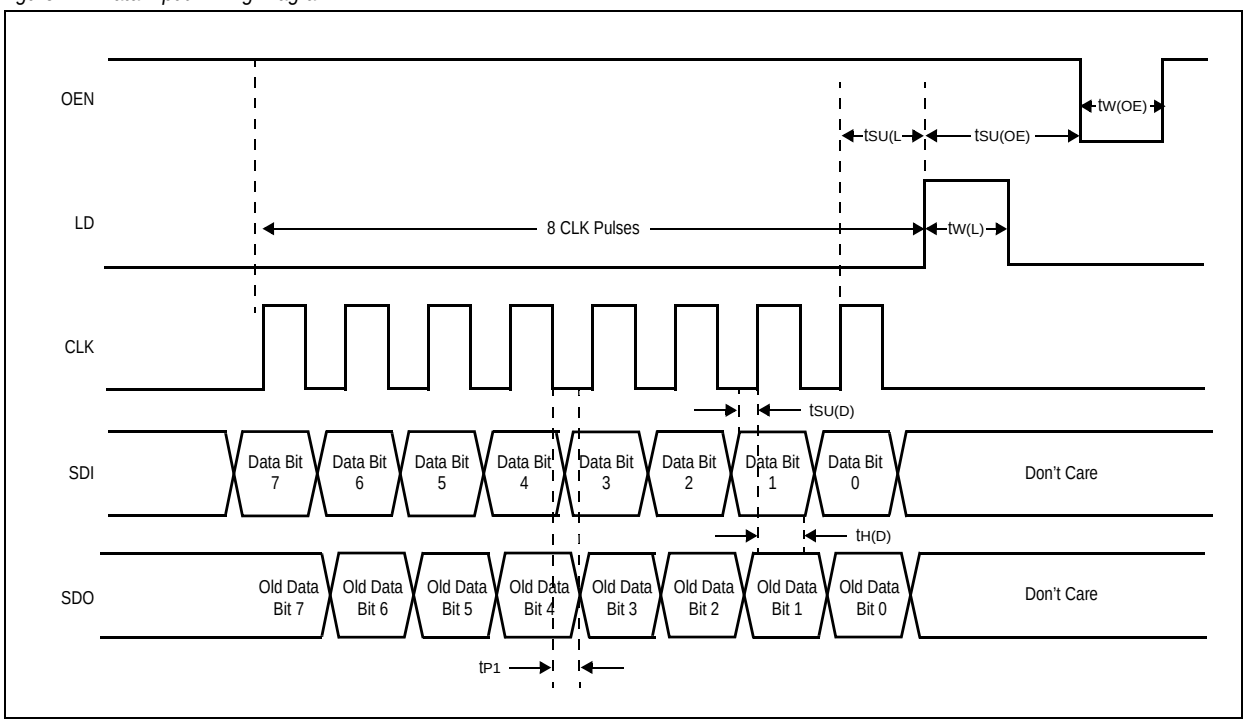

Figure 13. Data Input Example Timing Diagram

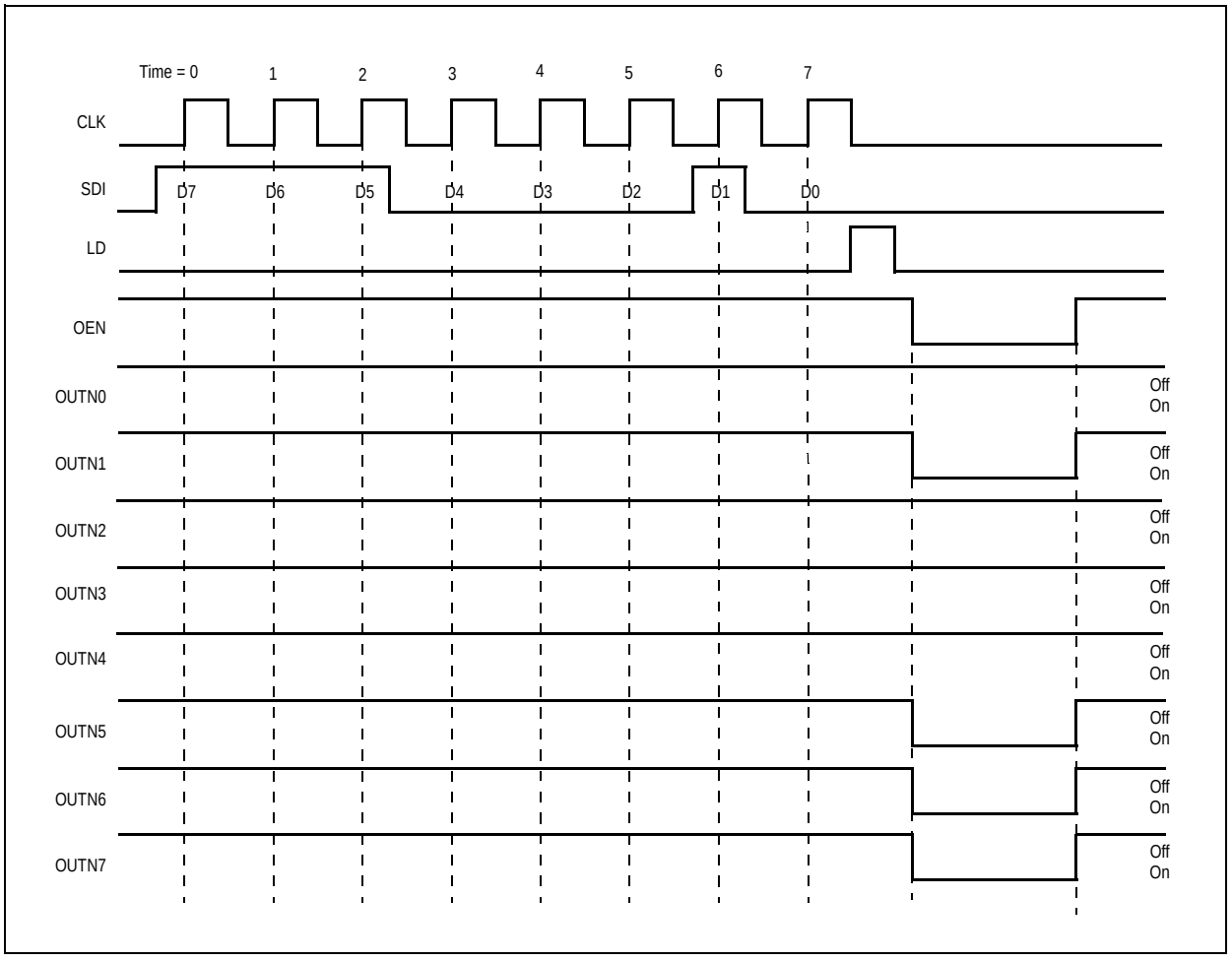

Figure 14. Switching Global Error Mode Timing Diagram

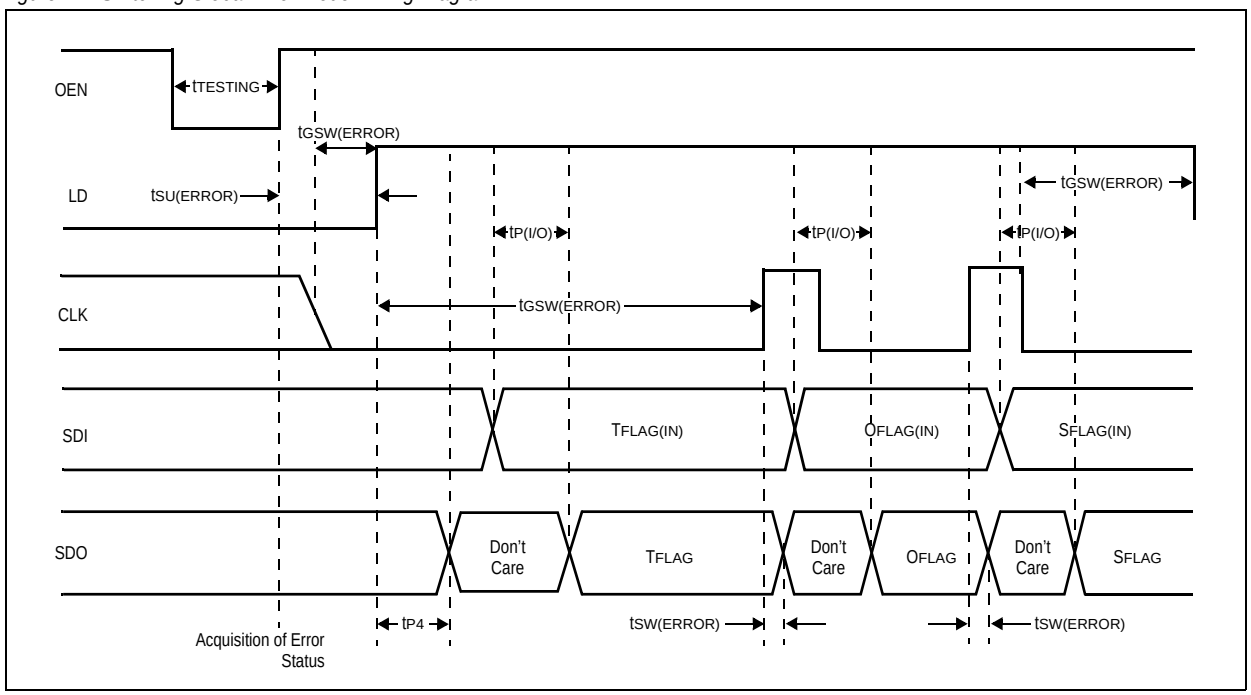

8.3 Error-Detection Mode

Acquisition of the error status occurs at the rising edge of OEN. Error-detection mode is started on the rising edge of LD when OEN is high. The CLK signal must be low when entering error detection mode. Error detection for open- and shorted-LEDs can only be performed for LEDs that are switched on during test time. To switch between error-detection modes clock pulses are needed (see Table 5).

Note: To test all LEDs, a test pattern that turns on all LEDs must be input to the AS1109.

8.4 Global Error Mode

Global error mode is entered when error-detection mode is started. Clock pulses during this period are used to select between temperature, open-LED, and shorted-LED tests, as well as low-current diagnostic mode and shutdown mode (see Table 5). In global error mode, an error flag (TFLAG, OFLAG, SFLAG) is delivered to pin SDO if any errors are encountered.

Table 5. Global Error Mode Selections

Clock Pulses	Output Port	Error-Detection Mode	Global Error Flag/Shutdown Condition
0	Don't Care	Over-Temperature Detection	TFLAG = SDO = 1: No over-temperature warning. TFLAG = SDO = 0: Over-temperature warning.
1	Enabled	Open-LED Detection	OFLAG = SDO = 1: No open-LED error. OFLAG = SDO = 0: Open-LED error.
2	Enabled	Shorted-LED Detection	SFLAG = SDO = 1: No shorted-LED error. SFLAG = SDO = 0: Shorted-LED error.
3	Don't Care	Low-Current Diagnostic Mode	
4	Don't Care	Shutdown Mode	SDI = 1: Wakeup SDI = 0: Shutdown

Note: For a valid result SDI must be 1 for the first device.

If there are multiple AS1109s in a chain, the error flag will be gated through all devices. To get a valid result at the end of the chain, a logic 1 must be applied to the SDI input of the first device of the chain. If one device produces an error this error will show up after *n**tP(I/O) + tSW(ERROR) at pin SDO of the last device in the chain. This means it is not possible to identify which device in the chain produced the error. Therefore, if a global error occurs, the detailed error report can be run to identify which AS1109, or LED produced the error.

Note: When no error has occurred, the detailed error report can be skipped, setting LD and subsequently OEN low.

8.5 Error Detection Functions

8.5.1 Open-LED Detection

The AS1109 open-LED detection is based on the comparison between V_{DS} and V_{THL}. The open LED status is aquired at the rising edge of OEN and stored internally. While detecting open-LEDs the output port must be turned on. Open LED detection can be started with 1 clock pulse during error detection mode while the output port is turned on.

Note: LEDs which are turned off at test time cannot be tested.

Table 6. Open LED Detection Modes

Output Port State	Effective Output Point Conditions	Detected Open-LED Error Status Code	Meaning
On	$V_{DS} < V_{THL}$	0	Open Circuit
On	$V_{DS} > V_{THL}$	1	Normal

8.5.2 Shorted-LED

The AS1109 shorted-LED detection is based on the comparison between V_{DS} and V_{THH}. The shortened LED status is acquired at the rising edge of OEN and stored internally. While detecting shorted-LEDs the output port must be turned on. Shorted-LED detection can be started with 2 clock pulses during error detection mode while the output port is turned on.

For valid results, the voltage at OUTN0:OUTN7 must be lower then V_{THH} under low-current diagnostic mode operating conditions. This can be achieved by reducing the V_{LED} voltage or by adding additional diodes, resistors or LED's.

Note: LEDs which are turned off at test time cannot be tested.

Table 7. Shorted LED Detection Modes

Output Port State	Effective Output Point Conditions	Detected Shorted-LED Error Status Code	Meaning
On	$V_{DS} > V_{THH}$	0	Short Circuit
On	$V_{DS} < V_{THH}$	1	Normal

8.5.3 Overtemperature

Thermal protection for the AS1109 is provided by continuously monitoring the device's core temperature. The overtemperature status is aquired at the rising edge of OEN and stored internally.

Table 8. Overtemperature Modes

Output Port State	Effective Output Point Conditions	Detected Overtemperature Status Code	Meaning
Don't Care	Temperature > T_{OV1}	0	Overtemperature Condition
Don't Care	Temperature < T_{OV1}	1	Normal

8.6 Detailed Error Reports

The detailed error report can be read out after global error mode has been run. On the falling edge of LD, the detailed error report of the selected test is latched into the shift register and can be clocked out with *n**8 clock cycles (*n* is the number of AS1109s in a chain) via pin SDO. At the same time new data can be written into the shift register, which will load on the next rising edge of pin LD. This data will show at the output drivers, at the falling edge of OEN.

8.6.1 Detailed Temperature Warning Report

The detailed temperature warning report can be read out immediately after global error mode has been run. Bit0 of the 8bit data word represents the temperature flag of the chip.

Figure 15. Detailed Temperature Warning Report Timing Diagram

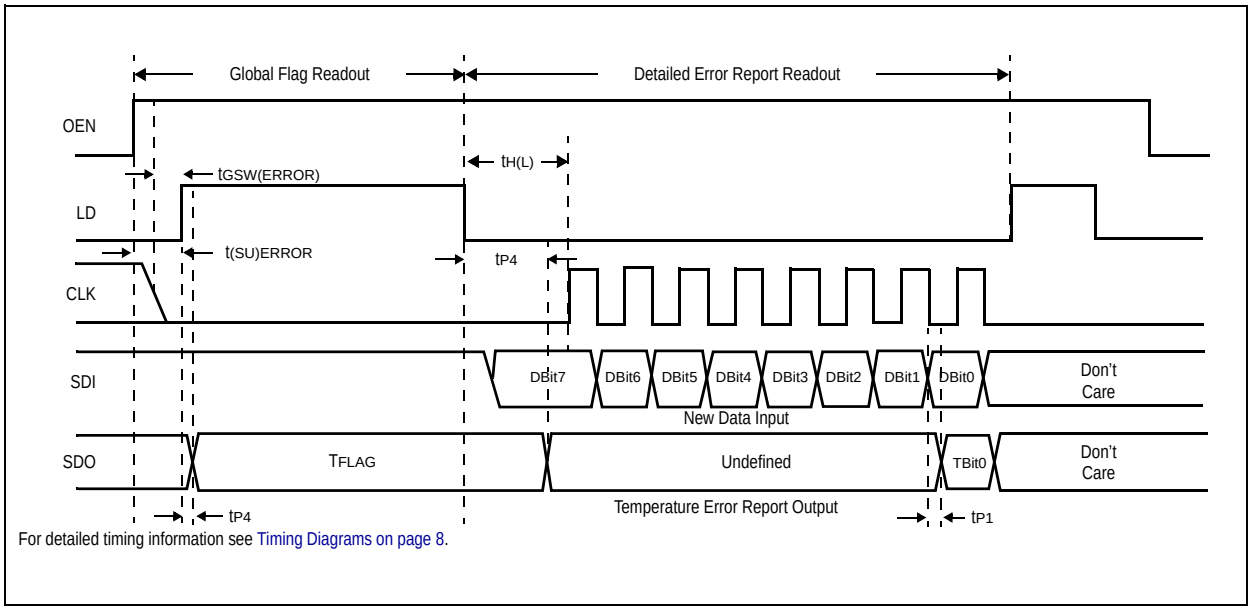

Detailed Temperature Warning Report Example

Consider a case where five AS1109s are cascaded in one chain. The detailed error report lists the temperatures for each device in the chain:

IC1:[70°] IC2:[85°] IC3:[66°] IC4:[160°] IC5:[76°]

In this case, IC4 is overheated and will generate a global error, and therefore 5*8 clock cycles are needed to write out the detailed temperature warning report, and optionally read in new data. The detailed temperature warning report would look like this:

XXXXXXX1 XXXXXXX1 XXXXXXX1 XXXXXXX0 XXXXXXX1

The 0 in the detailed temperature warning report indicates that IC4 is the device with the over-temperature condition.

Note: In an actual report there are no spaces in the output.

8.6.2 Detailed Open-LED Error Report

The detailed open-LED error report can be read out immediately after global error mode has been run.

Figure 16. Detailed Open-LED Error Report Timing Diagram

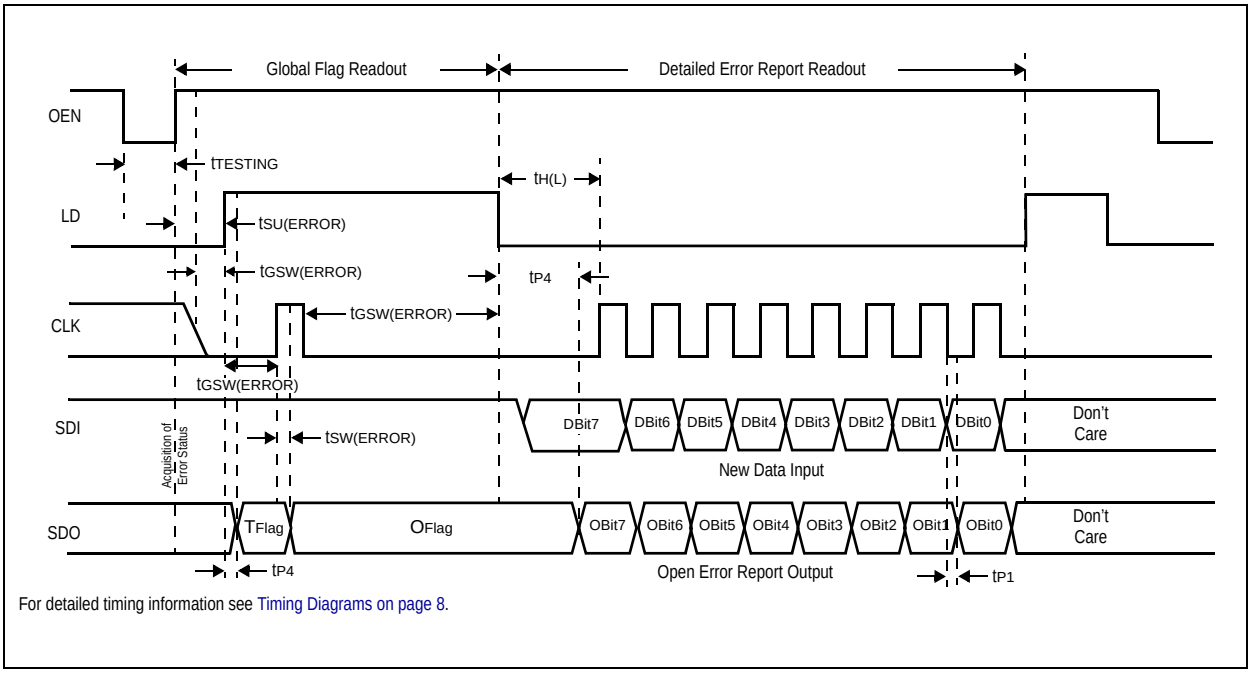

For detailed timing information see Timing Diagrams on page 8.

Detailed Open-LED Error Report Example

Consider a case where five AS1109s are cascaded in one chain. A 1 indicates a LED is on, a 0 indicates a LED is off, and an X indicates an open LED. The open-LED test is only applied to LEDs that are turned on. This test is used with a test pattern where all LEDs are on at test time.

IC1:[11111111] IC2:[111XX111] IC3:[11111111] IC4:[1X111111] IC5:[11111111]

IC2 has two open LEDs and IC4 has one open LED switched on due to input. 5*8 clock cycles are needed to write the entire error code out. The detailed error report would look like this:

Input Data:	1 1 1 1 1 1 1 1	1 1 1 1 1 1 1 1	1 1 1 1 1 1 1 1	1 1 1 1 1 1 1 1	1 1 1 1 1 1 1 1
LED Status:	1 1 1 1 1 1 1 1	1 1 1 X X 1 1 1	1 1 1 1 1 1 1 1	1 X 1 1 1 1 1 1	1 1 1 1 1 1 1 1
Failure Code:	1 1 1 1 1 1 1 1	1 1 1 0 0 1 1 1	1 1 1 1 1 1 1 1	1 0 1 1 1 1 1 1	1 1 1 1 1 1 1 1

Comparing this report with the input data indicates that IC2 is the device with two open LEDs at position 4 and 5 and IC4 with an open LED at second position. For such a test it is recommended to enter low-current diagnostic mode first (see Low-Current Diagnostic Mode on page 14) to reduce onscreen flickering.

Note: In an actual report there are no spaces in the output.
LEDs turned off during test time cannot be tested.

8.6.3 Detailed Shorted-LED Error Report

The detailed shorted-LED error report can be read out immediately after global error mode has been run (see Global Error Mode on page 10).

Figure 17. Detailed Shorted-LED Error Report Timing Diagram

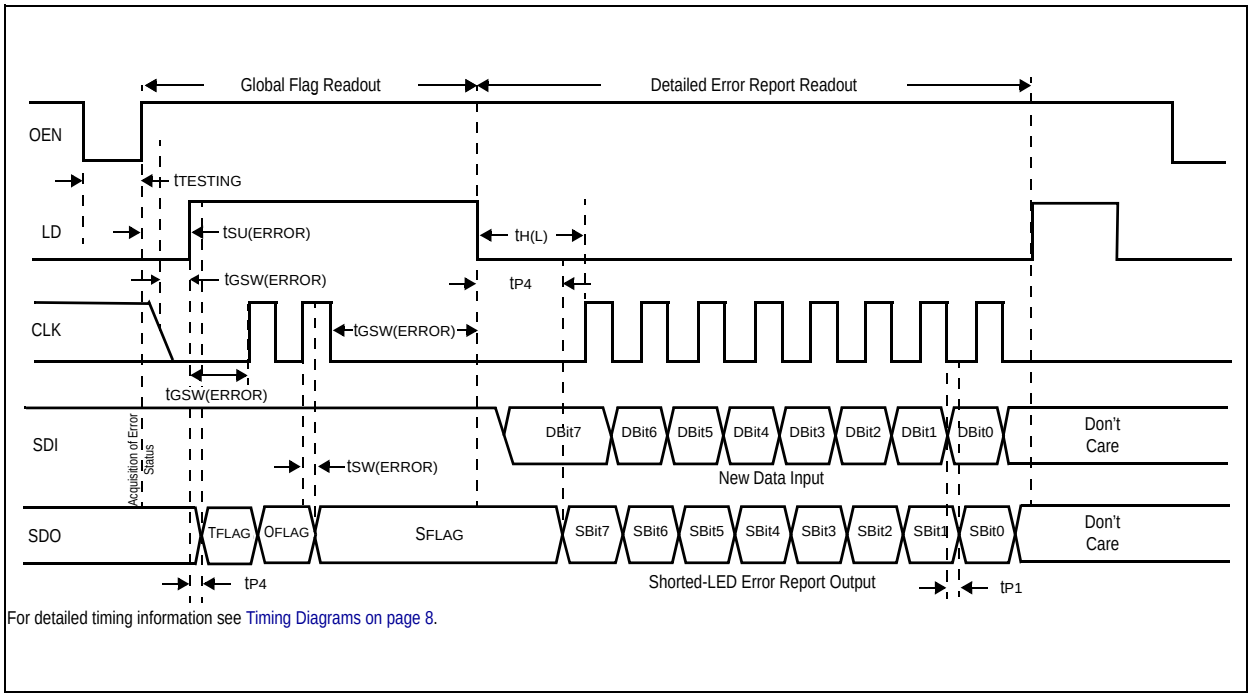

For detailed timing information see Timing Diagrams on page 8.

Detailed Shorted-LED Error Report Example

Consider a case where five AS1109s are cascaded in one chain. A 1 indicates a LED is on, a 0 indicates a LED is off, and an X indicates a shorted LED. This test is used with a test pattern where all LEDs are on at test time. Additionally, this test should be run after starting low-current diagnostic mode (see Low-Current Diagnostic Mode on page 14).

IC1:[11111XX1] IC2:[11111111] IC3:[11111111] IC4:[111X1111] IC5:[11111111]

IC2 has two shorted LEDs and IC4 has one shorted LED switched on due to input. 5*8 clock cycles are needed to write the entire error code out. The detailed error report would look like this:

Input Data:	1 1 1 1 1 1 1 1	1 1 1 1 1 1 1 1	1 1 1 1 1 1 1 1	1 1 1 1 1 1 1 1	1 1 1 1 1 1 1 1
LED Status:	1 1 1 1 1 X X 1	1 1 1 1 1 1 1 1	1 1 1 1 1 1 1 1	1 1 1 X 1 1 1 1	1 1 1 1 1 1 1 1
Failure Code:	1 1 1 1 1 0 0 1	1 1 1 1 1 1 1 1	1 1 1 1 1 1 1 1	1 1 1 0 1 1 1 1	1 1 1 1 1 1 1 1

Showing IC1 as the device with two shorted LEDs at position 6 and 7, and IC4 with one shorted LED at position 4.

Note: In an actual report there are no spaces in the output. LEDs turned off during test time cannot be tested.

8.6.4 Low-Current Diagnostic Mode

To run the open- or shorted-LED test, a test pattern must be used that will turn on each LED to be tested. This test pattern will cause a short flicker on the screen while the test is being performed. The low-current diagnostic mode can be initiated prior to running a detailed error report to reduce this on-screen flickering.

Note: Normally, displays using such a diagnosis mode require additional cables, resistors, and other components to reduce the current. The AS1109 has this current-reduction capability built-in, thereby minimizing the number of external components required.

Low-current diagnostic mode can be initiated via 3 clock pulses during error-detection mode. After the falling edge of LD, a test pattern displaying all 1s can be written to the shift register which will be used for the next error-detection test.

On the next falling edge of OEN, current is reduced to I_{LC}. With the next rising edge of OEN the current will immediately increase to normal levels and the detailed error report can be read out entering error-detection mode.

Figure 18. Switching into Low-Current Diagnostic Mode Timing Diagram

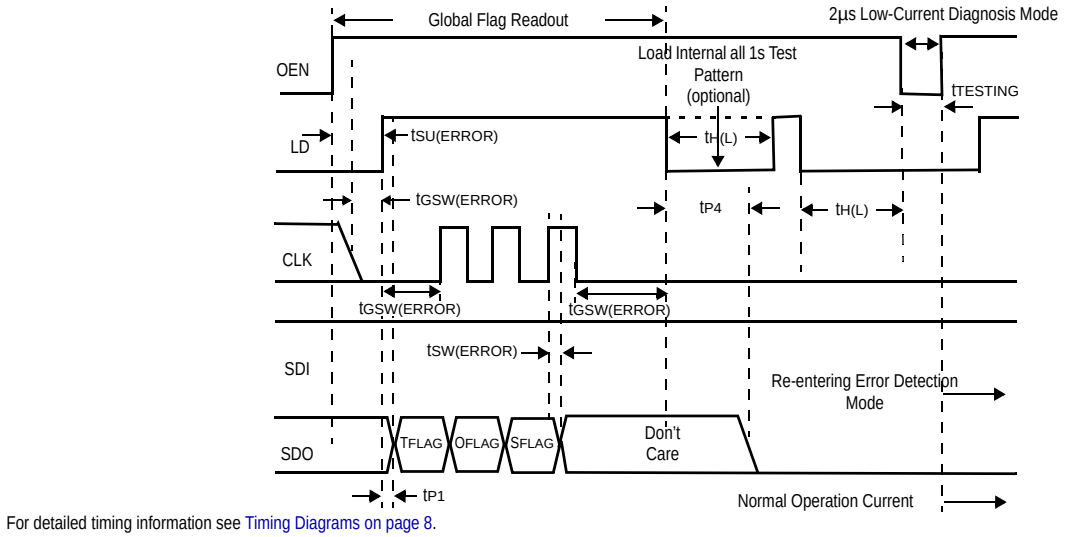

For detailed timing information see Timing Diagrams on page 8.

8.7 Shutdown Mode

The AS1109 features a shutdown mode which can be entered via 4 clock pulses during error-detection mode. To enable the shutdown mode a 0 must be placed at SDI after the rising edge of the 3rd clock pulse.

To disable shutdown mode a 1 must be placed at SDI after the 3rd clock pulse. The shutdown/wakeup information will be latched through if multiple AS1109 devices are in a chain. At the rising edge of the 4th clock pulse the shutdown bit will be read out and the AS1109 will shutdown or wakeup.

Note: In shutdown mode the supply current drops down to typically 3µA.

Figure 19. Shutdown Mode Timing Diagram

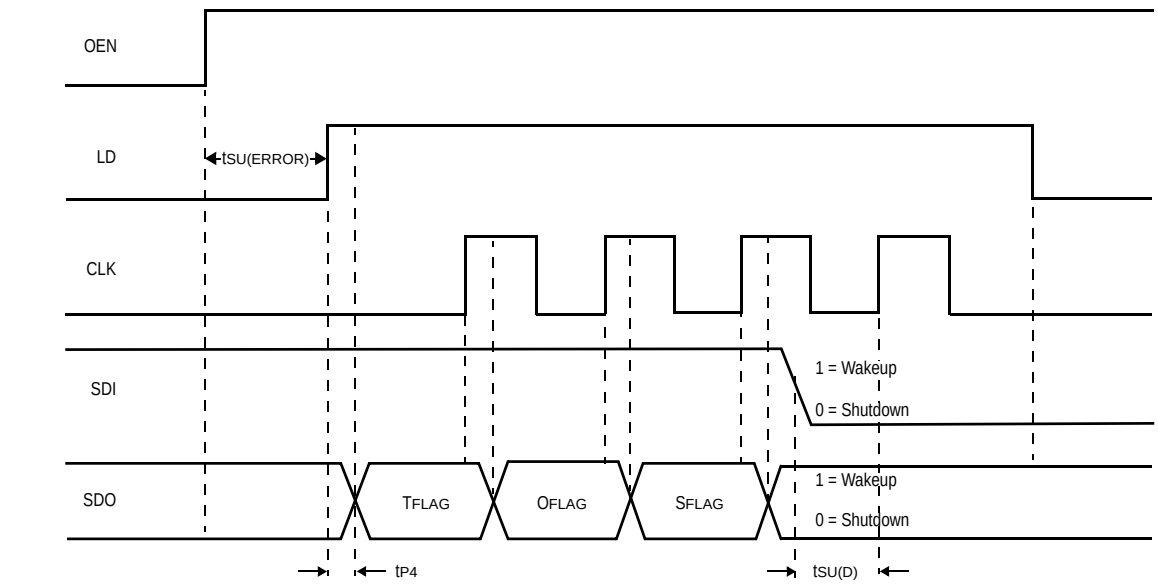

9 Application Information

9.1 Error Detection

The AS1109 features two types of error detection. The error detection can be used on-the-fly, for active LEDs, without any delay, or by entering into low-current diagnosis mode.

9.1.1 Error Detection On-The-Fly

Error detection on-the-fly will output the status of active LEDs during operation. Without choosing an error mode this will output the temperature flag at every input/output cycle. Triggering one clock pulse for open or two clock pulses for short detection during error detection mode outputs the detailed open- or short-error report with the next input/output cycle (see Figure 20). LEDs that are turned off cannot be tested and their digits at the error output must be ignored.

Figure 20. Normal Operation with Error Detection During Operation – 128 Cascaded AS1109s

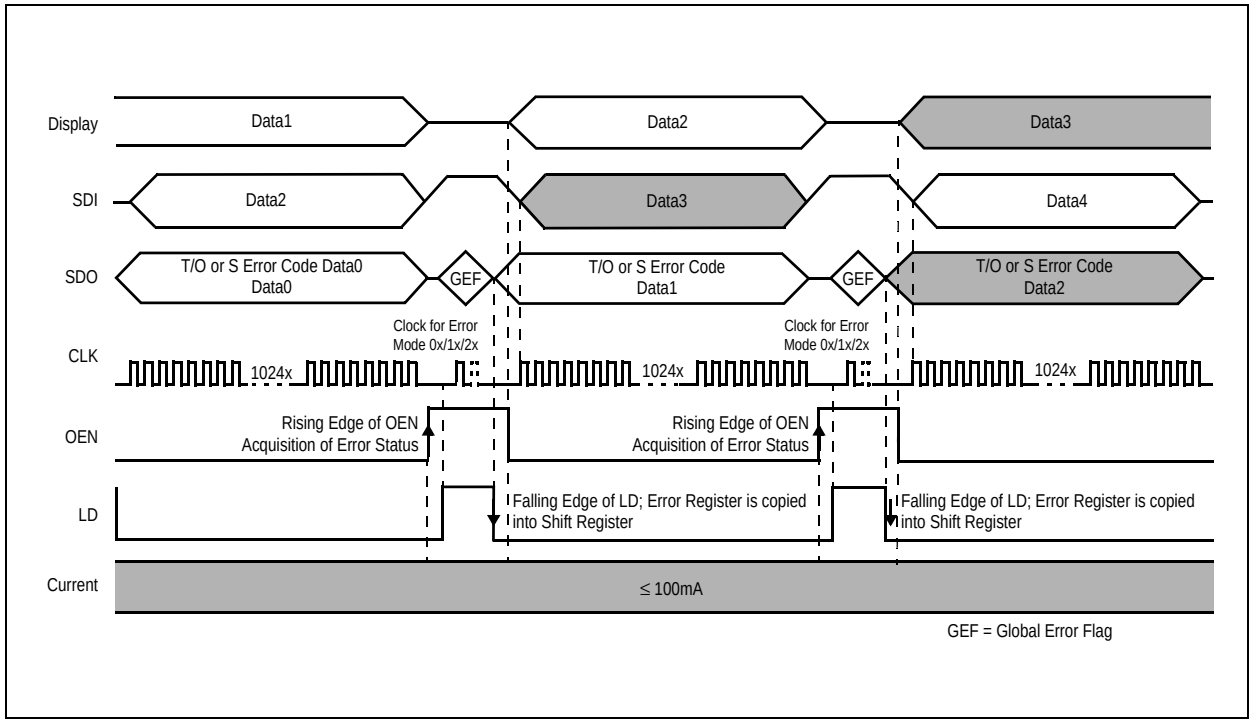

9.1.2 Error Detection with Low-Current Diagnosis Mode

This unique feature of the AS1109 uses an internal all 1s test pattern for a flicker free diagnosis of all LEDs. This error detection mode can be started anytime, and does not require any SDI input (see Figure 21).

Figure 21. Low-Current Diagnosis Mode with Internal All 1s Test Pattern – 128 Cascaded AS1109s

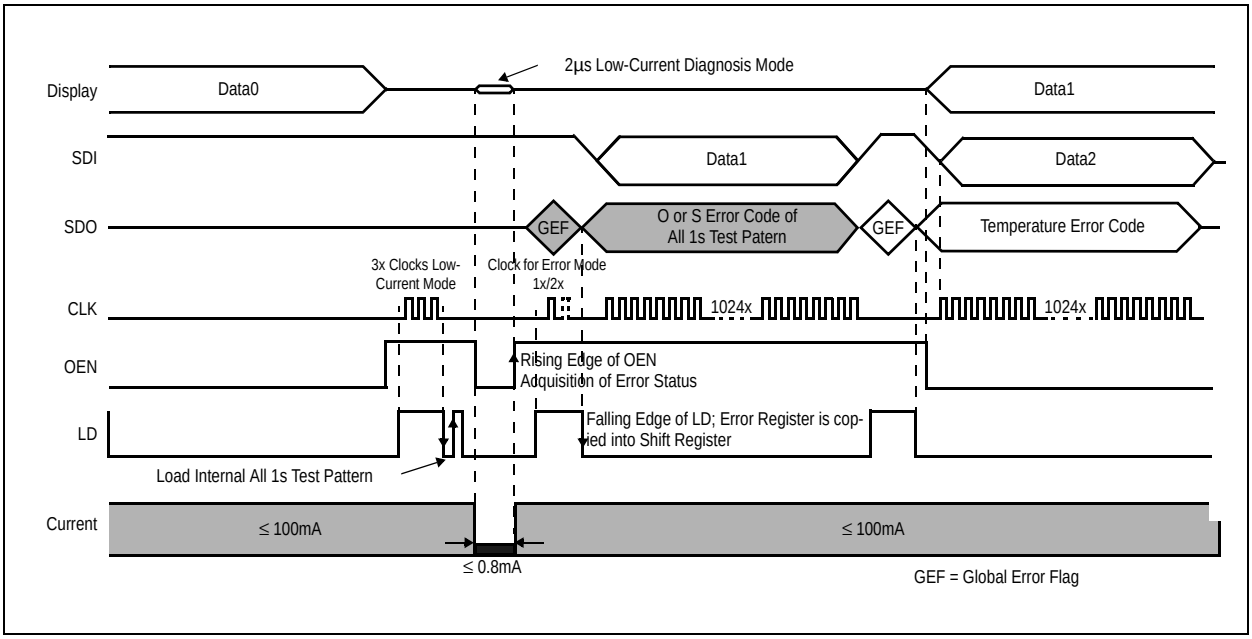

Low-current diagnosis mode is started with 3 clock pulses during error detection mode. After the three pulses of CLK, a pulse of LD loads the internal all 1s test pattern. Then OEN should be enabled for 2µs for testing. With the rising edge of OEN the test of the LEDs is stopped and while LD is high the desired error mode can be selected with the corresponding clock pulses.

With the next data input the detailed error code will be clocked out at SDO.

Note: See Figure 22 for the use of an external test pattern.

Figure 22. Low-Current Diagnosis Mode with External Test Pattern – 128 Cascaded AS1109s

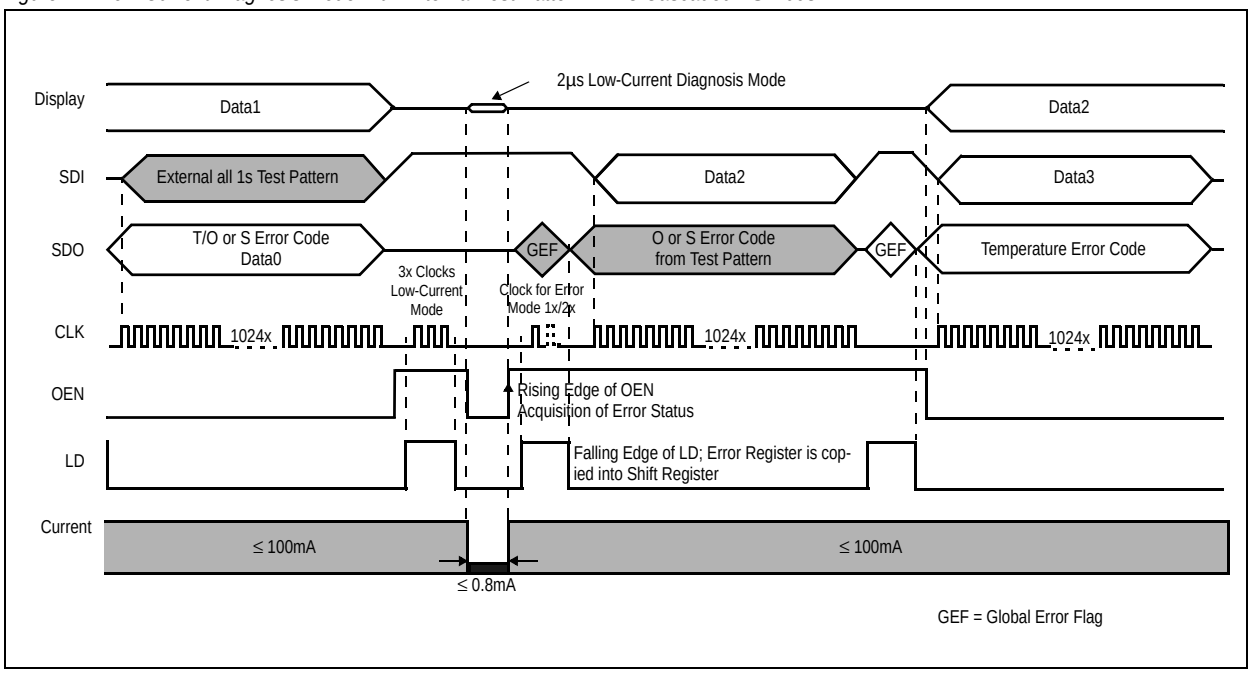

9.2 Cascading Devices

To cascade multiple AS1109 devices, pin SDO must be connected to pin SDI of the next AS1109 (see Figure 23). At each rising edge of CLK the LSB of the shift register will be written into the shift register SDI of the next AS1109 in the chain. Data at the SDI pin is clocked in at the rising edge of the CLK pulse and is clocked out at the SDO pin 8.5 clock cycles later at the falling edge of the CLK pulse.

Note: When *n**AS1109 devices are in one chain, *n**8 clock pulses are needed to latch-in the input data.

Figure 23. Cascading AS1109 Devices

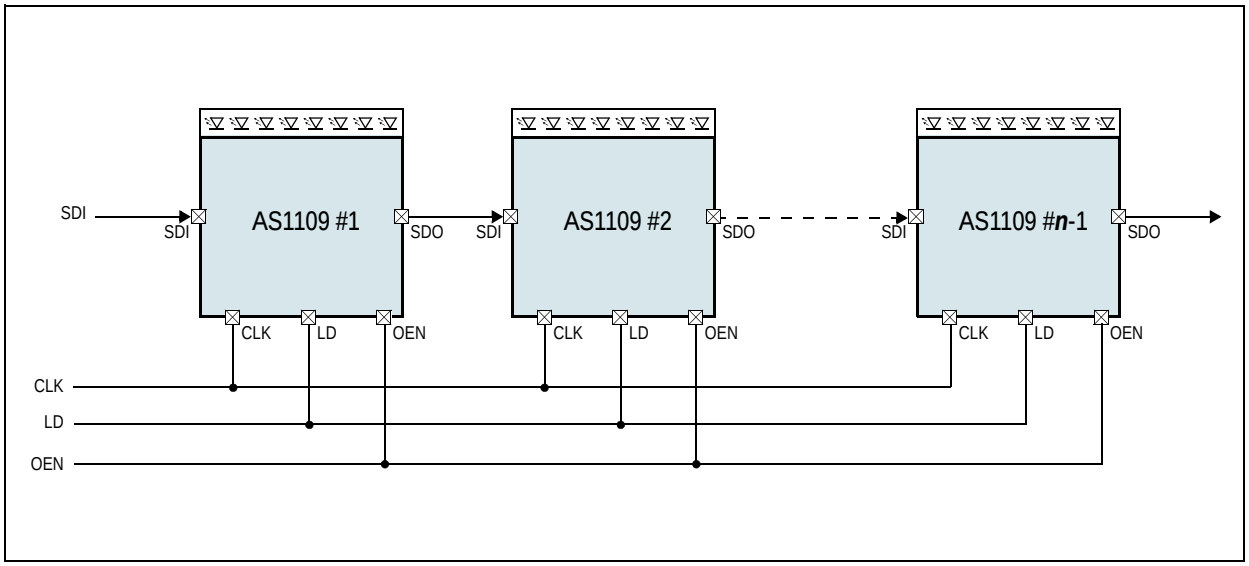

9.3 Constant Current

In LED display applications, the AS1109 provides virtually no current variations from channel-to-channel and from AS1109-to-AS1109. This is mostly due to 2 factors:

- While $I_{OUT} \geq 50mA$, the maximum current skew is less than ±2% between channels and less than ±2% between AS1109 devices.
- In the saturation region, the characteristics curve of the output stage is flat (see Figure 5 on page 6). Thus, the output current can be kept constant regardless of the variations of LED forward voltages (V_F).

9.4 Adjusting Output Current

The AS1109 scales up the reference current (I_{REF}) set by external resistor (R_{EXT}) to sink a current (I_{OUT}) at each output port. As shown in Figure 3 on page 6 the output current in the saturation region is extremely flat so that it is possible to define it as target current ($I_{OUT\ TARGET}$). $I_{OUT\ TARGET}$ can be calculated by:

$$V_{REXT} = 1.253V \quad \text{(EQ 1)}$$

$$I_{REF} = V_{REXT}/R_{EXT} \text{ (if the other end of } R_{EXT} \text{ is connected to ground)} \quad \text{(EQ 2)}$$

$$I_{OUT\ TARGET} = I_{REF}*15 = (1.253V/R_{EXT})*15 \quad \text{(EQ 3)}$$

Where:

R_{EXT} is the resistance of the external resistor connected to pin REXT.
V_{REXT} is the voltage on pin REXT.

The magnitude of current (as a function of R_{EXT}) is around 100mA at 186Ω, 50.52mA at 372Ω and 25.26mA at 744Ω. Figure 3 on page 6 shows the relationship curve between the $I_{OUT\ TARGET}$ of each channel and the corresponding external resistor (R_{EXT}).

9.5 Package Power Dissipation

The maximum allowable package power dissipation (PD) is determined as:

$$P_{D(MAX)} = (T_J - T_{AMB})/R_{TH(J-A)} \quad (EQ\ 4)$$

When 8 output channels are turned on simultaneously, the actual package power dissipation is:

$$P_{D(ACT)} = (I_{DD} * V_{DD}) + (I_{OUT} * Duty * V_{DS} * 8) \quad (EQ\ 5)$$

Therefore, to keep $P_{D(ACT)} \leq P_{D(MAX)}$, the allowable maximum output current as a function of duty cycle is:

$$I_{OUT} = \{[(T_J - T_{AMB})/R_{TH(J-A)}] - (I_{DD} * V_{DD})\}/V_{DS}/Duty/8 \quad (EQ\ 6)$$

Where:

T_J = 150ºC

9.6 Delayed Outputs

The AS1109 has graduated delay circuits between outputs. These delay circuits can be found between OUTN*n* and constant current block.

The fixed delay time is 20 ns (typ) where OUTN0 has no delay, OUTN1 has 20ns delay, OUTN2 has 40ns delay ... OUTN7 has 140ns delay. This delay prevents large inrush currents, which reduce power supply bypass capacitor requirements when the outputs turn on (see Figure 12 on page 9)

9.7 Switching-Noise Reduction

LED drivers are frequently used in switch-mode applications which normally exhibit switching noise due to parasitic inductance on the PCB.

9.8 Load Supply Voltage

Considering the package power dissipation limits (see EQ 4:6), the AS1109 should be operated within the range of V_{DS} = 0.4 to 1.0V.

For example, if V_{LED} is higher than 5V, V_{DS} may be so high that $P_{D(ACT)} > P_{D(MAX)}$ where $V_{DS} = V_{LED} - V_F$. In this case, the lowest possible supply voltage or a voltage reducer (V_{DROP}) should be used. The voltage reducer allows $V_{DS} = (V_{LED} - V_F) - V_{DROP}$.

Note: Resistors or zener diodes can be used as a voltage reducer as shown in Figure 24.

Figure 24. Voltage Reducer using Resistor (Left) and Zener Diode (Right)

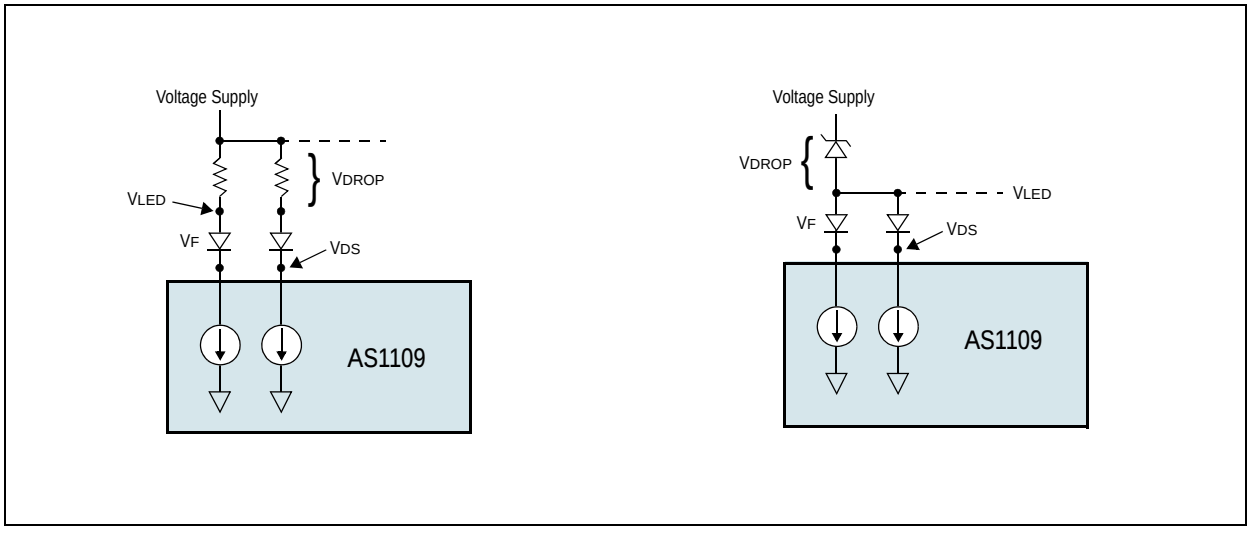

10 Package Drawings and Markings

The product is available in a 16-pin SOIC-150, 16-pin QSOP-150, and 16-pin QFN 4x4mm package.

Figure 25. 16-pin SOIC-150 Package

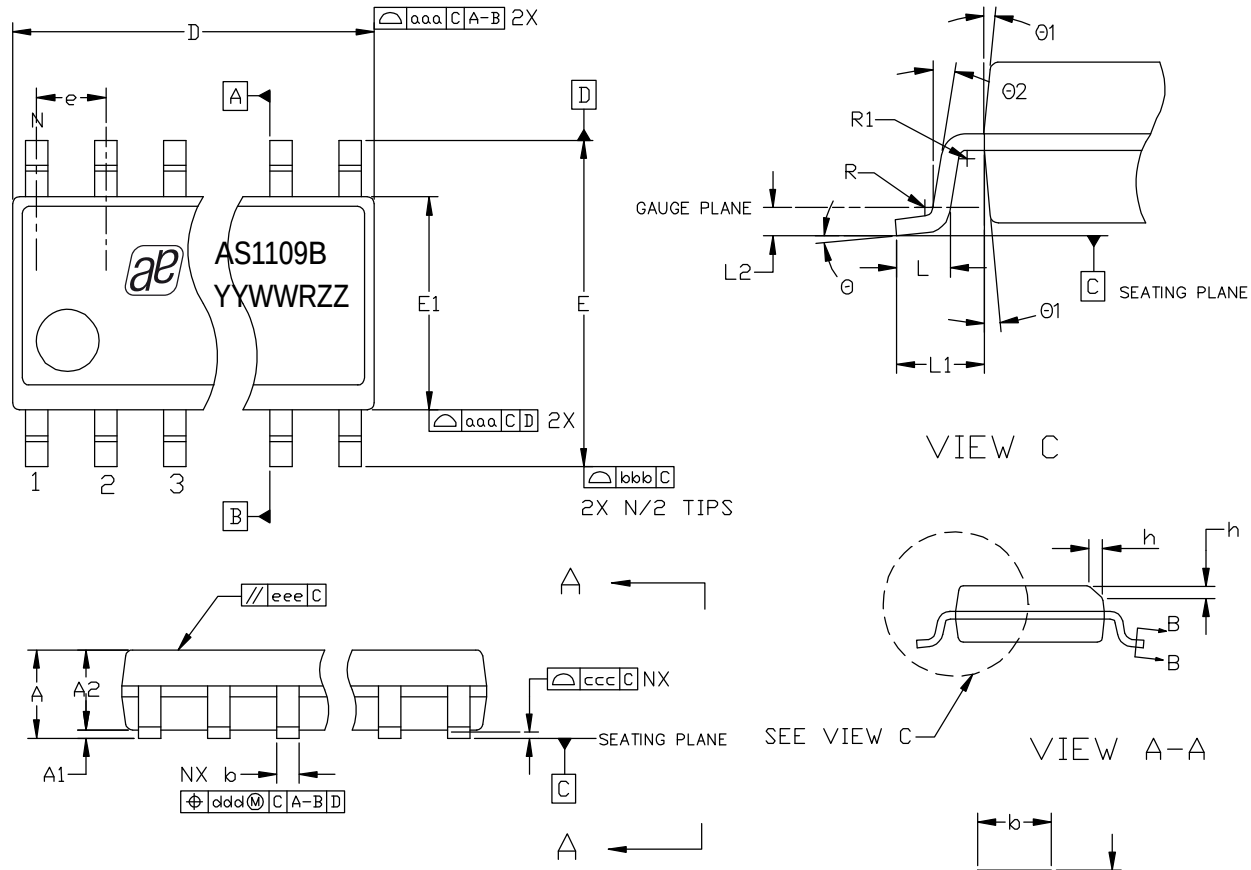

Symbol	Min	Nom	Max
A	-	-	1.75
A1	0.10	-	0.25
A2	1.25	-	-
b	0.31	-	0.51
c	0.17	-	0.25
D	-	9.90 BSC	-
E	-	6.00 BSC	-
E1	-	3.90 BSC	-
e	-	1.27 BSC	-
L	0.40	-	1.27
L1	-	1.40 REF	-
L2	-	0.25 BSC	-
R	0.07	-	-

Symbol	Min	Nom	Max
R1	0.07	-	
h	0.25	-	0.50
Θ	0º	-	8º
Θ1	5º	-	15º
Θ2	0º	-	-
aaa	-	0.10	-
bbb	-	0.20	-
ccc	-	0.10	-
ddd	-	0.25	-
eee	-	0.10	-
fff	-	0.15	-
ggg	-	0.15	-
N	16		

Notes:

1. Dimensioning & tolerancing conform to *ASME Y14.5M-1994*.
2. All dimensions are in millimeters. Angles are in degrees.

Marking: YYWWRZZ.

YY	WW	R	ZZ
Last two digits of the current year	Manufacturing Week	Plant identifier	Traceability code

Figure 26. 16-pin QSOP-150 Package

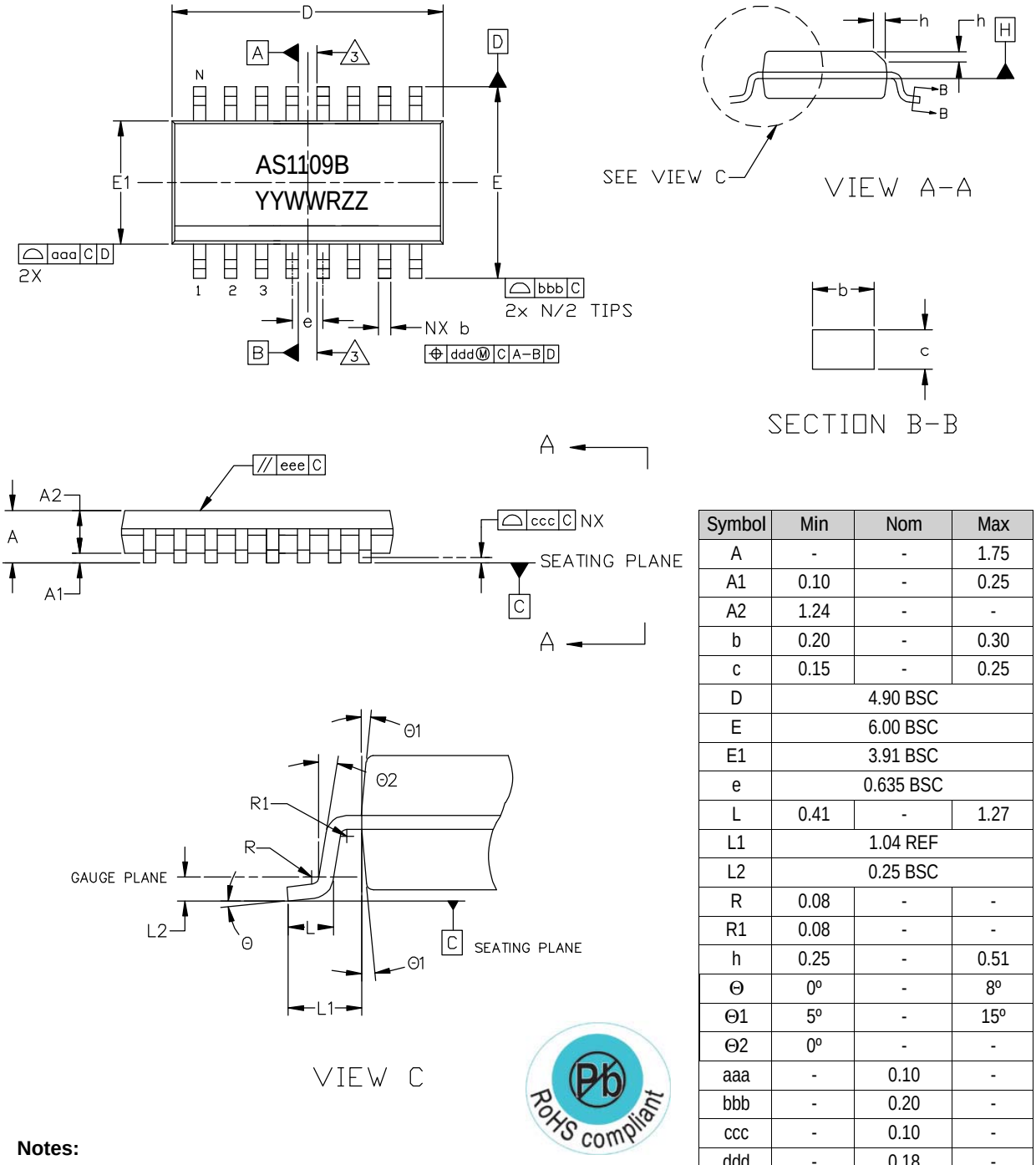

Symbol	Min	Nom	Max
A	-	-	1.75
A1	0.10	-	0.25
A2	1.24	-	-
b	0.20	-	0.30
c	0.15	-	0.25
D		4.90 BSC	
E		6.00 BSC	
E1		3.91 BSC	
e		0.635 BSC	
L	0.41	-	1.27
L1		1.04 REF	
L2		0.25 BSC	
R	0.08	-	-
R1	0.08	-	-
h	0.25	-	0.51
Θ	0º	-	8º
Θ1	5º	-	15º
Θ2	0º	-	-
aaa	-	0.10	-
bbb	-	0.20	-
ccc	-	0.10	-
ddd	-	0.18	-
eee	-	0.10	-
fff	-	0.15	-
N		16	

Notes:

1. Dimensioning & tolerancing conform to *ASME Y14.5M-1994*.
2. All dimensions are in millimeters. Angles are in degrees.
3. Datums A & B to be determined at Datum H.

Marking: YYWWRZZ.

YY	WW	R	ZZ
Last two digits of the current year	Manufacturing Week	Plant identifier	Traceability code

Figure 27. 16-pin QFN 4x4mm Package

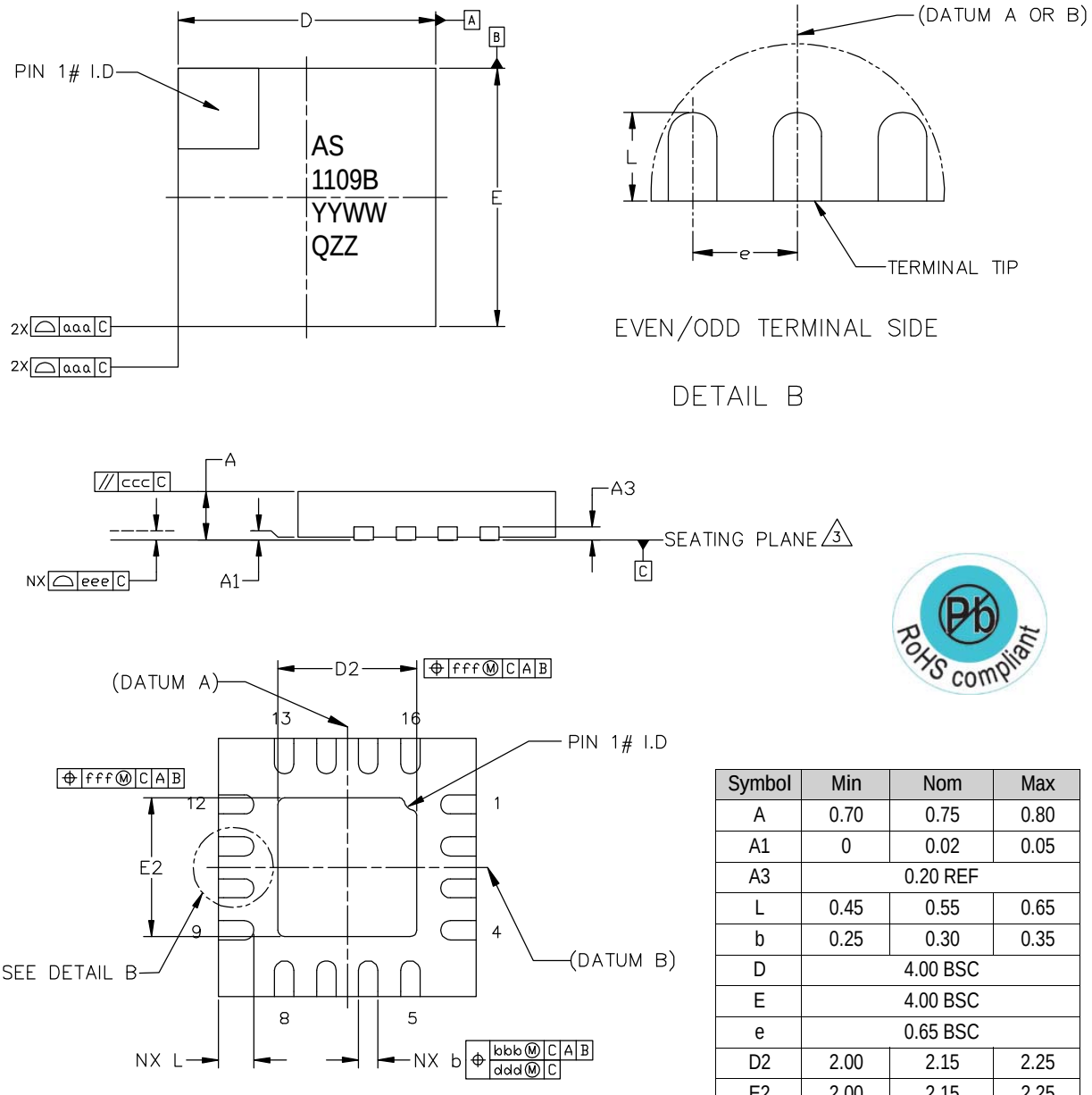

Symbol	Min	Nom	Max
A	0.70	0.75	0.80
A1	0	0.02	0.05
A3		0.20 REF	
L	0.45	0.55	0.65
b	0.25	0.30	0.35
D		4.00 BSC	
E		4.00 BSC	
e		0.65 BSC	
D2	2.00	2.15	2.25
E2	2.00	2.15	2.25
aaa	-	0.15	-
bbb	-	0.10	-
ccc	-	0.10	-
ddd	-	0.05	-
eee	-	0.08	-
fff	-	0.10	-
N		16	

Notes:

1. Dimensioning & tolerancing conform to *ASME Y14.5M-1994*.
2. All dimensions are in millimeters. Angles are in degrees.
3. Coplanarity applies to the exposed heat slug as well as the terminal.
4. Radius on terminal is optional.
5. N is the total number of terminals.

Marking: YYWWQZZ.

YY	WW	Q	ZZ
Last two digits of the current year	Manufacturing Week	Plant identifier	Traceability code

11 Ordering Information

The device is available as the standard products shown in Table 9.

Table 9. Ordering Information

Ordering Code	Marking	Description	Delivery Form	Package
AS1109-BSOU	AS1109B	Constant-Current, 8-Bit LED Driver with Diagnostics	Tubes	16-pin SOIC-150
AS1109-BSOT	AS1109B	Constant-Current, 8-Bit LED Driver with Diagnostics	Tape and Reel	16-pin SOIC-150
AS1109-BSSU	AS1109B	Constant-Current, 8-Bit LED Driver with Diagnostics	Tubes	16-pin QSOP-150
AS1109-BSST	AS1109B	Constant-Current, 8-Bit LED Driver with Diagnostics	Tape and Reel	16-pin QSOP-150
AS1109-BQFR	AS1109B	Constant-Current, 8-Bit LED Driver with Diagnostics	Tray	16-pin QFN (4x4mm)
AS1109-BQFT	AS1109B	Constant-Current, 8-Bit LED Driver with Diagnostics	Tape and Reel	16-pin QFN (4x4mm)

Note: All products are RoHS compliant.
Buy our products or get free samples online at www.ams.com/ICdirect

Technical Support is available at www.ams.com/Technical-Support

For further information and requests, email us at sales@ams.com
(or) find your local distributor at www.ams.com/distributor

Copyrights

Copyright © 1997-2012, ams AG, Tobelbaderstrasse 30, 8141 Unterpremstaetten, Austria-Europe. Trademarks Registered ®. All rights reserved. The material herein may not be reproduced, adapted, merged, translated, stored, or used without the prior written consent of the copyright owner.

All products and companies mentioned are trademarks or registered trademarks of their respective companies.

Disclaimer

Devices sold by ams AG are covered by the warranty and patent indemnification provisions appearing in its Term of Sale. ams AG makes no warranty, express, statutory, implied, or by description regarding the information set forth herein or regarding the freedom of the described devices from patent infringement. ams AG reserves the right to change specifications and prices at any time and without notice. Therefore, prior to designing this product into a system, it is necessary to check with ams AG for current information. This product is intended for use in normal commercial applications. Applications requiring extended temperature range, unusual environmental requirements, or high reliability applications, such as military, medical life-support or life-sustaining equipment are specifically not recommended without additional processing by ams AG for each application. For shipments of less than 100 parts the manufacturing flow might show deviations from the standard production flow, such as test flow or test location.

The information furnished here by ams AG is believed to be correct and accurate. However, ams AG shall not be liable to recipient or any third party for any damages, including but not limited to personal injury, property damage, loss of profits, loss of use, interruption of business or indirect, special, incidental or consequential damages, of any kind, in connection with or arising out of the furnishing, performance or use of the technical data herein. No obligation or liability to recipient or any third party shall arise or flow out of ams AG rendering of technical or other services.

Contact Information

Headquarters

ams AG
Tobelbaderstrasse 30
A-8141 Unterpremstaetten, Austria

Tel : +43 (0) 3136 500 0
Fax : +43 (0) 3136 525 01

For Sales Offices, Distributors and Representatives, please visit:
http://www.ams.com/contact