New Product Feature

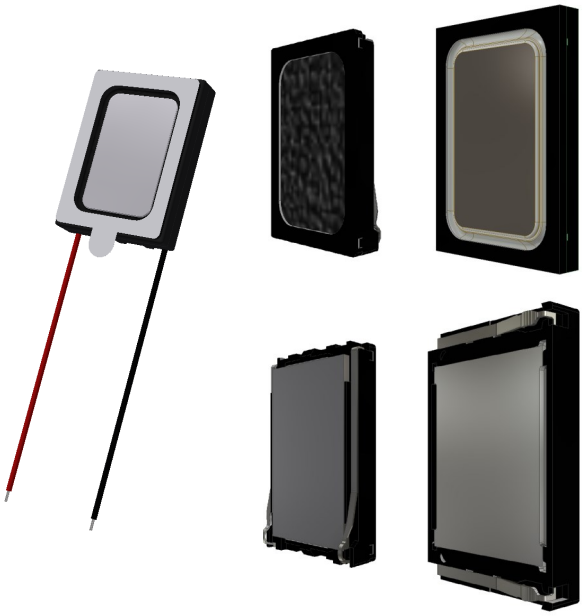

Slim-Line Micro Speakers

PUI Audio, Inc.'s new line of slim-line micro speakers are purpose-built for space-limited, modern electronics such as smartphones, tablets, laptops, as well as wearable technology and IoT devices such as WiFi-enabled thermostats.

15 x 11 mm Slim-Line Micro Speakers

The **AS01508AO-SC-R** is a 15 x 11 speaker with pre-installed double-sided adhesive for quick, easy installation and spring-loaded contacts for a solderless electrical connection and features a 4.42 mm thickness.

25 mm speaker leads replace the spring contacts on the AS01508AO-SC-R to minimize thickness to 3.9 mm on the **AS01508AO-LW25-R**.

For more output and lower distortion, a multi-magnet motor drives the **AS01508AO-3-R**, while solder pads drive the thickness down to 3.5 mm.

A spring-contact version is available in the **AS01508AO-3-SC-R**.

These are also available with an IP65-rated face: the **AS01508AO-WP-R** and the **AS01508AO-SC-WP-R**.

Each 15 x 11 mm speaker features a class-leading resonant frequency below 600 Hz for realistic sound.

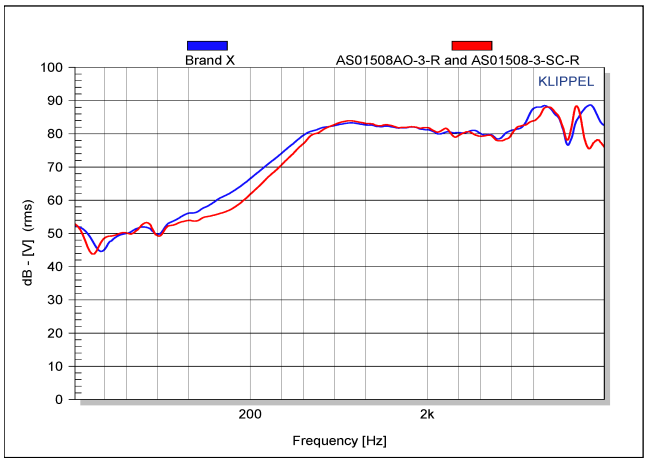

Frequency Response Comparison

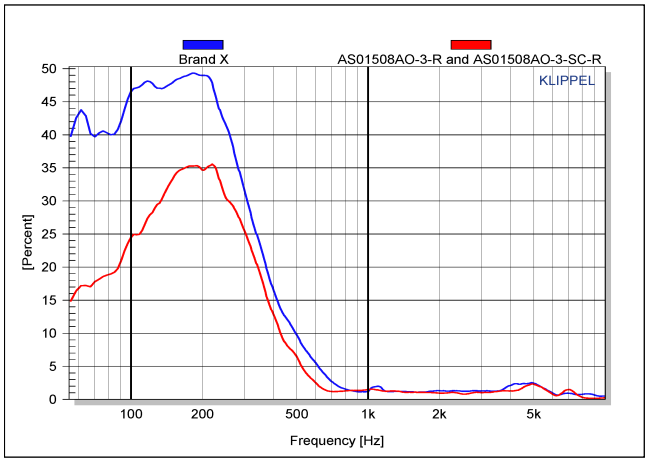

Total Harmonic Distortion (THD) Comparison

18 x 13 mm Slim-Line Micro Speakers

PUI Audio's 18 x 13 mm speakers build on the performance of the 15 x 11 mm speakers, while reducing the overall thickness to below 3 mm on the **AS01808AO-3-R** with solder pads and 3.1 mm on the **AS01808AO-3-SC-R** with spring contacts.

Both feature an amazingly low resonant frequency of 320 Hz and are available with IP65-rated faces in the **AS01808AO-WP-R** and **AS01808AO-SC-WP-R**.

Contact your PUI Audio distributor today for pricing and availability!

pui audio inc
a projects unlimited company
3541 Stop Eight Road • Dayton, Ohio 45414

AS01508AO-3-SC-R 15x11mm Slim-Mount Speaker

Product Overview

- 15 x 11 mm speaker with Neodymium magnet for 94 dB sensitivity
- 0.7W continuous, 1W maximum power handling and 8Ω impedance
- Less than 5 mm thick for space-limited applications such as cell phones and consumer electronics with spring contacts

Frequency Response (0.7W @ 10 cm)

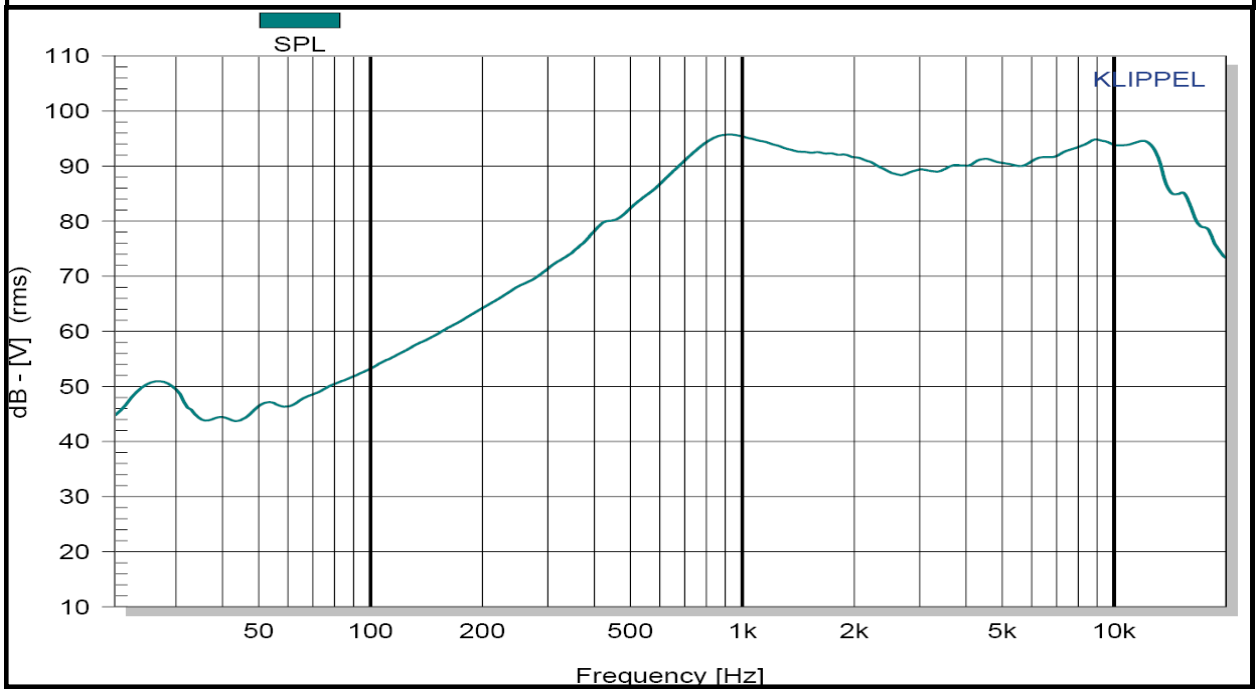

PUI Audio Inc. engages in continuous product improvement. All specifications are subject to change without notice. www.puiaudio.com. Copyright © 2016. Last Revised 9/16.

AS01508AO-3-SC-R
15x11mm Slim-Mount Speaker

Mechanical and Environment Testing	
Test Description	**Test Condition**
High Temperature	60°C with random humidity for 96 hours
Low Temperature	-25°C with random humidity for 96 hours
Humidity	40°C with 90% to 95% relative humidity for 96 hours
Vibration	1.5 mm movement modulated at 15 to 45 Hz for 3 hours
Drop Test	75 cm free fall onto concrete, 10 cycles
Temperature Cycle Test	-25°C to 60°C, 4 cycles
After tests, speaker shall rest for 1 hours. SPL shall not deviate ±3 dB from pre-test measurement.	

Frequency Response Measurement Setup

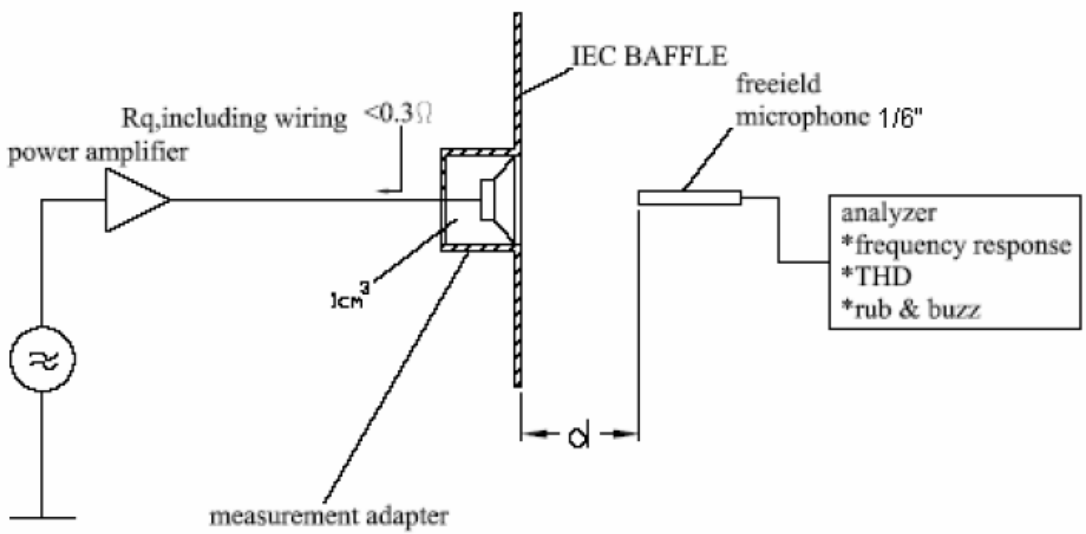

PUI Audio Inc. engages in continuous product improvement. All specifications are subject to change without notice. www.puiaudio.com. Copyright © 2016. Last Revised 9/16.

SPECIFICATIONS

PARAMETERS	VALUES	UNITS
RATED INPUT POWER	0.7	W
MAX INPUT POWER	1.0	W
IMPEDANCE	8± 15%	OHM
OUTPUT SPL @ 0.7W/0.1M (AVG. 0.8, 1, 1.2, 1.5 kHz)	94±3	dBA
DISTORTION (MAX.)	5%	-
RESONANT FREQUENCY	500±20%	Hz
FREQUENCY RANGE	Fo ~ 14,000	Hz
HOUSING MATERIAL	ABS	-
CONE MATERIAL	MYLAR	-
MAGNET MATERIAL	NdFeB	-
OPERATING TEMPERATURE	-25 ~ +60	°C
WEIGHT	1.7	grams

THIS DOCUMENT CONTAINS DATA PROPRIETARY TO PROJECTS UNLIMITED, INC. ANY USE OR REPRODUCTION, IN ANY FORM, WITHOUT PRIOR WRITTEN PERMISSION OF PROJECTS UNLIMITED, INC. IS PROHIBITED.
©2003, Projects Unlimited Inc.

REVISION HISTORY

LTR	DESCRIPTION	DATE	APPROVED
-	RELEASED FROM ENGINEERING	3/23/16	

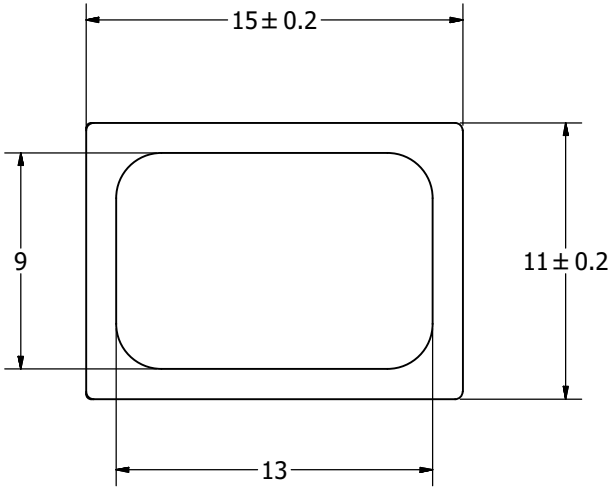

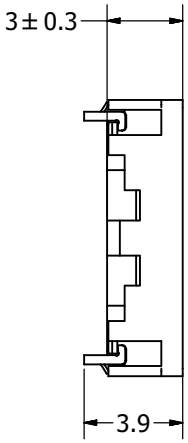

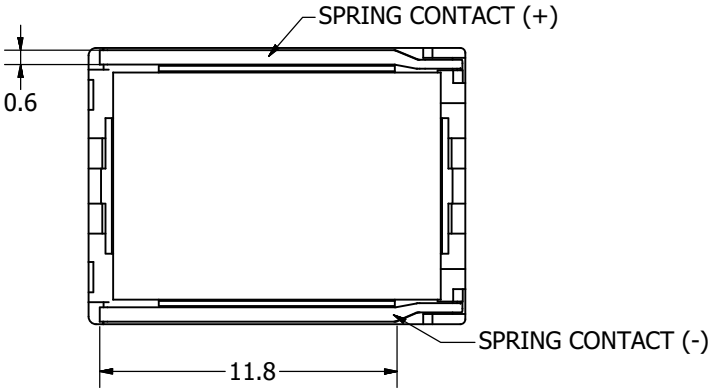

NOTES:

1. ALL DIMENSIONS ARE IN MILLIMETERS.
2. SPECIFICATIONS SUBJECT TO CHANGE OR WITHDRAWL WITHOUT NOTICE.
3. THIS PART IS RoHS 2011/65/EU COMPLIANT.

UNLESS OTHERWISE SPECIFIED:
DIMENSIONS ARE IN MILLIMETERS,
TOLERANCES ARE ±0.5 AND ANGLES ARE ±3°.

SIZE A3

AS01508AO-3-SC-R.idw

Designed by	Date	Checked by	Date	Approved by	Date	Drawn Date
M.V.	3/23/2016	M.V.	3/23/2016	B.R.	3/23/2016	3/23/2016

pui audio inc
a projects unlimited company

AS01508AO-3-SC-R

Speaker

Edition: -

Sheet: 1 / 1