RoHS

Single Port Vertical Mount RJ45

ARV11-3832I

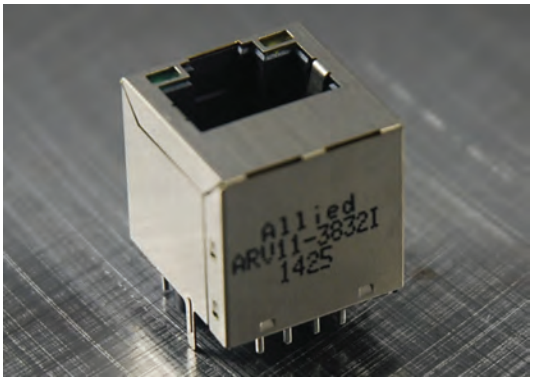

- **10/100 BaseT PoE for Ethernet Applications**
- **Impedance: 100OHMS**
- **RJ45 jack cavity confirms to FCC rules and regulations Part 68, SUB Part F**
- **Industrial Temp: -40ºC to +85ºC**
- **Available in other Circuit Designs**
- **Optional Gold Plating Thickness**

Electrical Specifications @ 25°C

Part Number	OCL(uH Min) @ 100kHz, 0.1V	Turns Ratio chip: cable (±2%)	Insertion Loss (dB Max)	Return Loss (dB Min)		
	With 8mA DC Bias		1-100MHz	1-30MHz	30-60MHz	60-80MHz
ARV11-3832I	350	1CT:1CT	-1.0	-18	-18-20Log(F/30MHz)	-12

Electrical Specifications @ 25°C

Cross Talk (dB Min)					CMR (dB Min)					CDMR (dB Min)					HI-POT (Vrms)
0.5-1MHz	10MHz	30MHz	50MHz	100MHz	0.3-1MHz	10MHz	30MHz	60MHz	100MHz	0.3-1MHz	10MHz	30MHz	60MHz	100MHz	1.0mA/3Sec.
-50	-50	-40	-35	-30	-50	-47	-42	-37	-30	-50	-50	-50	-45	-40	1500

All specifications subject to change without notice.

MECHANICAL

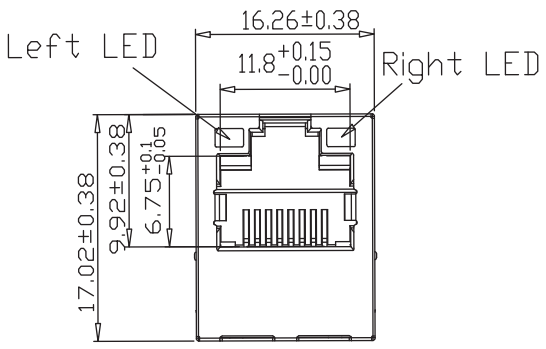

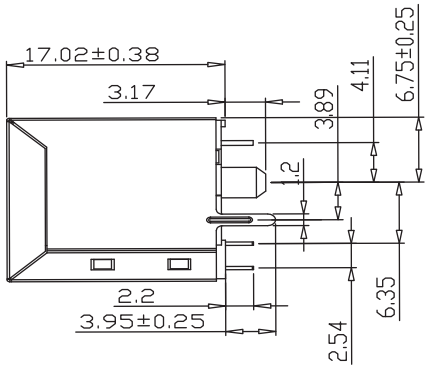

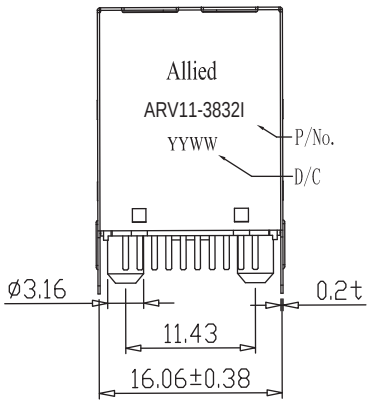

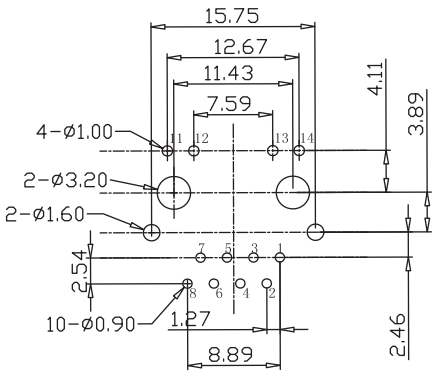

SCHEMATICS

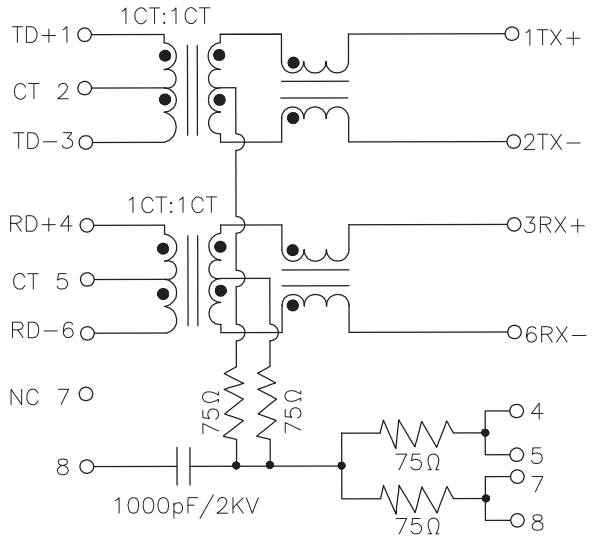

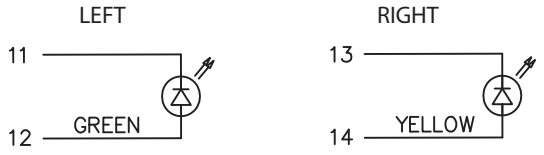

Standard LED	Wavelength	Vf @If=20mA	Ir @Vr=5V
Green	565nm	1.7~2.6 V	10uA max.
Yellow	590nm	1.7~2.6 V	10uA max.

With a forward current of 20mA

PCB LAYOUT

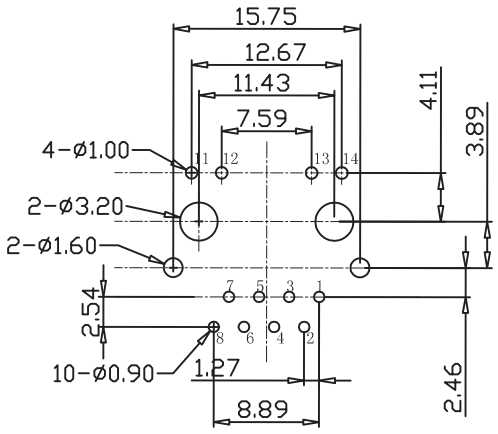

NOTES

1.Shielded - 0.20mm THICKNESS BRASS C2680 H.
PLATING NICKEL 20u" min.
2.Housing - Standard Material PA66,Glass Filled
Polyester UL94V-0 Standed Color Yellow.
3.RJ Terminal - Plastic:PA66 UL94V-0,Standard Color Yellow.
Pin:0.35mm Thickness Phos-Bronze C5210 EH.
Plating:Nickel40u"~60u" for all and Sn 100%
,and Gold Plating.
4.Input Terminal - Plastic:PA66,Glass Filled,UL94V-0,
Standard Color Yellow.
Pin:0.35mm Thickness C5191-H.
Plating:Nickel40u"~60u" for all and Sn 100%.