TAIWAN SEMICONDUCTOR

RoHS COMPLIANCE

AR(S)25 SERIES

25.0 AMPS. High Current Button Rectifiers

ARS **AR**



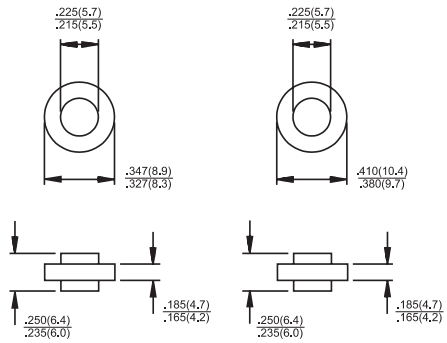

Dimensions in inches and (millimeters)

Features

- ✧ Plastic material used carries Underwriters Laboratory Classification 94V-0
- ✧ Low cost construction utilizing void-free molded plastic technique
- ✧ Low cost
- ✧ Diffused junction
- ✧ Low leakage
- ✧ High surge capability
- ✧ High temperature soldering guaranteed: 260°C for 10 seconds

Mechanical Data

- ✧ Case: Molded plastic case
- ✧ Terminals: Pure tin plated, lead free., solderable per MIL-STD-202, Method 208
- ✧ Polarity: Color ring denotes cathode
- ✧ Weight: 0.07 ounce, 1.8 grams
- ✧ Mounting position: Any

Maximum Ratings and Electrical Characteristics

Rating at 25 °C ambient temperature unless otherwise specified.
Single phase, half wave, 60 Hz, resistive or inductive load.
For capacitive load, derate current by 20%

Type Number	Symbol	ARS 25A / AR 25A	ARS 25B / AR 25B	ARS 25D / AR 25D	ARS 25G / AR 25G	ARS 25J / AR 25J	ARS 25K / AR 25K	ARS 25M / AR 25M	Units
Maximum Recurrent Peak Revere Voltage	V_{RRM}	50	100	200	400	600	800	1000	V
Maximum RMS Voltage	V_{RMS}	35	70	140	280	420	560	700	V
Maximum DC Blocking Voltage	V_{DC}	50	100	200	400	600	800	1000	V
Maximum Average Forward Rectified Current @Tc = 150 °C	$I_{(AV)}$	25							A
Peak Forward Surge Current, 8.3 ms Single Half Sine-wave Superimposed on Rated Load (JEDEC method) at T_J=150°C	I_{FSM}	400							A
Maximum Instantaneous Forward Voltage @ 25A	V_F	1.0							V
Maximum DC Reverse Current @ Tc=25 °C at Rated DC Blocking Voltage @ Tc=125 °C	I_R	5.0 250							uA uA
Typical Reverse Recovery Time (Note 2)	Trr	3.0							uS
Typical Junction Capacitance (Note 1) T_J=25°C	Cj	300							pF
Typical Thermal Resistance (Note 3)	$R_{\theta JC}$	1.0							°C/W
Operating and Storage Temperature Range	T_J, T_{STG}	-50 to +175							°C

Notes:
1. Measured at 1 MHz and Applied Reverse Voltage of 4.0 V D.C.
2. Reverse Recovery Test Conditions: I_F=0.5A, I_R=1.0A, I_{RR}=0.25A
3. Thermal Resistance from Junction to Case, Singe Side Cooled.

RATINGS AND CHARACTERISTIC CURVES (AR(S)25 SERIES)

FIG.1- MAXIMUM FORWARD CURRENT DERATING CURVE

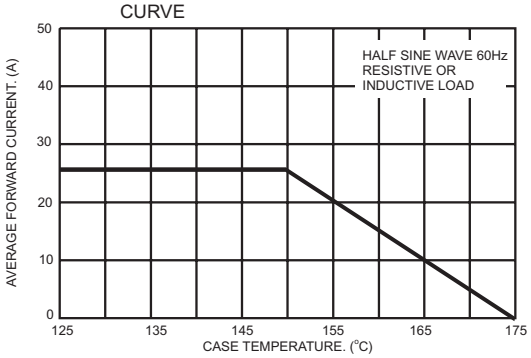

FIG.2- TYPICAL REVERSE CHARACTERISTICS

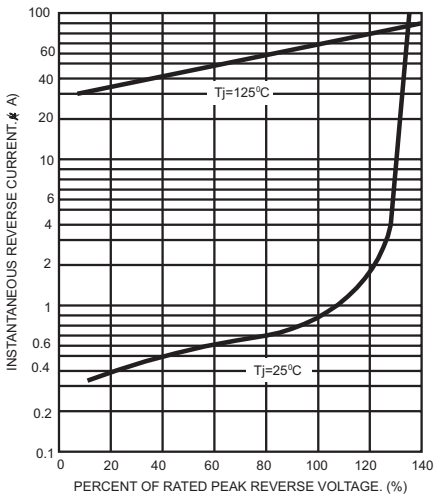

FIG.3- MAXIMUM NON-REPETITIVE PEAK FORWARD SURGE CURRENT

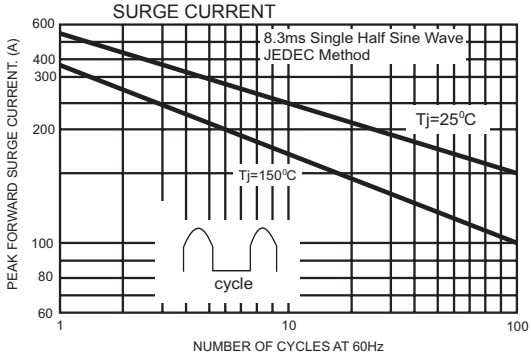

FIG.4- TYPICAL JUNCTION CAPACITANCE

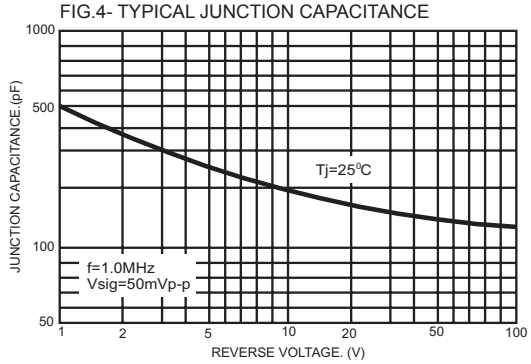

FIG.5- TYPICAL FORWARD CHARACTERISTICS

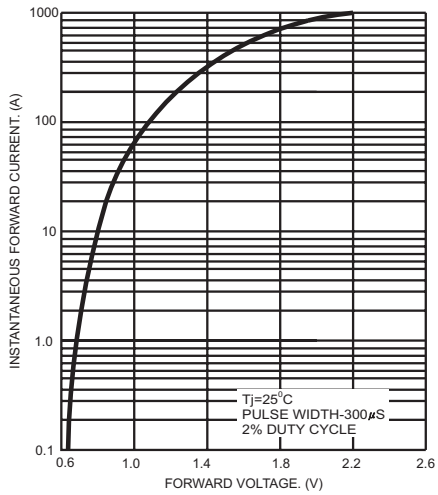

FIG.6- REVERSE RECOVERY TIME CHARACTERISTIC AND TEST CIRCUIT DIAGRAM

