RJ45 10/100 Base-T Jack with Magnetic Module

ARJ11B

RoHS Compliant

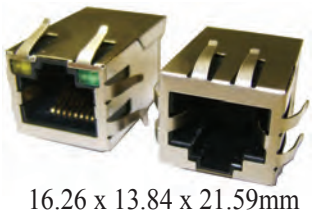

16.26 x 13.84 x 21.59mm

FEATURES:

- Excellent EMI suppression
- Meet IEEE 802.3 standards and FCC mechanical requirements
- Low Cost, RoHS Compliant Reflow-able device

APPLICATIONS:

- LAN-on-Motherboard (LOM)
- SOHO (ADSL modems), Hubs.
- Suitable for CAT 5 & 6 Fast Ethernet Cable or better UTP

STANDARD SPECIFICATIONS:

Operating Temperature: - 0°C to + 70°C
Storage Temperature: - 40°C to +85°C

Part Number	Turns Ratio ±5%		EMI Fingers	LED (L/R)	Insertion Loss (dB max)
	TX	RX			0.3-100 MHz
ARJ11B-MASAA-MU2 to ARJ11B-MASAI-MU2	1CT:1CT	1CT:1CT	YES	---	-1
ARJ11B-MASAJ-MU2 to ARJ11B-MASAM-MU2	1CT:1CT	1CT:1CT	YES	---	-1
ARJ11B-MASAN-LU2 to ARJ11B-MASBF-LU2	1CT:1	1CT:1CT	YES	---	-1
ARJ11B-MESCB-A-B-ELT2	1CT:1	1CT:1	NO	G/Y	-1
ARJ11B-MASCB-LT2	1CT:1	1CT:1	YES	---	-1
ARJ11B-MBSCB-A-B-ELT2	1CT:1	1CT:1	YES	G/Y	-1
ARJ11B-MDSBQ-MU2	1CT:1CT	1CT:1CT	NO	---	-1
ARJ11B-MESBQ-A-B-EMU2	1CT:1CT	1CT:1CT	NO	G/Y	-1
ARJ11B-MASBQ-MU2	1CT:1CT	1CT:1CT	YES	---	-1
ARJ11B-MBSBQ-A-B-EMU2	1CT:1CT	1CT:1CT	YES	G/Y	-1
ARJ11B-MFSBQ-A-A-EMU2	1CT:1CT	1CT:1CT	YES	G/G	-1
ARJ11B-MASAJ-MU2	1CT:1CT	1CT:1CT	YES	---	-1
ARJ11B-MASBR-QU2	1CT:1.414CT	1CT:1CT	YES	---	-1
ARJ11B-MFSBR-A-A-EQU2	1CT:1.414CT	1CT:1CT	YES	G/G	-1
ARJ11B-MDSAO-LU2	1CT:1	1CT:1CT	NO	---	-1
ARJ11B-MESAO-A-B-ELU2	1CT:1	1CT:1CT	NO	G/Y	-1
ARJ11B-MESAO-A-A-ELU2	1CT:1	1CT:1CT	NO	G/G	-1
ARJ11B-MASAO-LU2	1CT:1	1CT:1CT	YES	---	-1
ARJ11B-MBSAO-A-B-ELU2	1CT:1	1CT:1CT	YES	G/Y	-1
ARJ11B-MFSAO-A-A-ELU2	1CT:1	1CT:1CT	YES	G/G	-1
ARJ11B-MFSAO-BA-A-GLU2	1CT:1	1CT:1CT	YES	YG/G	-1
ARJ11B-MBSAP-A-B-ELU2	1CT:1	1CT:1CT	YES	G/Y	-1
ARJ11B-MASAC-MU2	1CT:1CT	1CT:1CT	YES	---	-1
ARJ11B-MASAD-OW2	1CT;1.41CT	1CT:1.41CT	YES	---	---
ARJ11B-MBSAI-A-B-EMU2	1CT:1CT	1CT:1CT	YES	G/Y	-1
ARJ11B-MASCC-MU2	1CT:1CT	1CT:1CT	YES	---	-1
ARJ11B-MESBW-B-A-EMU2	1CT:1CT	1CT:1CT	NO	Y/G	-1

30332 Esperanza, Rancho Santa Margarita, California 92688
tel 949-546-8000 | fax 949-546-8001 | www.abracon.com

RJ45 10/100 Base-T Jack with Magnetic Module

ARJ11B

RoHS Compliant

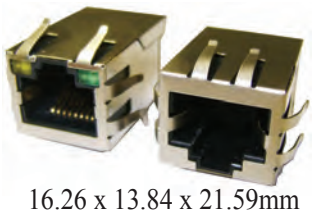

16.26 x 13.84 x 21.59mm

STANDARD SPECIFICATIONS: 25°C (contd)

Part Number	Return Loss (dB min @ 100Ω±15Ω)				Crosstalk (dB min)			Common Mode Rejection (dB min)			Hipot (Vrms)
	1- 30 MHz	40 MHz	50 MHz	60-80 MHz	30 MHz	60 MHz	100 MHz	30 MHz	60 MHz	100 MHz	
ARJ11B-MASAA-MU2 to ARJ11B-MASAI-MU2	-18	-16	-14	-12	-45	-40	-35	-35	-30	-25	1500
ARJ11B-MASAJ-MU2 to ARJ11B-MASAM-MU2	-18	-16	-14	-12	-45	-40	-35	-35	-30	-25	1500
ARJ11B-MASAN-LU2 to ARJ11B-MASBF-LU2	-18	-16	-14	-12	-45	-40	-35	-35	-30	-25	1500
ARJ11B-MESCB-A-B-ELT2	-18	-16	-12	-10	-40	-35	-30	-30	-20	-20	1500
ARJ11B-MASCB-LT2	-18	-16	-12	-10	-40	-35	-30	-30	-20	-20	1500
ARJ11B-MBSCB-A-B-ELT2	-18	-16	-12	-10	-40	-35	-30	-30	-20	-20	1500
ARJ11B-MDSBQ-MU2	-18	-16	-12	-10	-40	-35	-30	-30	-20	-20	1500
ARJ11B-MESBQ-A-B-EMU2	-18	-16	-12	-10	-40	-35	-30	-30	-20	-20	1500
ARJ11B-MASBQ-MU2	-18	-16	-12	-10	-40	-35	-30	-30	-20	-20	1500
ARJ11B-MBSBQ-A-B-EMU2	-18	-16	-12	-10	-40	-35	-30	-30	-20	-20	1500
ARJ11B-MFSBQ-A-A-EMU2	-18	-16	-12	-10	-40	-35	-30	-30	-20	-20	1500
ARJ11B-MASAJ-MU2	-18	-16	-12	-10	-40	-35	-30	-30	-20	-20	1500
ARJ11B-MASBR-QU2	-18	-16	-12	-10	-40	-35	-30	-30	-20	-20	1500
ARJ11B-MFSBR-A-A-EQU2	-18	-16	-12	-10	-40	-35	-30	-30	-20	-20	1500
ARJ11B-MDSAO-LU2	-18	-16	-12	-10	-40	-35	-30	-30	-20	-20	1500
ARJ11B-MESAO-A-B-ELU2	-18	-16	-12	-10	-40	-35	-30	-30	-20	-20	1500
ARJ11B-MESAO-A-A-ELU2	-18	-16	-12	-10	-40	-35	-30	-30	-20	-20	1500
ARJ11B-MASAO-LU2	-18	-16	-12	-10	-40	-35	-30	-30	-20	-20	1500
ARJ11B-MBSAO-A-B-ELU2	-18	-16	-12	-10	-40	-35	-30	-30	-20	-20	1500
ARJ11B-MFSAO-A-A-ELU2	-18	-16	-12	-10	-40	-35	-30	-30	-20	-20	1500
ARJ11B-MFSAO-BA-A-GLU2	-18	-16	-12	-10	-40	-35	-30	-30	-20	-20	1500
ARJ11B-MBSAP-A-B-ELU2	-18	-16	-12	-10	-40	-35	-30	-30	-20	-20	1500
ARJ11B-MASAC-MU2	-18	-16	-12	-10	-40	-35	-30	-30	-20	-20	1500
ARJ11B-MASAD-OW2	--	--	--	--	-40	-35	-30	-30	-20	-20	1500
ARJ11B-MBSAI-A-B-EMU2	-18	-16	-12	-10	-40	-35	-30	-30	-20	-20	1500
ARJ11B-MASCC-MU2	-18	-16	-12	-10	-40	-35	-30	-30	-20	-20	1500
ARJ11B-MESBW-B-A-EMU2	-18	-16	-12	-10	-40	-35	-30	-30	-20	-20	1500

Contact Abracon for more custom configurations. See options to build a custom configuration.

OPTIONS & PART IDENTIFICATION:

ARJ11B -□□-□-□-□□□□

Mechanical	Schematic	Left LED color (e.g. B for Yellow, AB for Green-Yellow)	Right LED color (e.g. B for Yellow, AB for Green-Yellow)	LED polarity	Turns Ratio (Tx)	Turns Ratio (Rx)	Gold plating
MA ~ MF (Please see mechanical section)	SAA ~ SCC (Please see schematic section)	Blank: No LED	Blank: No LED	Blank: No LED	K: 1CT:1.41	S: 1CT:1.41	1: 3u "
		A: Green	A: Green	E ~ J (Please see 7.0 LED polarity section)	L: 1CT:1	T: 1CT:1	2: 6u "
		B: Yellow	B: Yellow		M: 1CT:1CT	U: 1CT:1CT	3: 15u "
		C: Amber	C: Amber		N: 1.414:1CT	V: 1.414:1CT	4: 30u "
		D: Orange	D: Orange		O: 1CT:1.41CT	W:1CT:1.41CT	5: 50u "
					P: 1:2CT	X: 1:2CT	
					Q: 1:1.414CT	Y: 1:1.414CT	
					R: 1CT:2.5	Z: 1CT:2.5	

30332 Esperanza, Rancho Santa Margarita, California 92688
tel 949-546-8000 | fax 949-546-8001 | www.abracon.com

RJ45 10/100 Base-T Jack with Magnetic Module

ARJ11B

RoHS Compliant

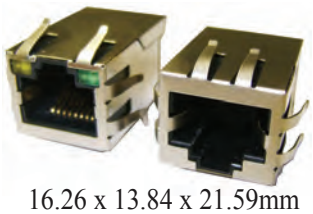

16.26 x 13.84 x 21.59mm

OUTLINE DRAWING:

MA

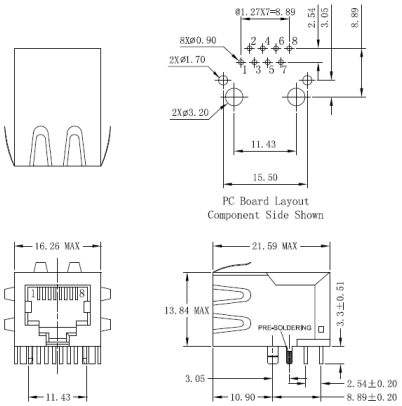

MB

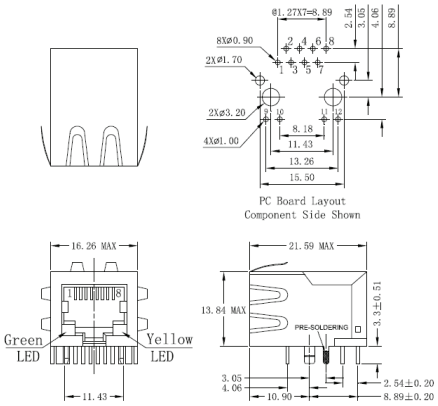

LED pins are parallel

MC

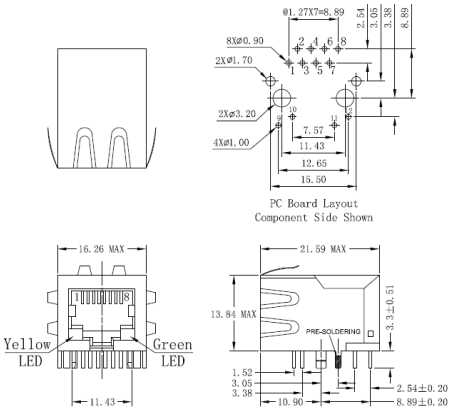

LED pins are oblique

MD

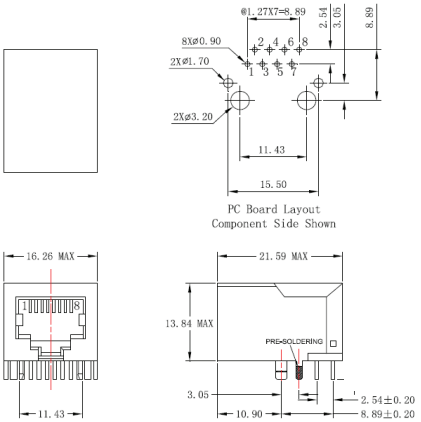

ME

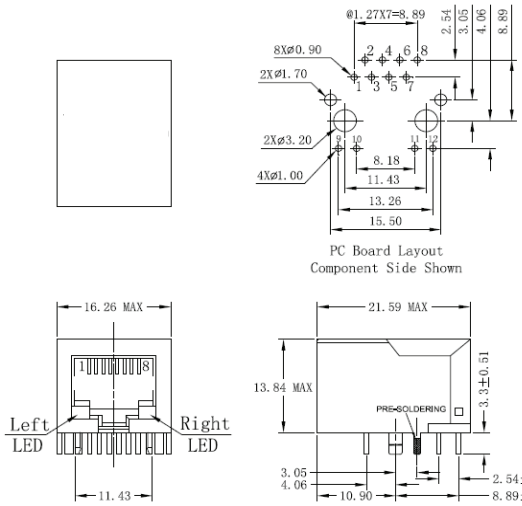

LED pins are parallel

MF

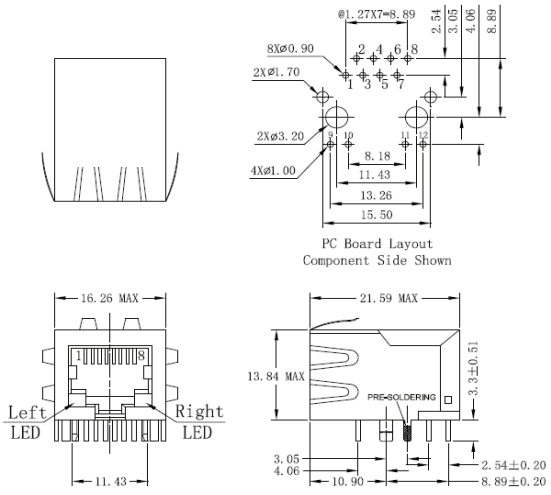

LED pins are parallel

Dimensions: mm (Unless otherwise specified, tolerances are ± 0.25mm)

30332 Esperanza, Rancho Santa Margarita, California 92688
tel 949-546-8000 | fax 949-546-8001 | www.abracon.com

RJ45 10/100 Base-T Jack with Magnetic Module

ARJ11B

RoHS Compliant

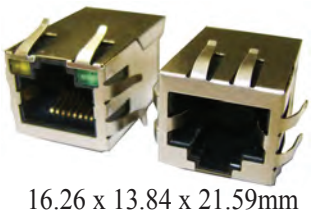

16.26 x 13.84 x 21.59mm

SCHEMATICS

SAA

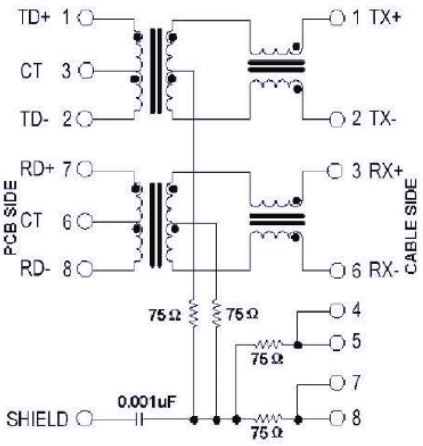

SAB

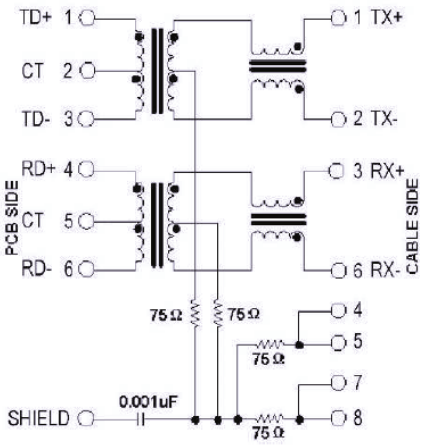

SAC

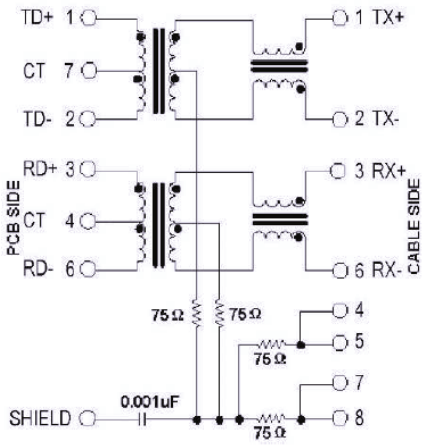

SAD

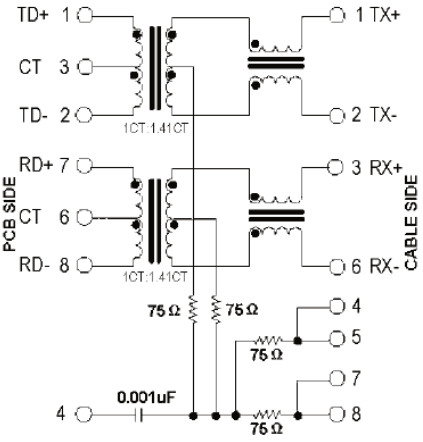

SAE

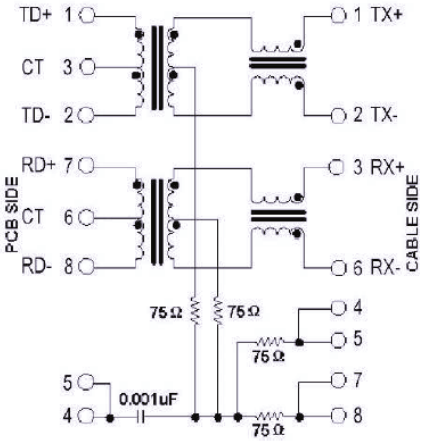

SAF

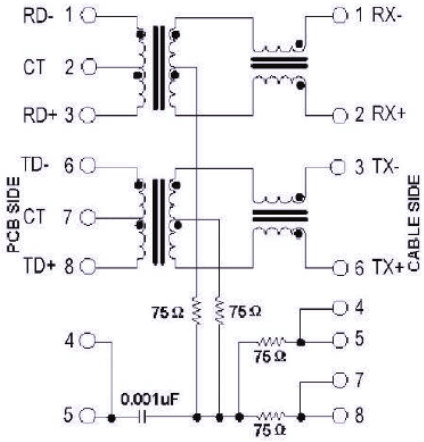

SAG

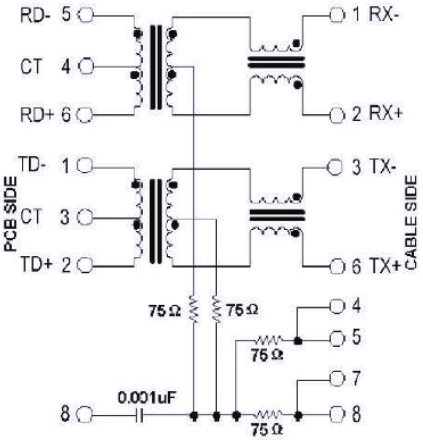

SAH

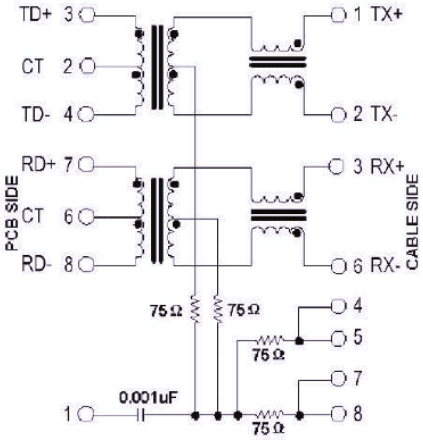

SAI

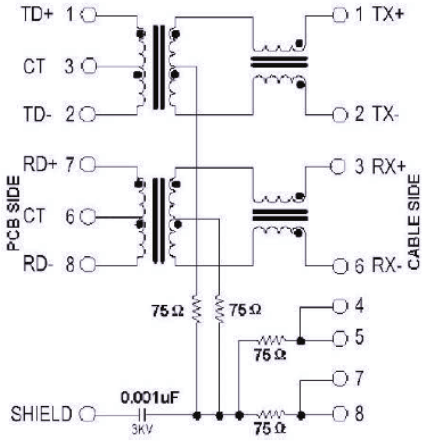

RJ45 10/100 Base-T Jack with Magnetic Module

ARJ11B

RoHS Compliant

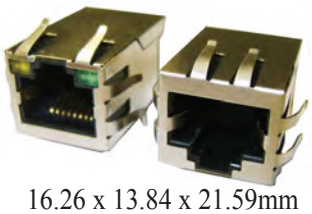

16.26 x 13.84 x 21.59mm

SCHEMATICS

SAJ

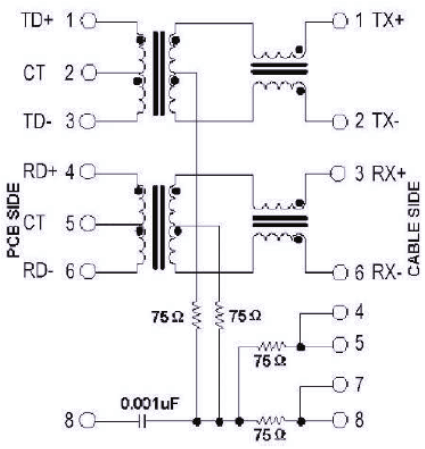

SAK

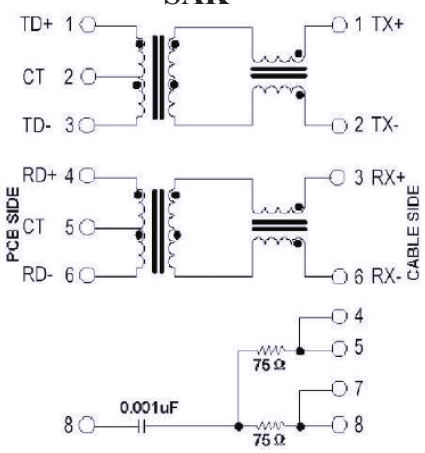

SAL

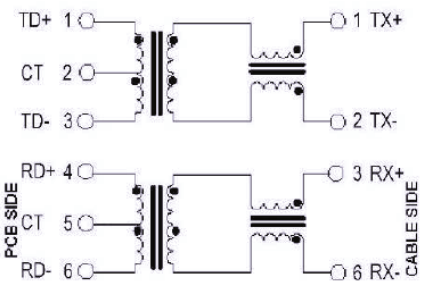

SAM

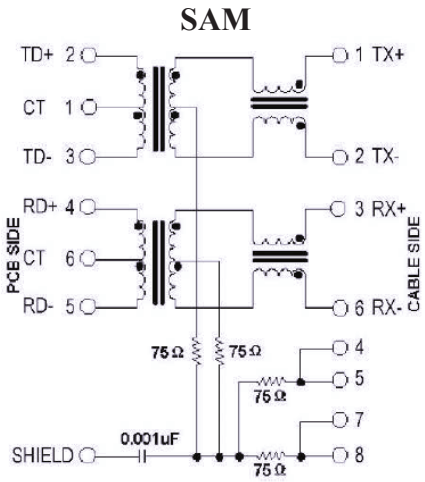

SAN

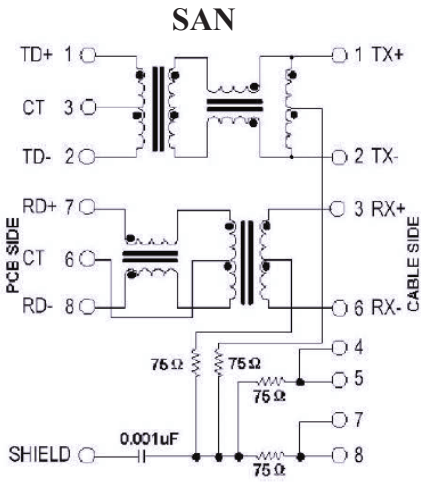

SAO

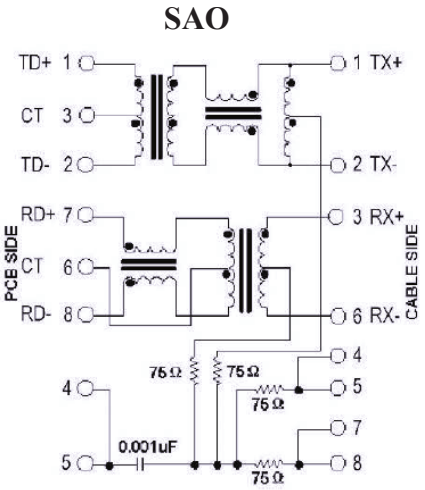

SAP

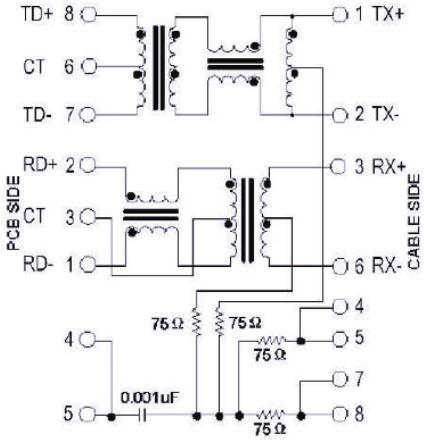

SAQ

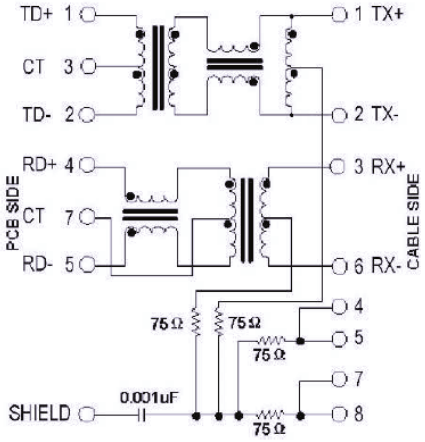

SAR

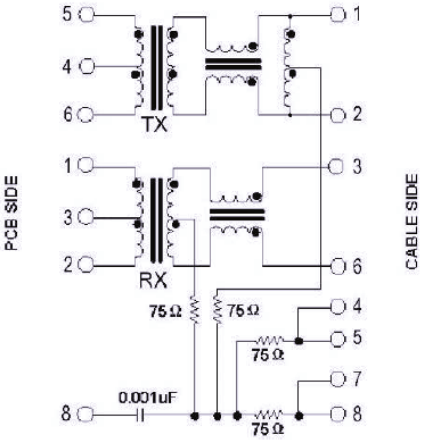

30332 Esperanza, Rancho Santa Margarita, California 92688
tel 949-546-8000 | fax 949-546-8001 | www.abracon.com

RJ45 10/100 Base-T Jack with Magnetic Module

ARJ11B

RoHS Compliant

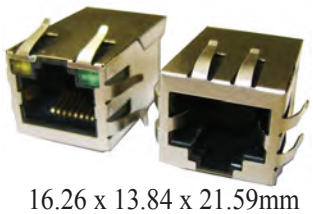

16.26 x 13.84 x 21.59mm

SCHEMATICS

SAS

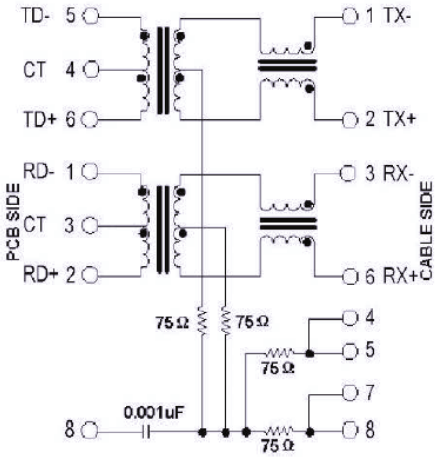

SAT

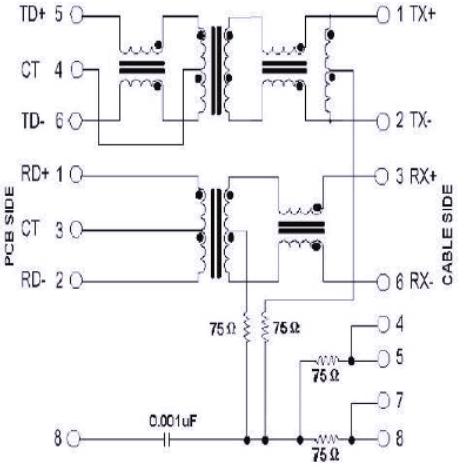

SAU

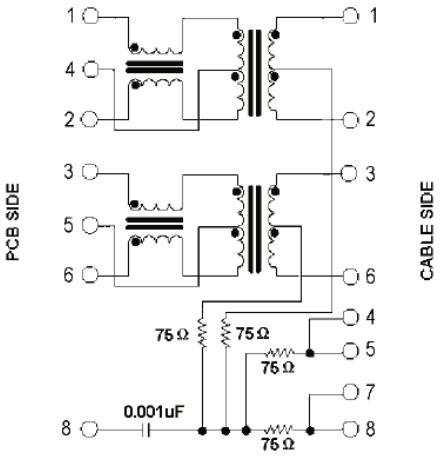

SAV

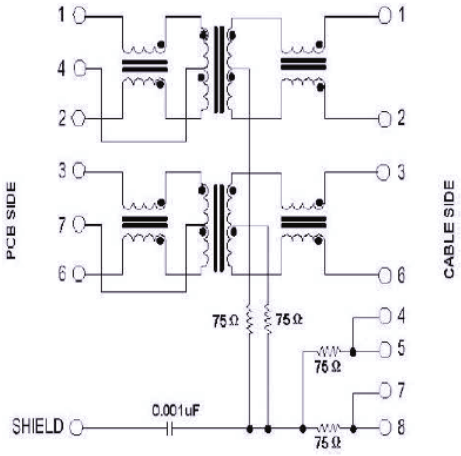

SAW

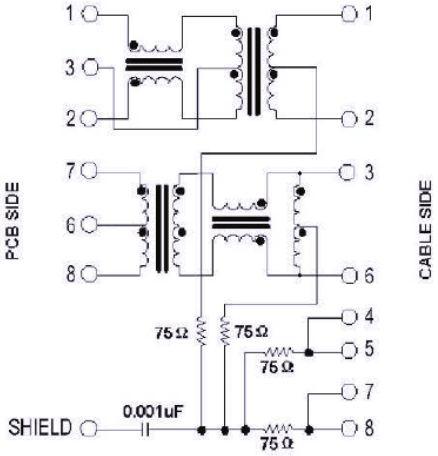

SAX

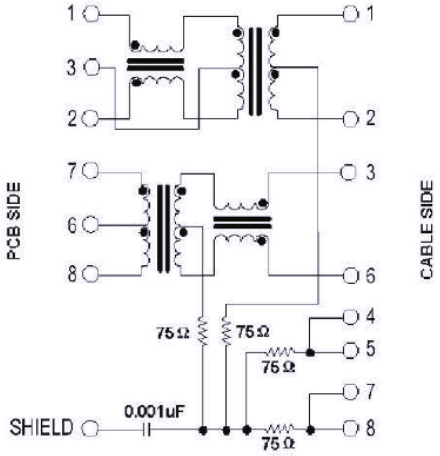

SAY

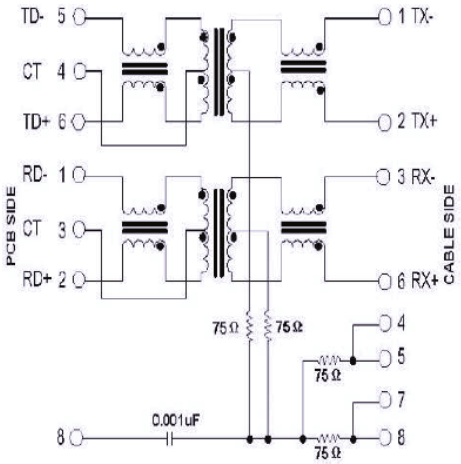

SAZ

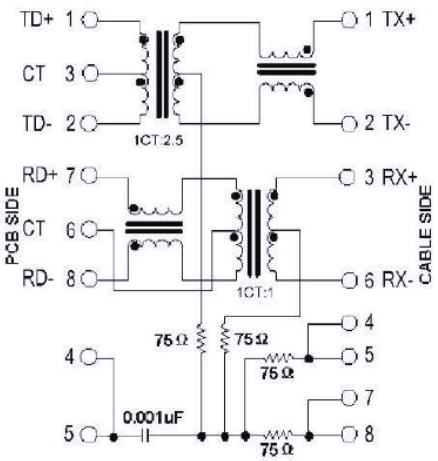

SBA

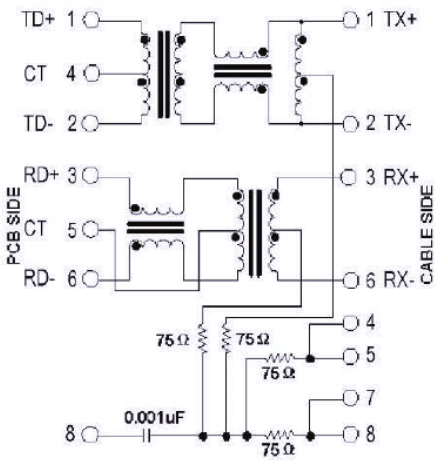

30332 Esperanza, Rancho Santa Margarita, California 92688
tel 949-546-8000 | fax 949-546-8001 | www.abracon.com

RJ45 10/100 Base-T Jack with Magnetic Module

ARJ11B

RoHS Compliant

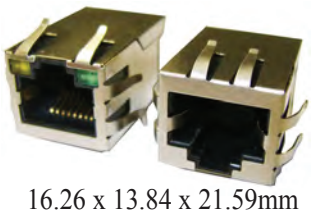

16.26 x 13.84 x 21.59mm

SCHEMATICS

SBB

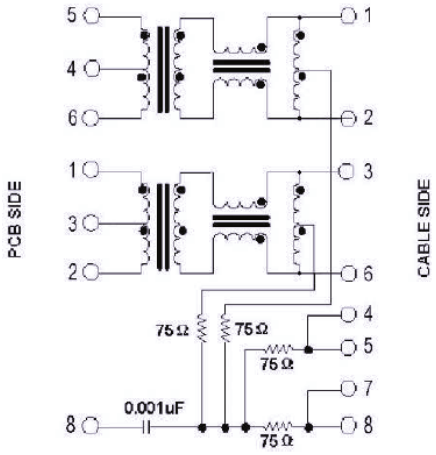

SBC

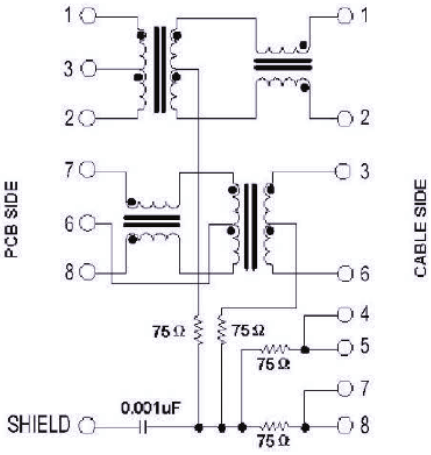

SBD

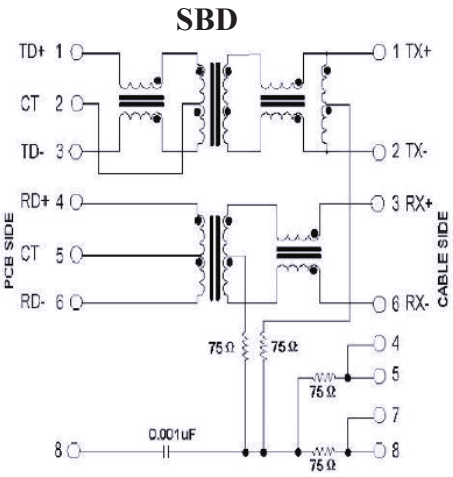

SBE

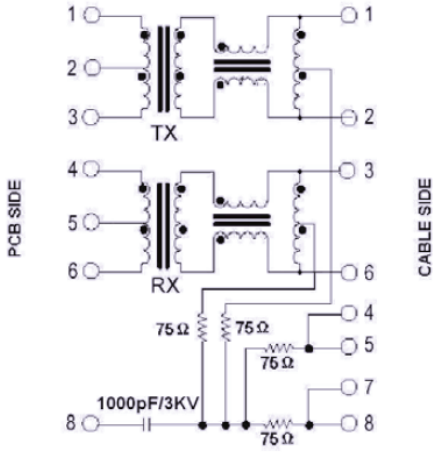

SBF

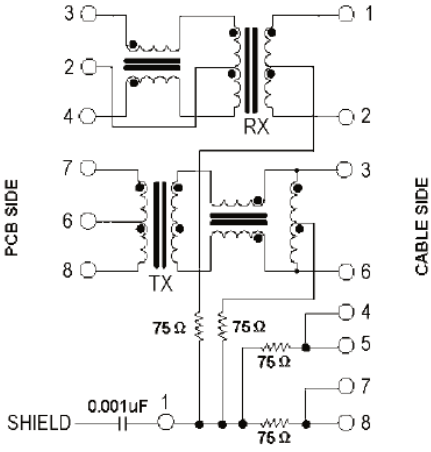

SBG

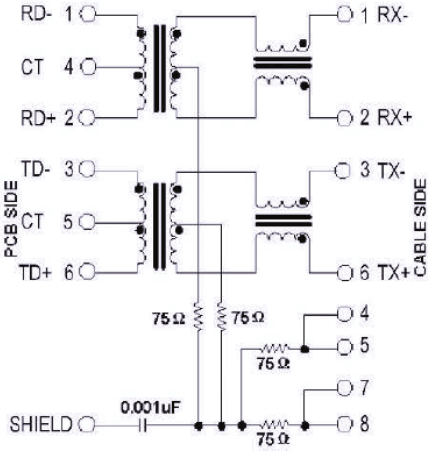

SBH

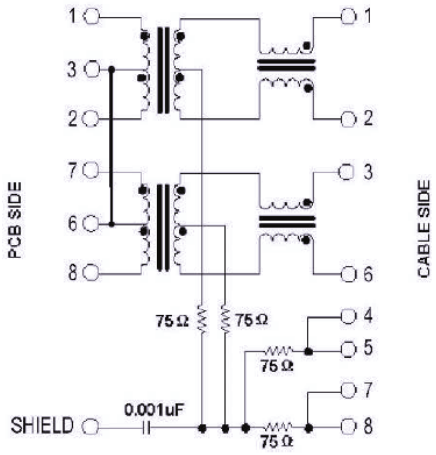

SBI

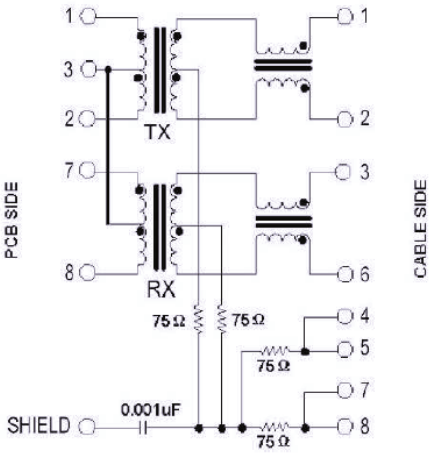

SBJ

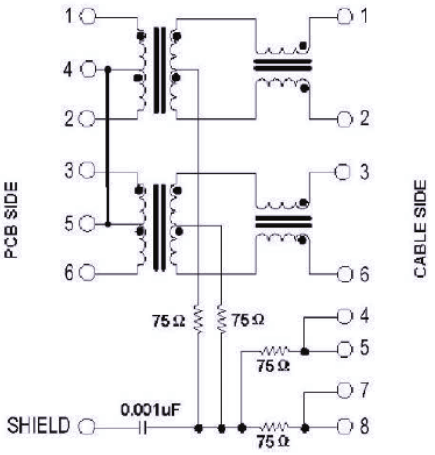

30332 Esperanza, Rancho Santa Margarita, California 92688
tel 949-546-8000 | fax 949-546-8001 | www.abracon.com

RJ45 10/100 Base-T Jack with Magnetic Module

ARJ11B

RoHS Compliant

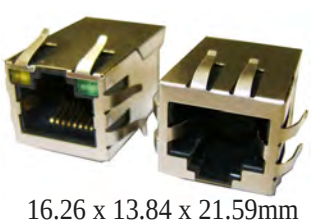

16.26 x 13.84 x 21.59mm

SCHEMATICS

SBK

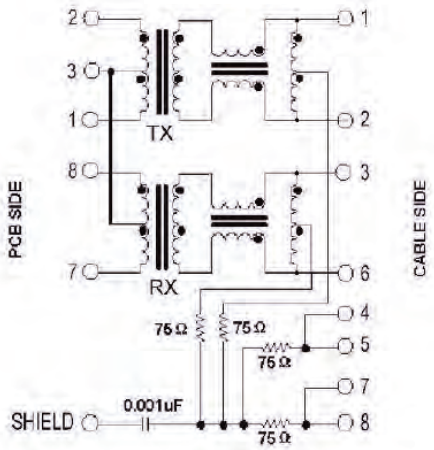

SBL

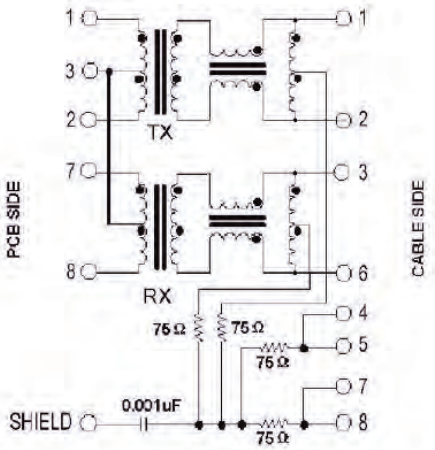

SBM

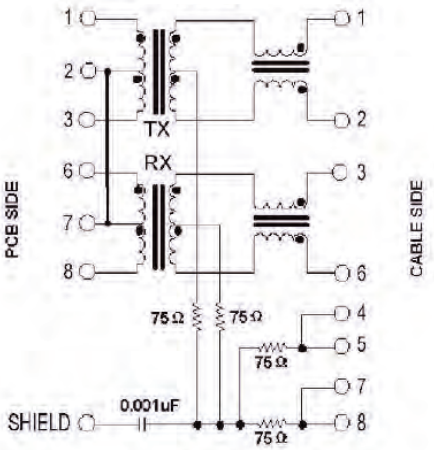

SBN

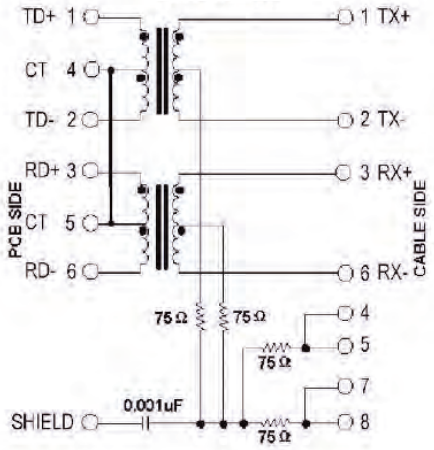

SBO

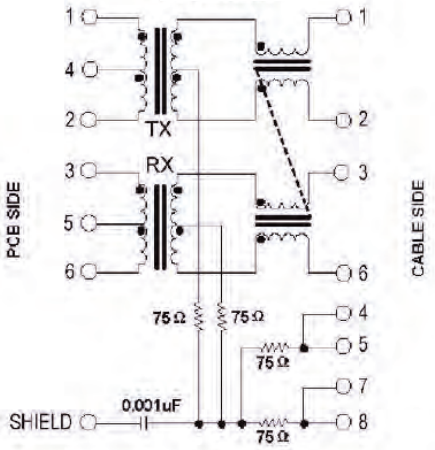

SBP

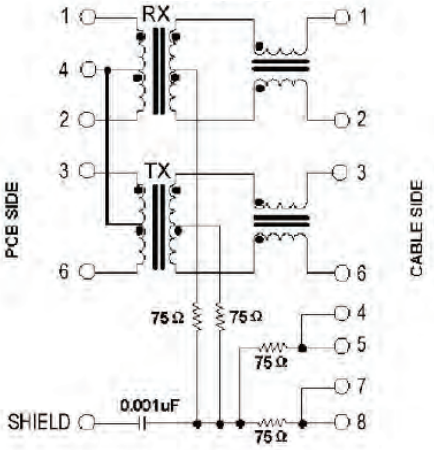

SBQ

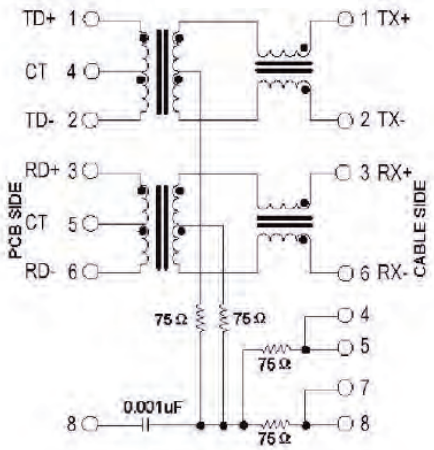

SBR

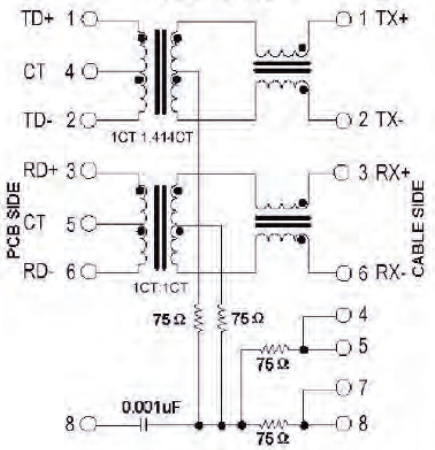

SBS

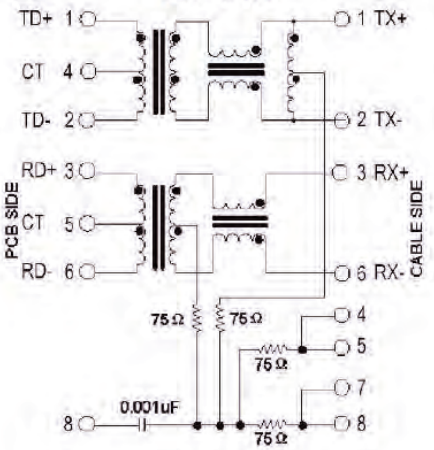

30332 Esperanza, Rancho Santa Margarita, California 92688
tel 949-546-8000 | fax 949-546-8001 | www.abracon.com

RJ45 10/100 Base-T Jack with Magnetic Module

ARJ11B

RoHS Compliant

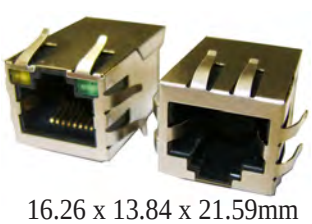

16.26 x 13.84 x 21.59mm

SCHEMATICS

SBT

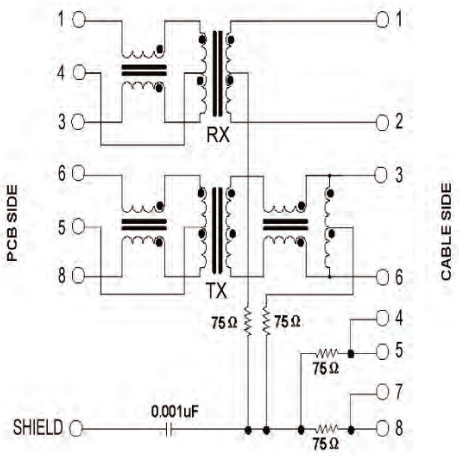

SBU

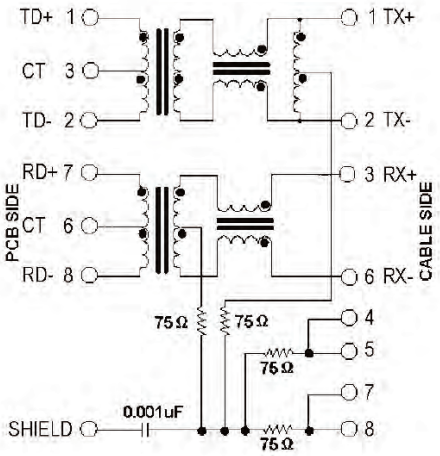

SBV

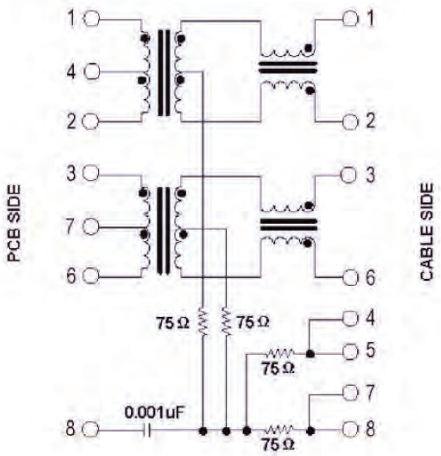

SBW

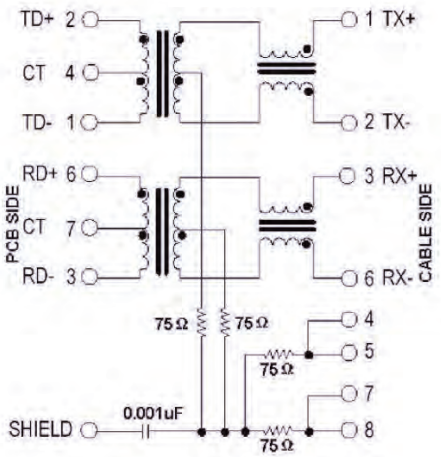

SBX

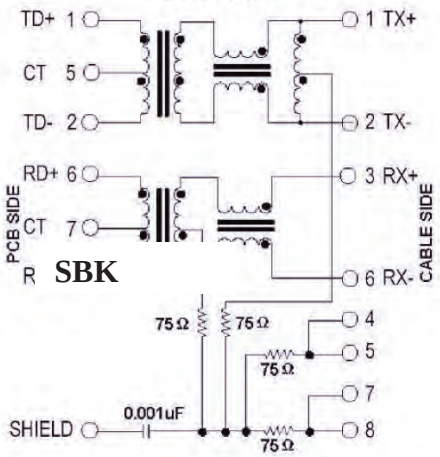

SBY

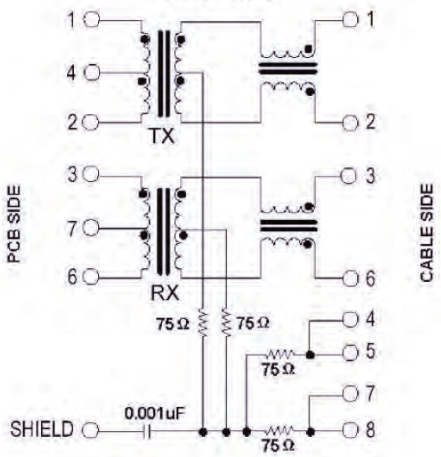

SBZ

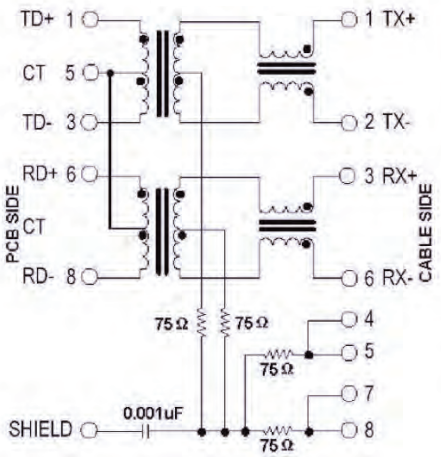

SCA

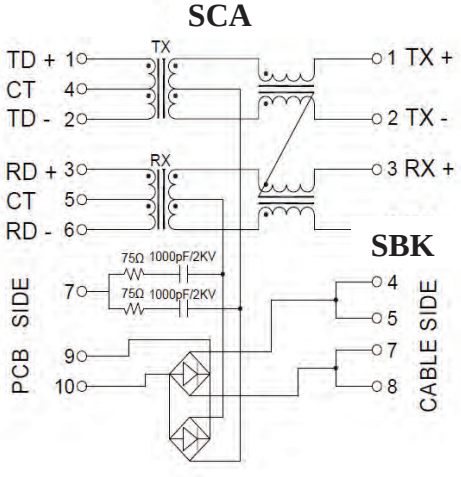

SCB

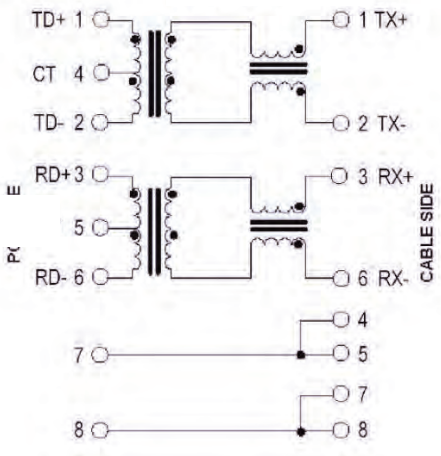

30332 Esperanza, Rancho Santa Margarita, California 92688
tel 949-546-8000 | fax 949-546-8001 | www.abracon.com

RJ45 10/100 Base-T Jack with Magnetic Module

ARJ11B

RoHS
Compliant



16.26 x 13.84 x 21.59mm

SCHEMATICS

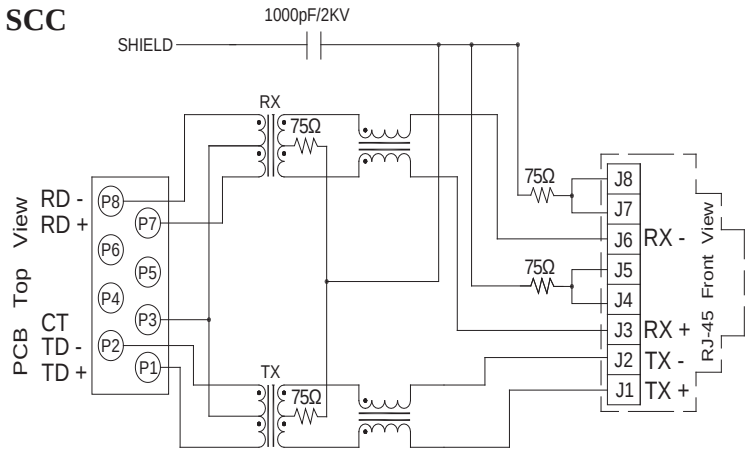

LED POLARITY

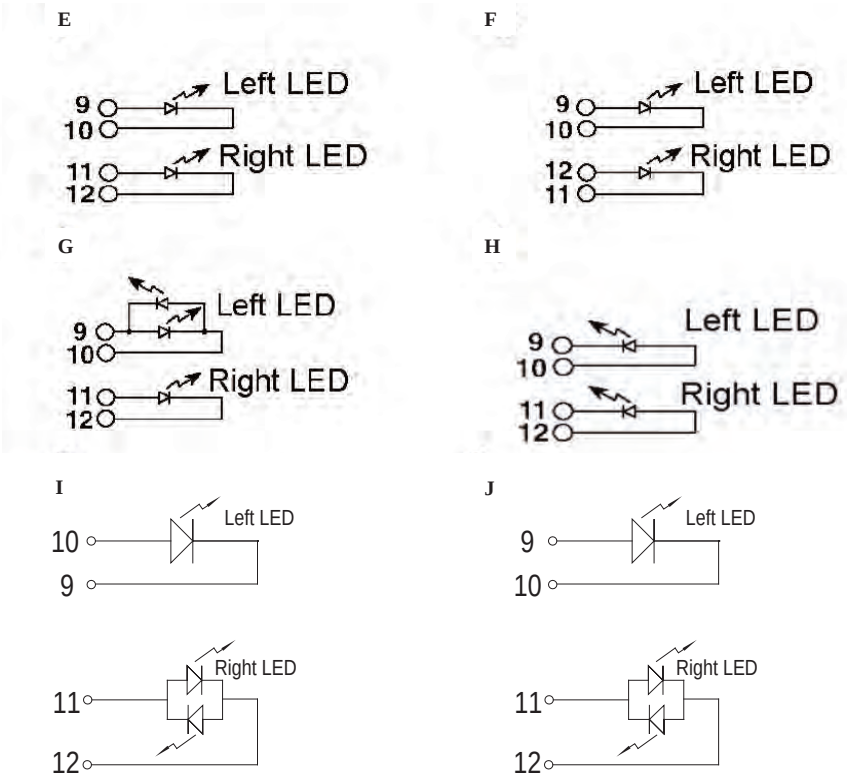

Vin=2.1Vdc TYP. **2.5Vdc MAX.**

30332 Esperanza, Rancho Santa Margarita, California 92688
tel 949-546-8000 | fax 949-546-8001 | www.abracon.com

RJ45 10/100 Base-T Jack with Magnetic Module

ARJ11B

RoHS
Compliant

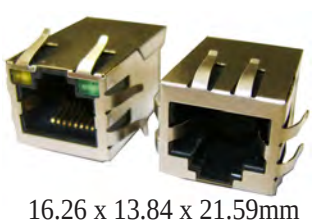

16.26 x 13.84 x 21.59mm

REFLOW PROFILE

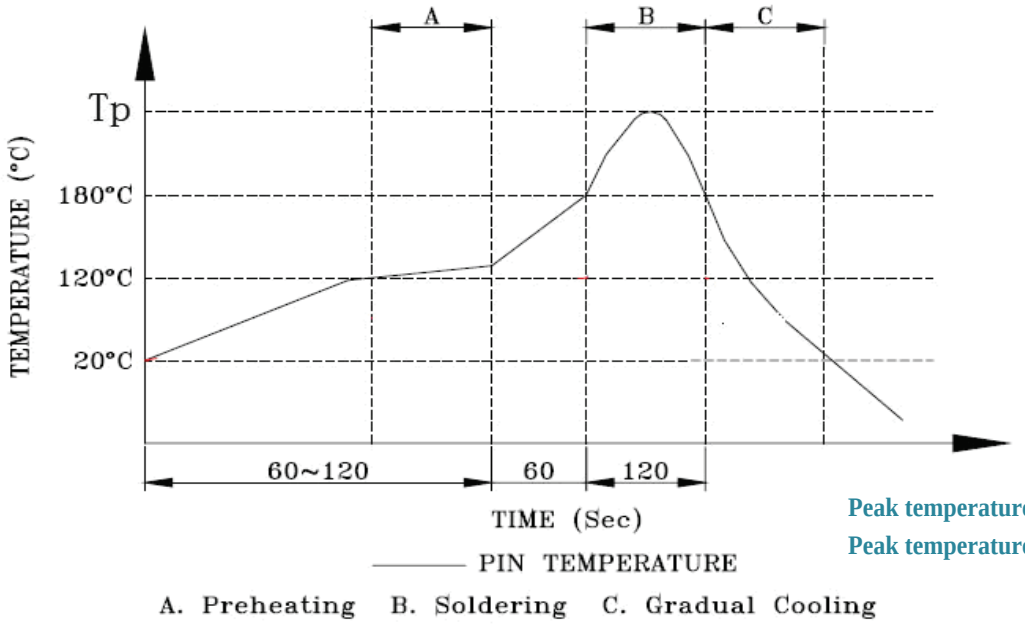

A. Preheating B. Soldering C. Gradual Cooling

Peak temperature(Tp) : 250 ± 10℃
Peak temperature(Tp) time : 5sec max

TAPE & REEL:

Packing 60pcs/tray
Packaging material: PET

Outer carton unit 1320 pcs/ 22 Trays/box

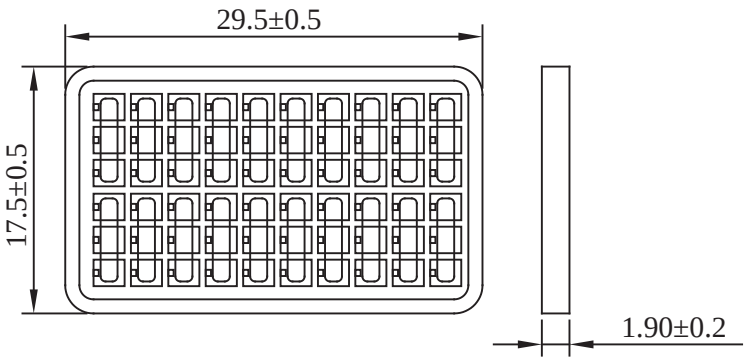

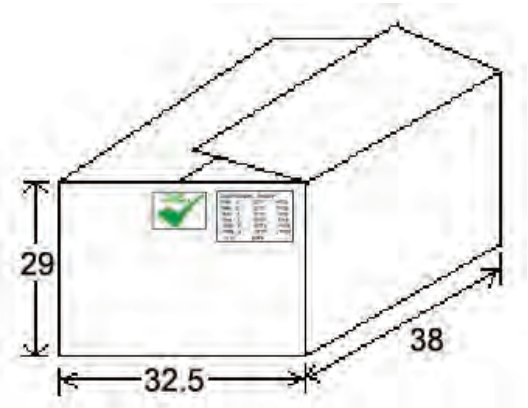

Dimensions: cm

ATTENTION: Abracon Corporation's products are COTS – Commercial-Off-The-Shelf products; suitable for Commercial, Industrial and, where designated, Automotive Applications. Abracon's products are not specifically designed for Military, Aviation, Aerospace, Life-dependant Medical applications or any application requiring high reliability where component failure could result in loss of life and/or property. For applications requiring high reliability and/or presenting an extreme operating environment, written consent and authorization from Abracon Corporation is required. Please contact Abracon Corporation for more information.

30332 Esperanza, Rancho Santa Margarita, California 92688
tel 949-546-8000 | fax 949-546-8001 | www.abracon.com