RJ45 1000 Base-T / Dual USB Combo Jack, w/ LEDs, Ext Temp

ARJ-150C

RoHS/RoHS II Compliant



18.85 x 27.40 x 30.52mm

FEATURES:

- Compliant with IEEE802.3ab standard
- Tab up RJ45 Jack + 2USB Combo
- High performance for maximum EMI suppression
- 350µH minimum OCL with 8mA bias current
- RoHS peak wave solder temperature 260°C

APPLICATIONS:

- Support 1000 Base-T applications w/ Bi-Color LEDs
- Extended Temperature (-40°C~85°C)
- Network Interface Cards(NIC), LAN-on-Motherboard(LOM) and PC
- Suitable CAT 3, 5e & 6 cable and UTP
- Provides signal conditioning, EMI suppression and signal isolation

STANDARD SPECIFICATIONS

Parameters	Minimum	Typical	Maximum	Units	Notes
Operating Temperature	-40		+85	°C	
Storage Temperature	-40		+85	°C	
Turn Ratio (± 5%)	1CT:1CT				Tx
	1CT:1CT				Rx
Inductance (OCL)	350			µH	100KHz/0.1V@8mA
Insertion Loss			-1.0	dB	1-100MHz
Return Loss		-20		dB	1-10MHz
		-16			30MHz
		-12			60-80MHz
Cross Talk	-40			dB	1-10MHz
	-35				32-60MHz
	-30				60-100MHz
CMR		-30		dB	1-50MHz
		-20			50-130MHz
Hi-Pot	1500Vrms/1mA/1Sec				Pri to Sec

SCHEMATICS

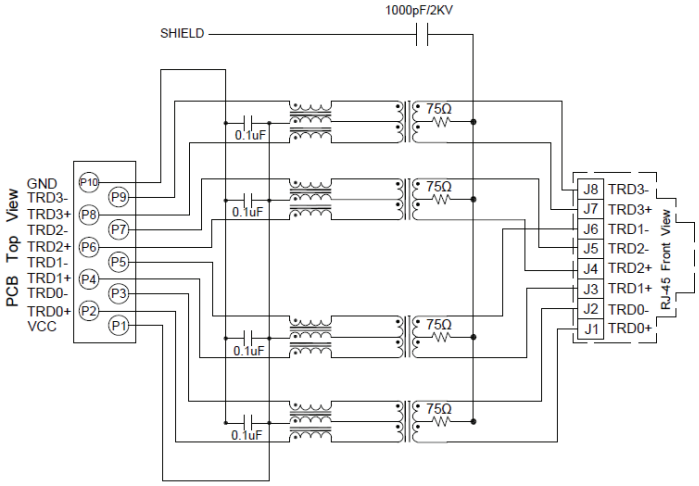



Standard LED	Wavelength	Forward*V(MAX)	TYP
Green	565nm	2.5v	2.2v
Yellow	585nm	2.5v	2.1v
Orange	610nm	2.5v	2.1v

With a forward current of 20mA

2 Faraday, Suite# B | Irvine | CA 92618 **Revised: 06.30.15**
Ph. 949.546.8000 | Fax. 949.546.8001
Visit www.abracon.com for Terms and Conditions of Sale

RJ45 1000 Base-T / Dual USB Combo Jack, w/ LEDs, Ext Temp

ARJ-150C

RoHS Compliant



18.85 x 27.40 x 30.52mm

MECHANICAL DIMENSIONS

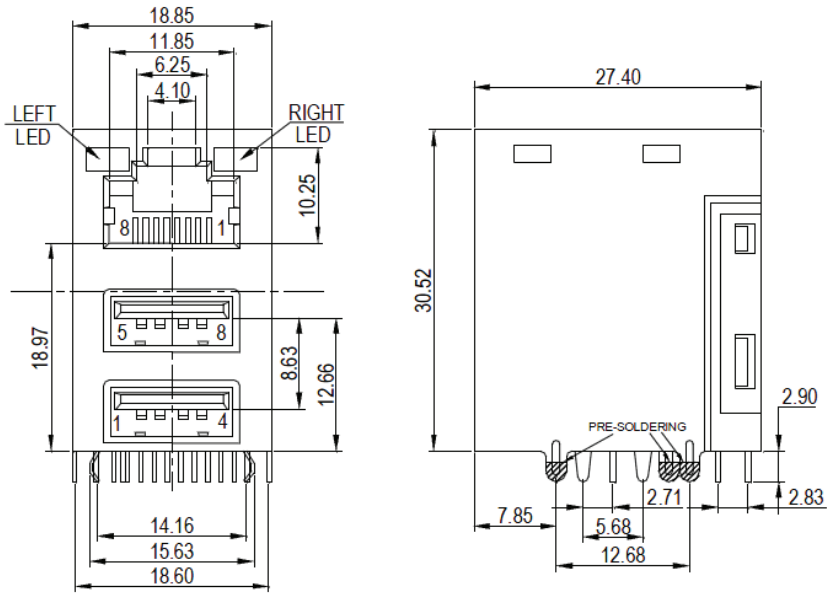

Recommended PCB Layout
Component Side Shown

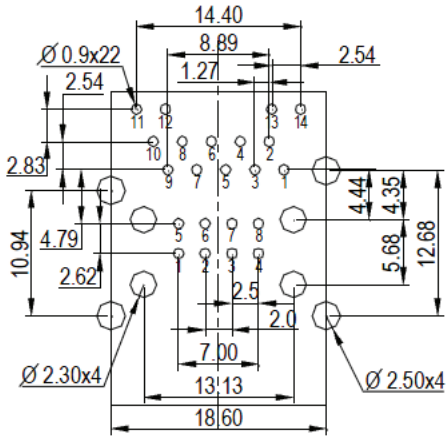

Dimensions: mm (Unless otherwise specified, tolerances are ± 0.25)

WAVE SOLDERING PROFILE

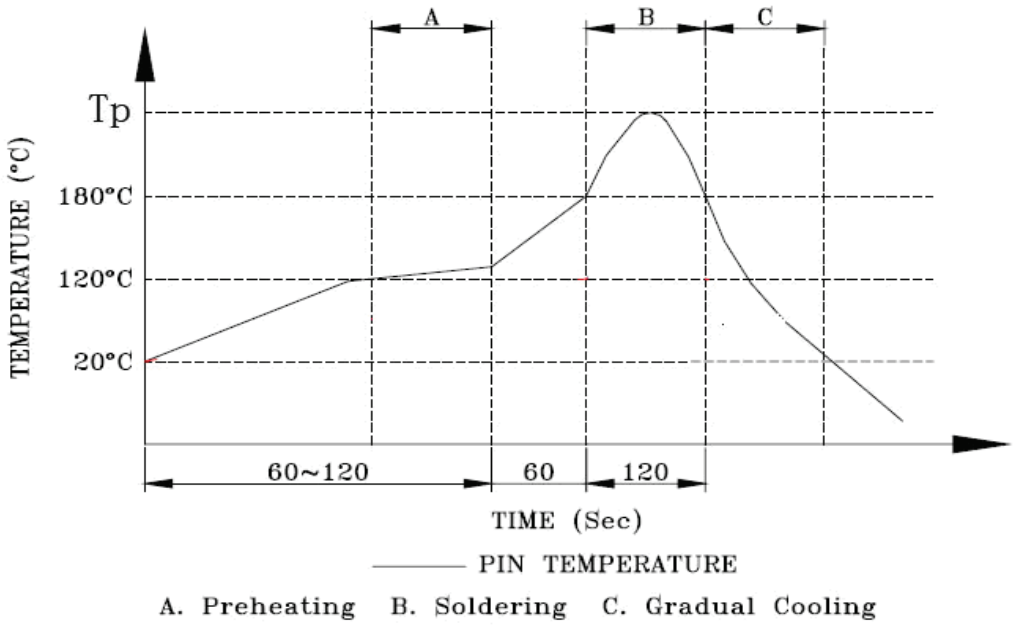

Peak temperature (Tp) : 250± 10°C
Peak temperature (Tp) time : 5sec max

RJ45 1000 Base-T / Dual USB Combo Jack, w/ LEDs, Ext Temp

ARJ-150C

RoHS
Compliant



18.85 x 27.40 x 30.52mm

PACKING: 44pcs/tray

Packaging 40pcs/tray

Packaging Material: PET

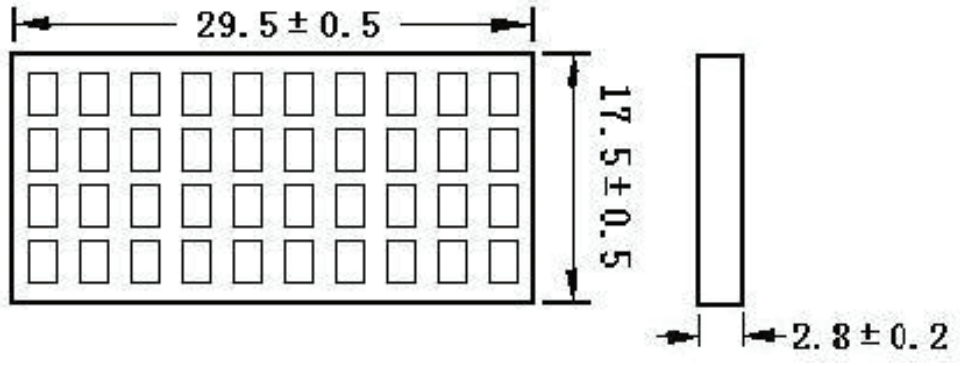

Outer carton unit (optional): 640 pcs/16 trays/box

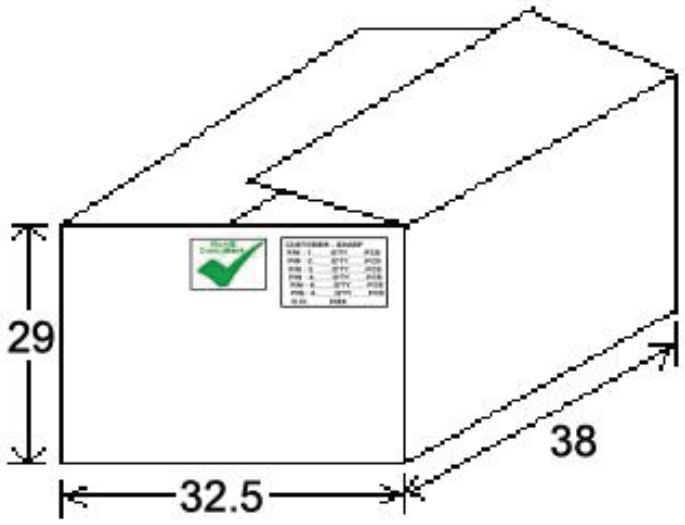

Dimensions: cm

ATTENTION: Abracon Corporation's products are COTS – Commercial-Off-The-Shelf products; suitable for Commercial, Industrial and, where designated, Automotive Applications. Abracon's products are not specifically designed for Military, Aviation, Aerospace, Life-dependant Medical applications or any application requiring high reliability where component failure could result in loss of life and/or property. For applications requiring high reliability and/or presenting an extreme operating environment, written consent and authorization from Abracon Corporation is required. Please contact Abracon Corporation for more information.