ADVANCED POWER TECHNOLOGY®

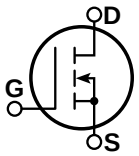

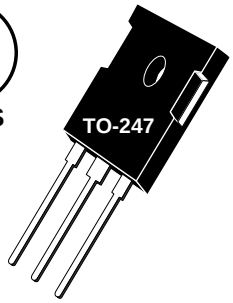

ARF460A
ARF460B

Common
Source

RF POWER MOSFETs

N-CHANNEL ENHANCEMENT MODE

125V 150W 65MHz

The ARF460A and ARF460B comprise a symmetric pair of common source RF power transistors designed for push-pull scientific, commercial, medical and industrial RF power amplifier applications up to 65 MHz. They have been optimized for both linear and high efficiency classes of operation.

- **Specified 125 Volt, 40.68 MHz Characteristics:**
  - **Output Power = 150 Watts.**
  - **Gain = 13dB (Class AB)**
  - **Efficiency = 75% (Class C)**
- **Low Cost Common Source RF Package.**
- **Low Vth thermal coefficient.**
- **Low Thermal Resistance.**
- **Optimized SOA for Superior Ruggedness.**

MAXIMUM RATINGS All Ratings: T_C = 25°C unless otherwise specified.

Symbol	Parameter	ARF460A/B	UNIT
V_{DSS}	Drain-Source Voltage	500	Volts
V_{DGO}	Drain-Gate Voltage	500	
I_D	Continuous Drain Current @ T_C = 25°C	14	Amps
V_{GS}	Gate-Source Voltage	±30	Volts
P_D	Total Power Dissipation @ T_C = 25°C	250	Watts
$R_{\theta JC}$	Junction to Case	0.50	°C/W
T_J,T_{STG}	Operating and Storage Junction Temperature Range	-55 to 150	°C
T_L	Lead Temperature: 0.063" from Case for 10 Sec.	300	

STATIC ELECTRICAL CHARACTERISTICS

Symbol	Characteristic / Test Conditions	MIN	TYP	MAX	UNIT
BV_{DSS}	Drain-Source Breakdown Voltage (V_{GS} = 0V, I_D = 250 µA)	500			Volts
V_{DS}(ON)	On State Drain Voltage ① (I_D(ON) = 7A, V_{GS} = 10V)			4	
I_{DSS}	Zero Gate Voltage Drain Current (V_{DS} = V_{DSS}, V_{GS} = 0V)			25	µA
	Zero Gate Voltage Drain Current (V_{DS} = 0.8 V_{DSS}, V_{GS} = 0V, T_C = 125°C)			250	
I_{GSS}	Gate-Source Leakage Current (V_{GS} = ±30V, V_{DS} = 0V)			±100	nA
g_{fs}	Forward Transconductance (V_{DS} = 25V, I_D = 7A)	3.3	5.5	8	mhos
V_{GS}(TH)	Gate Threshold Voltage (V_{DS} = V_{GS}, I_D = 50mA)	3		5	Volts

CAUTION: These Devices are Sensitive to Electrostatic Discharge. Proper Handling Procedures Should Be Followed.

APT Website - http://www.advancedpower.com

050-5966 Rev D 7-2003

DYNAMIC CHARACTERISTICS

ARF460A/B

Symbol	Characteristic	Test Conditions	MIN	TYP	MAX	UNIT
C_{iss}	Input Capacitance	V_{GS} = 0V V_{DS} = 150V f = 1 MHz		1200	1400	pF
C_{oss}	Output Capacitance			150	300	
C_{rss}	Reverse Transfer Capacitance			60	100	
$t_{d(on)}$	Turn-on Delay Time	V_{GS} = 15V V_{DD} = 0.5 V_{DSS} I_D = $I_{D[Cont.]}$ @ 25°C R_G = 1.6Ω		7		ns
t_r	Rise Time			6		
$t_{d(off)}$	Turn-off Delay Time			20		
t_f	Fall Time			4.4		

FUNCTIONAL CHARACTERISTICS

Symbol	Characteristic	Test Conditions	MIN	TYP	MAX	UNIT
G_{PS}	Common Source Amplifier Power Gain	f = 40.68 MHz V_{GS} = 0V V_{DD} = 125V P_{out} = 150W	13	15		dB
η	Drain Efficiency		70	75		%
ψ	Electrical Ruggedness VSWR 10:1		No Degradation in Output Power			

① Pulse Test: Pulse width < 380 μS, Duty Cycle < 2%

APT Reserves the right to change, without notice, the specifications and information contained herein.

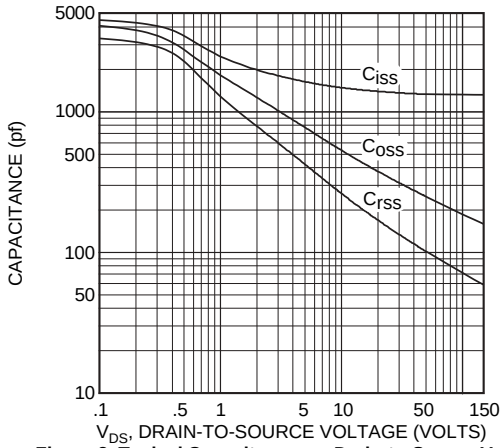

Figure 2, Typical Capacitance vs. Drain-to-Source Voltage

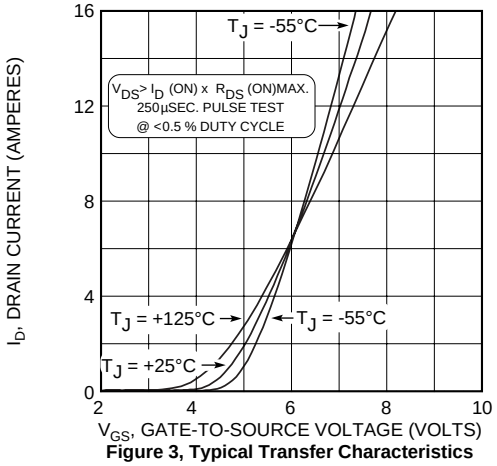

Figure 3, Typical Transfer Characteristics

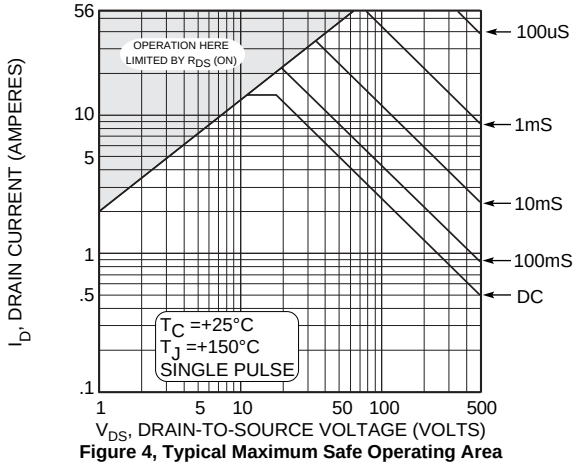

Figure 4, Typical Maximum Safe Operating Area

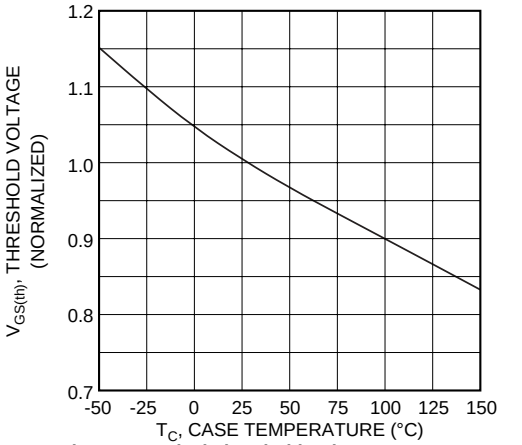

Figure 5, Typical Threshold Voltage vs Temperature

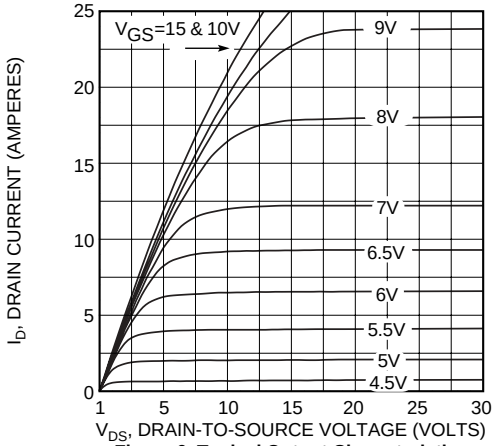

Figure 6, Typical Output Characteristics

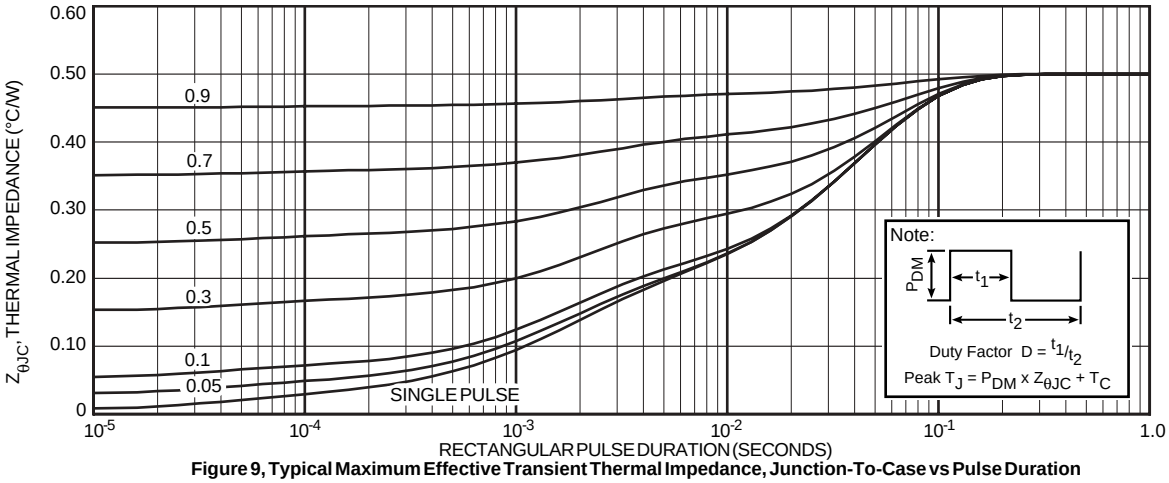

Figure 9, Typical Maximum Effective Transient Thermal Impedance, Junction-To-Case vs Pulse Duration

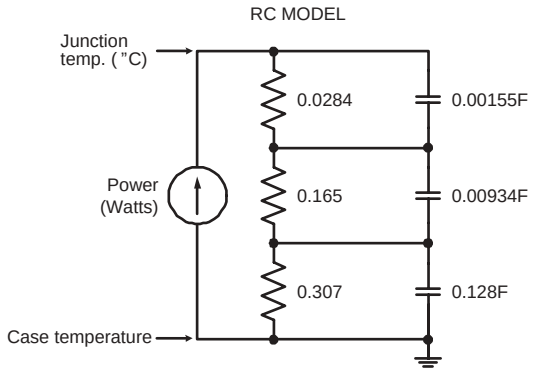

Figure 9a, TRANSIENT THERMAL IMPEDANCE MODEL

Table 1 - Typical Class AB Large Signal Input - Output Impedance

Freq. (MHz)	Z_{in} (Ω)	Z_{OL} (Ω)
2.0	20.9 - j 9.2	38 - j 2.6
13.5	2.4 - j 6.8	31 - j 14
27	.57 - j 2.6	19.6 - j 17.6
40	.31 - j 0.5	12.5 - j 15.8
65	.44 + j 1.9	6.0 - j 10.5

Z_{in} - Gate shunted with 25Ω□□ I_{DQ} = 100mA
Z_{OL} - Conjugate of optimum load for 150 Watts output at V_{dd} = 125V

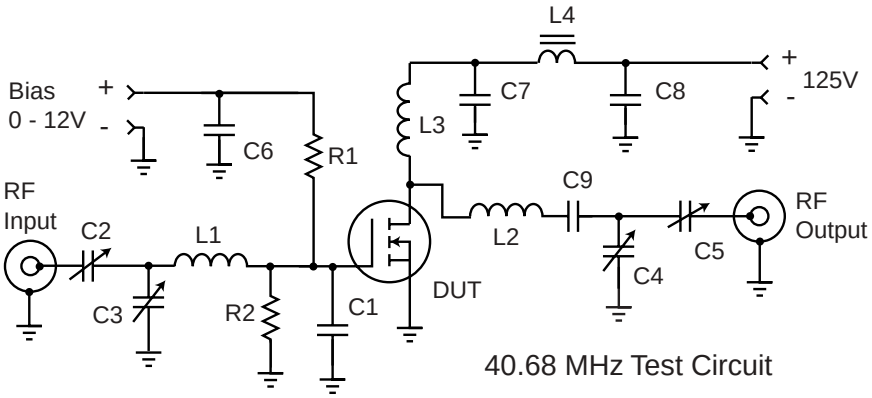

40.68 MHz Test Circuit

C1 -- 2000 pF 100V NPO chip mounted at gate lead
C2-C5 -- Arco 463 Mica trimmer
C6-C8 -- .1 μF 500V ceramic chip
C9 -- 2200 pF 500V chip
L1 -- 4t #20 AWG .25"ID .3 "L ~80nH
L2 -- 6t #16 AWG .312" ID .4"L ~185nH
L3 -- 15t #24 AWG .25"ID ~.85uH
L4 -- VK200-4B ferrite choke 3uH
R1-R2 -- 51 Ohm 0.5W Carbon
DUT = ARF460A/B

TO-247 Package Outline

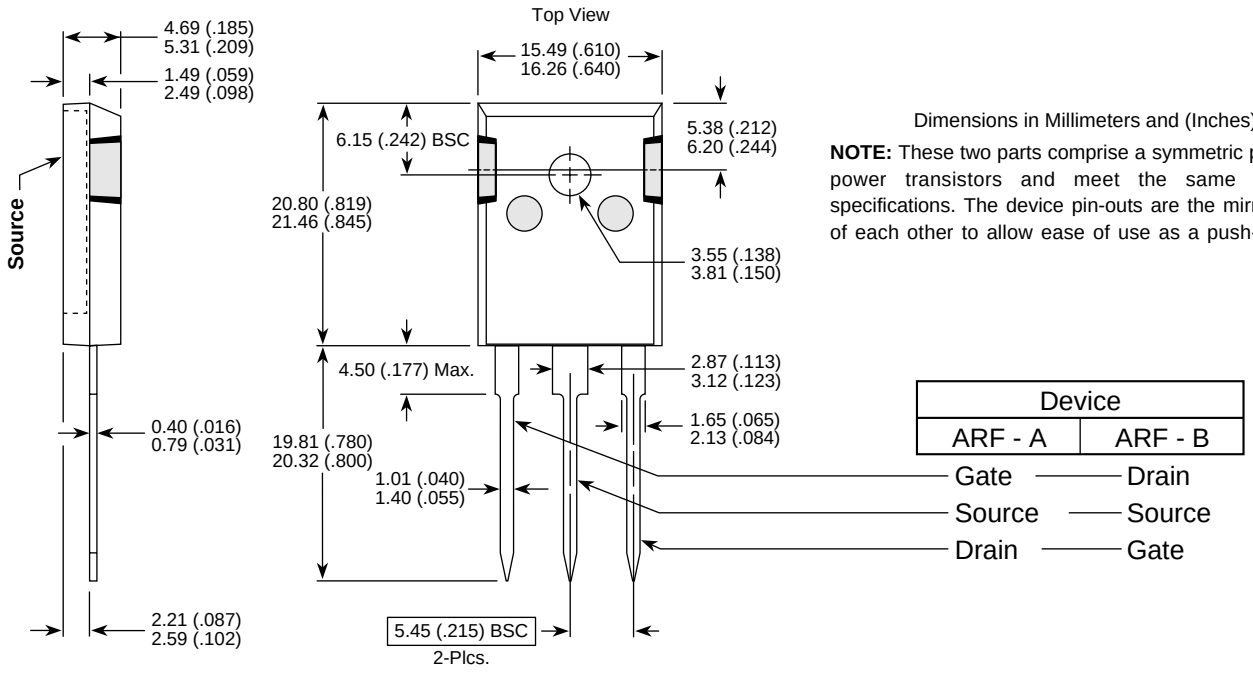

Dimensions in Millimeters and (Inches)

NOTE: These two parts comprise a symmetric pair of RF power transistors and meet the same electrical specifications. The device pin-outs are the mirror image of each other to allow ease of use as a push-pull pair.

Device	
ARF - A	ARF - B
Gate	Drain
Source	Source
Drain	Gate

APT's products are covered by one or more of U.S.patents 4,895,810 5,045,903 5,089,434 5,182,234 5,019,522 5,262,336 6,503,786 5,256,583 4,748,103 5,283,202 5,231,474 5,434,095 5,528,058 and foreign patents. US and Foreign patents pending. All Rights Reserved.